Access and Parking

Access to the City's industrial park from Highway 29 South is via Dowdell Lane east. The subject property fronts onto Dowdell Lane, a City-maintained street.

Parking for residences is adjacent to each of the houses. There is a parking area next to the structures earmarked for the commercial kitchen and storage, and a parking area next to the winery. These parking areas will accommodate a total of six parking spaces, which are not proposed for paving in an effort to minimize the impervious areas on-site. There is one ADA-accessible parking space proposed, in proximity to the main residence, and this parking space will be paved and striped as per regulation.

DELTA CONSULTING & ENGINEERING
OF ST. HELENA

Item No: 5.5

THEORETICAL
WATER USE REPORT

FOR THE

REDMON RANCH WINERY

LOCATED AT

867 DOWDELL LANE
ST. HELENA, CA 94574

COUNTY: NAPA

INITIAL SUBMITTAL: AUGUST 28, 2015

PREPARED FOR REVIEW BY:
CITY OF ST. HELENA DEPARTMENT OF PUBLIC WORKS
1480 MAIN STREET
ST. HELENA, CA 94574

1104 ADAMS STREET, SUITE 203, ST. HELENA, CALIFORNIA 94574
707-963-8456 TELE + WWW.DELTACIVIL.COM 707-963-8528 FAX

TABLE OF CONTENTS

TABLE OF CONTENTS		I
I.	BACKGROUND & INTRODUCTION	- 1 -
II.	WATER-USE ANALYSIS	- 2 -
III.	CONCLUSION	- 4 -

I. BACKGROUND & INTRODUCTION

Redmon Ranch Winery proposes to remodel and relocate some of the existing buildings and add new buildings to the property located at 867 Dowdwell Lane in St. Helena. The City of St. Helena has passed an ordinance that requires all projects to be water neutral. This means the post-construction water use of the property must be less than or equal to the pre-construction water use.

The current use of the Redmon Ranch property is a residential property for a total of five bedrooms. The property has a main residence, a second dwelling and a guest bedroom building. Additionally, the property also has a barn, storage building, garage, and a well. The main residence and second dwelling units will remain unchanged for this project. All existing external water use for the landscaping is from the existing well and will remain unchanged.

Redmon Ranch Winery proposes to remodel and relocate the following: the existing barn to a barrel storage building, the guest bedroom building to an adjacent dry storage building, the storage building #1 to a winery storage building, and the garage to a commercial kitchen and dry storage building. Additionally, the project proposes to add a new covered fermentation structure and a new winery storage/commercial kitchen building. With the new winery structures, the owner anticipates producing 24,000 gallons of wine a year, preparing 500 meals from the commercial kitchen on a weekly basis to be sold off-site, and hiring three full-time and three part-time employees to assist with all wine production and food related activities. See Appendix A for the proposed site plan prepared by Paul Kelly Architect. All process water use related to the winery production will be from the existing well and all domestic water use will be from the City of St. Helena municipal water system.

Because the winery's process water use and all landscaping water use is from the existing well, the report's analysis will focus on the internal domestic water use for the residential units and the internal domestic water use for the winery and food production facilities.

II. WATER-USE ANALYSIS

A. Baseline Water Use

As mentioned earlier, the existing external water use will remain the same. As a result, the water use baseline will only consist of the domestic internal water use.

The existing domestic water flows for the property are derived within the existing three building residential buildings that have a total of five bedrooms. According to the current St. Helena Water Policy, the existing internal baseline flow for the property are able to be estimated using the Napa County Department of Environmental Management (NCDEM) Regulations for Design, Construction, and Installation of Alternative Sewage Treatment Systems. These regulations specify the demand effluent flow for a residence as 150 gallons per day. See the table below for the annual baseline water use:

ESTIMATED BASLELINE WATER USE

	Gallons		Acre Feet
	Daily	Annual	Annual
Internal	750	273,750	0.84
Total	**750**	**273,750**	**0.84**

Based on the above table, the existing baseline water use is approximately 750 gallons per day or 0.84 acre-feet of water per year.

B. Proposed Water Demand with Water Reduction Measures

Redmon Ranch Winery proposes to use the commercial kitchen to prepare meals to be sold at an off-site location. Based on the Napa County Department of Environmental Management, the estimated water water use is five gallons per meal served (See Appendix B). For the purpose of the report, it is assumed that Redmon Ranch Winery prepares up to 500 meals a week for a total annualized average water use of 356 gallons per day.

Redmon Ranch Winery will also install low flow water efficient bathroom fixtures and waterless urinals in the new winery lab and winery office/commercial kitchen to help offset the increased water usage. Based on the marketing plan, Redmon Ranch Winery will hire three full-time employees and three part-time employees. See Appendix C for more information on the low flow water efficient fixtures proposed.

The proposed site plan will not change the main residence and second dwelling which has a total of four bedrooms. This report estimates that 8 people will be living in the two residences. The daily and annual water demands for the entire property after construction is completed are able to be estimated as follows:

PROPOSED DAILY WATER USE

RESIDENCE	Average Flow	Duration	Daily Use	Occupants	Servings per week	Total Daily Water Use	Total Annual Water Use	Total Annual Water Use
Low Flow Toilet	1.3 gal		3	6		23 gal	8410 gal	0.03 af
Waterless Urinal	0.0 gal		3	2		0 gal	0 gal	0.00 af
Low Flow Lavatory Faucet	1.5 gpm	0.25 min	3	8		9 gal	3285 gal	0.01 af
Kitchen Faucet	2.2 gpm	4 min	1	8		70 gal	25696 gal	0.08 af
Low Flow Shower Head	1.5 gpm	8 min	1	8		96 gal	35040 gal	0.11 af
Bath	22 gal		0.1	8		18 gal	6424 gal	0.02 af
Clothes Washer	12 gal per load		0.37	8		36 gal	12965 gal	0.04 af
Dish Washer	4 gal per cycle		0.1	8		3 gal	1168 gal	0.00 af
COMMERCIAL								
Low Flow Lavatory Faucet	1.5 gpm	0.25 min	3	6		7 gal	2464 gal	0.01 af
Low Flow Lavatory Toilet	1.28 gal		3	6		23 gal	8410 gal	0.03 af
Food preparation	5.00 gal				500	356 gal	130000 gal	0.40 af
Total						641 gal	233,861 gal	0.72 af

Utilizing the information above, the proposed water use for the property is estimated at 641 gallons per day or 0.72 acre-feet of water per year.

C. Existing and Proposed Water Demand Comparison

By adding a new commercial kitchen and storage and performing the remodels, Redmon Ranch Winery's water use will still be within the baseline water use. See the table below for the comparison between the existing and proposed water use.

REDMON RANCH WINERY WATER USE COMPARISION

	Gallons		Acre Feet
	Daily	Annual	Annual
Existing Water Use	750	273,750	0.84
Proposed Water Use	641	233,861	0.72
Water Savings	109	39,889	0.12

Redmon Ranch Winery's water use will remain water neutral by approximately 109 gallons per day.

III. CONCLUSION

The construction of the new winery related buildings and remodeling of the existing structures is not expected to increase the water-use on the property if the recommendations of this report are followed. Between the utilization of high efficiency toilets, and low-flow bathroom sinks, the post-construction water-use will be less than the pre-construction water-use and meet the City of Stain Helena's water neutral requirement.

APPENDIX A

Redmon Ranch Winery's Proposed Site Plan

Item No: 5.5

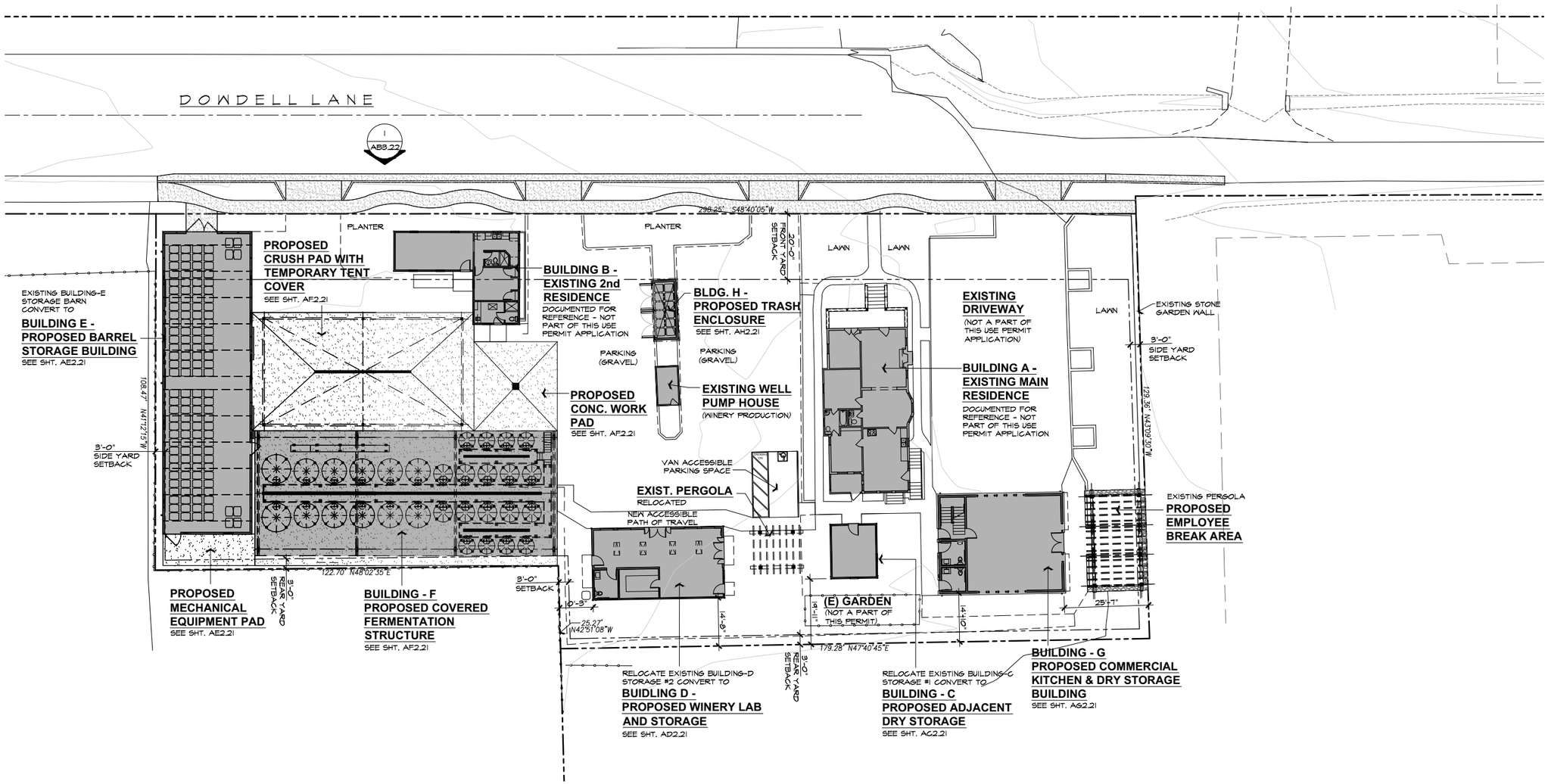

DRAWING HAS BEEN SCALED DOWN FROM ORIGINAL SIZE. SCALE NOT VALID.

A PROPOSED SITE PLAN

SCALE: 1/16" = 1'-0"

0 8 16 32 48 FEET

N TRUE NORTH

PAUL KELLEY ARCHITECT
1436 Second Street, No. 162, Napa, CA 94559
phone 707.257.1148 fax 707.266.1027
www.paulkelleyarchitecture.com

These drawings are the property of Paul Kelley Architect and have been prepared specifically for this project. These drawings are not to be used for any other project, by any other entity or in another location. Copyright 2015 Paul Kelley Architect, Inc.

Consultant:

A Proposed Winery for
Redmon Ranch Winery
867 Dowdell Ln., St. Helena, CA 94574
APN: 009-580-009

Seal:

REVISIONS

Date: July 16, 2015

Project No:

Sheet Title: PROPOSED SITE PLAN

Sheet #: A1.12

USE PERMIT SUBMITTAL

APPENDIX B

Napa County Department of Environmental Management Table 4

TABLE 4

TYPE OF OCCUPANCY	GALLONS PER DAY
Airports	5 per passenger
Campgrounds: Campground with central comfort station Campground with flush toilet, no showers Day Camps (no meals) Luxury Camp, private bath Summer and seasonal	 35 per person 25 per person 15 per person 100 per person 50 per person
Churches (sanctuary) With kitchen wastes	5 per seat 7 per seat
Country Club	125 per person
Factories	35 per person per shift
Hospitals Kitchen waste only Laundry waste only	250 per bed space 25 per bed 40 per bed
Hotels/Motels with private bathroom (no kitchen waste) Hotels/Motels without private bathroom (no kitchen waste) Hotel/Motel with private bath and kitchen	60 per two person room 50 per two person room 75 gallons per person
Institutions other than hospitals	125 per bed space
Movie Theaters	5 per seat
Offices	20 per employee
Picnic parks with toilets and showers Picnic parks with toilet waste only	10 per person 5 per person
Resort camps with limited plumbing	50 gallons per person
Restaurants: Kitchen waste (multi-use utensils)	 5 per meal served
Kitchen waste (disposable utensils) And add the following for type of facility present: Conventional sit down Short Order Bar and Cocktail	3 per meal served 10 per person 8 per person 3 per person
School (non-boarding With gym and showers add With cafeteria using disposable utensils	20 per student 5 per student 3 per meal served
Self service laundries	50 gallons per wash
Service station	10 gallons per vehicle served
Retail stores For public restrooms add	20 per employee 1 per 10 square feet
Swimming pools and bathhouses	10 per person
Tourist camps or mobile home parks with individual bath units Tourist camps or trailer parks with central bathhouse	100 per person 75 per person
Work or construction camps (semi-permanent)	50 per person
Wine tasting facility (no meals served)	3 per person
Employee	15 per employee

APPENDIX C

Water Efficient Product Information

Item No: 5.5

American Standard

Style That Works Better

HERITAGE

TWO-HANDLE 8" WIDESPREAD LAVATORY FAUCET

WITH GOOSENECK SPOUT

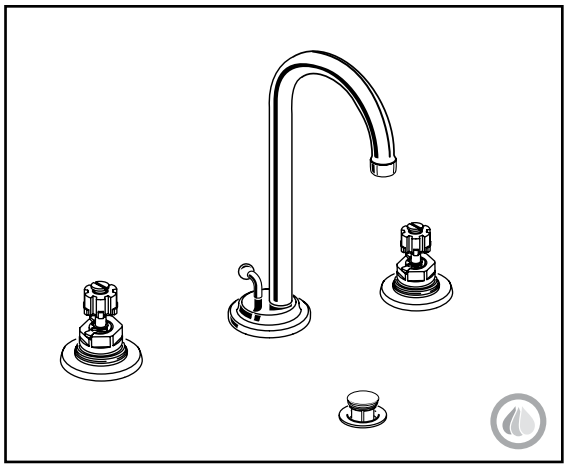

6831.000 Shown

MODEL NUMBER:

- **6830.000 8" Widespread Lavatory**
  Rigid gooseneck spout. 1.5 gpm pressure compensating aerator. Less drain. Less handles. Rigid copper connection.
- **6831.000 8" Widespread Lavatory**
  Rigid gooseneck spout. 1.5 gpm pressure compensating aerator. Pop-up drain. Less handles. Rigid copper connection.
- **6832.000 8" Widespread Lavatory**
  Rigid gooseneck spout. 1.5 gpm pressure compensating aerator. Grid strainer drain. Less handles. Rigid copper connection.

Handles must be ordered separately.

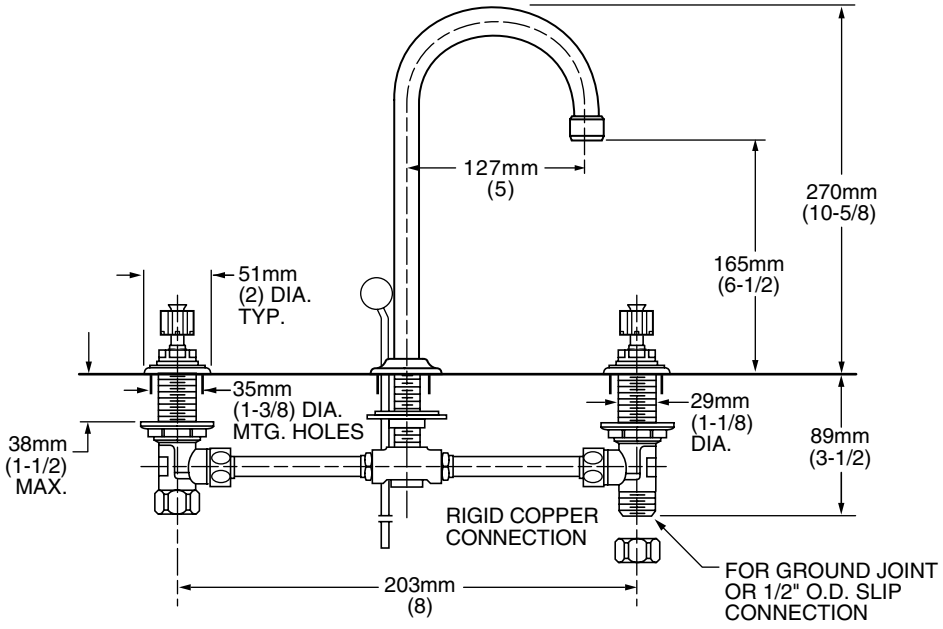

GENERAL DESCRIPTION:

Cast brass valve bodies with rigid copper 8" (203mm) connections. Amarilis 1/4 turn washerless ceramic disc valve cartridges. Fixed brass spout. One-half inch male inlet shanks with brass coupling nuts and shank nuts. All brass drain body (on applicable models) with 1-1/4" (32mm) tailpiece. 1.5gpm/5.7L/min. maximum flow rate.

PRODUCT FEATURES:

Pressure Compensating Aerator: Provides a constant water flow of 1.5 gpm throughout the pressure range.

Brass Construction: Durable - Excellent in high use applications. Ideal for prolonged contact with water.

Ceramic Disc Valve Cartridges: Assures a lifetime of drip-free performance.

Low Lead: Meets NSF Standard 61/Section 9 & Prop 65 lead requirements.

SUGGESTED SPECIFICATION:

Two handle widespread lavatory faucet shall feature cast brass valve bodies with 8" rigid copper connections. All brass shank nuts and coupling nuts. Shall feature water-conserving 1.5 gpm/5.7L/min. pressure compensating aerator. Shall also feature 1/4 turn washerless ceramic disc valve cartridges. Fitting shall be American Standard Model #680_.000.___ and handle kit # 0000.___.___.

© 2008 AS America Inc.

American Standard
Style That Works Better

HERITAGE

TWO-HANDLE 8" WIDESPREAD LAVATORY FAUCET

WITH GOOSENECK SPOUT

CODES AND STANDARDS

These products meet or exceed the following codes and standards:

ASME A112.18.1
CSA B 125
NSF 61/Section 9

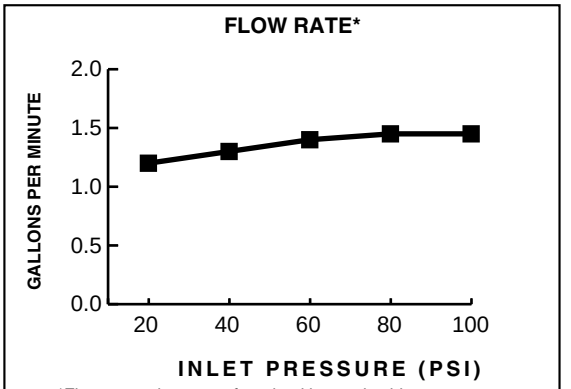

*Flow rates shown are for mixed hot and cold.

Product Number	Description	Finish: Polished Chrome 002
6830.000	Lavatory Faucet. 1.5 gpm/5.7L/min pressure compensating aerator. Less drain. Less handles.	
6831.000	Lavatory Faucet. 1.5 gpm/5.7L/min pressure compensating aerator. Pop-up drain. Less handles.	
6832.000	Lavatory Faucet. 1.5 gpm/5.7L/min pressure compensating aerator. Grid strainer drain. Less handles.	

Handles must be ordered separately.

The above fittings will accept the following Amarilis-Series handles.

Wrist Blade	Lever
372H 372V	342H 342V

Meets the American Disabilities Act Guidelines and **ANSI A117.1** Requirements for the physically challenged.

Other Aerators Available:

Part Suffix	Description
V15	1.5 gpm Pressure Compensating Vandal-Resistant Aerator
L15	1.5 gpm Pressure Compensating Laminar Flow
LV15	1.5 gpm Pressure Compensating Vandal-Resistant Laminar Flow Outlet
V05	0.5 gpm Pressure Compensating Vandal-Resistant Spray

© 2008 AS America Inc.

Item No: 5.5

SLOAN®
Gravity Series

Model
WETS 9000-1.28
Two Piece Floor Mounted Elongated Toilet Tank System

DESCRIPTION

Complete two piece vitreous china, elongated, floor mounted toilet tank system.

Flush Cycle

☐Model WETS-9000.9010-1.28 gpf/4.8 Lpf (Left Handle)
- ST-9000-A 1.28 Bowl
- ST-9010-A 1.28 Left Handle Tank

☐Model WETS-9000.9110-1.28 gpf/4.8 Lpf (Right Handle)
- ST-9000-A 1.28 Bowl
- ST-9110-A 1.28 Right Handle Tank

HET
HIGH-EFFICIENCY TOILET

Left Handle Model Shown

SPECIFICATIONS

Quiet, two piece toilet tank system with vitreous china floor mounted elongated water closet and compact tank for left handle or right handle with the following features:

Two Piece Toilet System

- Contemporary design
- Siphon jet flushing action
- Depending on model selected, available with a right or left handle
- Quiet powerful gravity flush
- Elongated bowl
- 12" rough-in
- 3" valve opening for better flush performance
- Vitreous china
- Integral trap
- Color matched floor caps
- 2 ⅛" fully glazed trapway
- Water pressure range: 25 to 80 PSI
- Tank and bowl must be ordered as two (2) separate items
- Water spot area 7 ⅞" x 6 ¼"
- Easy handle actuation
- Water supply not included
- Toilet seat not included
- Compatible with toilet seat models: Olsonite 10CT, Bemis 1955CT & Church Commercial 295CT
- Toilet tank system is in compliance to the applicable sections of ASME A112.19.2/CSA B45.0/CSA B45.1

FEATURES

Performance

Sloan's toilet tank system incorporates a high performance flapper flush valve to ensure an efficient and optimum flushing performance. 3" valve opening offers better waste removal and powerfully clears the bowl.

Colors and Accessories

Available in the color White with polished chrome left or right trip handle. For additional information refer to our price book.

Functional

The tank valve provides a 1.28 gpf low consumption flush. Durable construction provides non-corrosive dependability. Anti-siphon ballcock allows reliable operation at high or low water pressures. Adjustment screw allows water level adjustment for individual preference.

Economical

High Efficiency Toilet tank system provides additional savings in water usage. Reduces maintenance and operation costs. Designed for commercial use and also ideal for residential.

Warranty

3 year (limited)

Product Specification

Elongated toilet tank system shall be made of vitreous china. Toilet tank system shall be installed at required height of 29" from floor to top of tank fixture.Toilet tank system shall be floor mounted. Toilet tank system shall include floor mount bolts and caps. Toilet tank system shall be a high efficiency 1.28 gpf. Toilet tank system shall be Sloan model WETS-9000.9010-1.28 (left handle) or Sloan model WETS-9000.9110-1.28 (right handle).

U.S. GREEN BUILDING COUNCIL MEMBER

UPC C ®

Listed by I.A.P.M.O.

This space for Architect/Engineer approval

Job Name _____ Date _____

Model Specified _____ Quantity _____

Variations Specified _____

Customer/Wholesaler _____

Contractor _____

Architect _____

The information contained in this document is subject to change without notice.

SLOAN®
Sloan Valve Company
10500 Seymour Avenue
Franklin Park, IL 60131
Phone: 1-800-9-VALVE-9 (982-5839)
or 1-847-671-4300
Fax: 1-800-447-8329
or 1-847-671-4380
www.sloanvalve.com

Copyright © 2010 Sloan Valve Company
Rev. 0b (07/10)

Gravity Series

Model

WETS 9000-1.28

Two Piece Floor Mounted Elongated Toilet Tank System

DESCRIPTION

Complete two piece vitreous china, elongated, floor mounted toilet tank system.

Flush Cycle

☐Model WETS-9000.9010-1.28 gpf/4.8 Lpf (Left Handle)
- ST-9000-A 1.28 Bowl
- ST-9010-A 1.28 Left Handle Tank

☐Model WETS-9000.9110-1.28 gpf/4.8 Lpf (Right Handle)
- ST-9000-A 1.28 Bowl
- ST-9110-A 1.28 Right Handle Tank

DIMENSIONS/ROUGH-IN

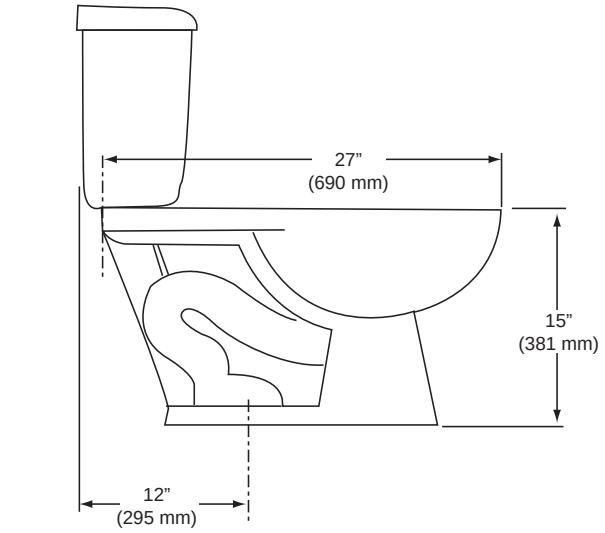

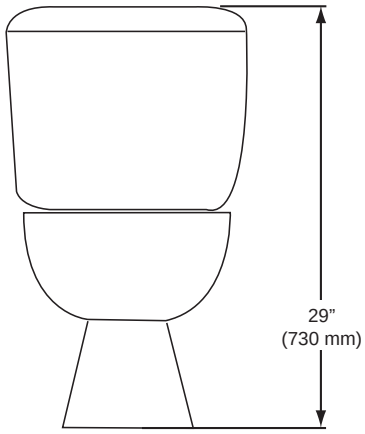

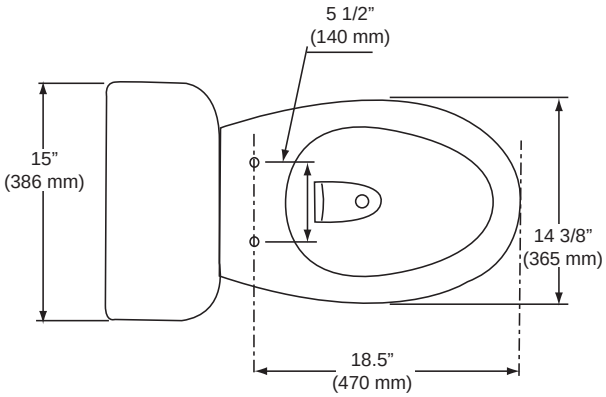

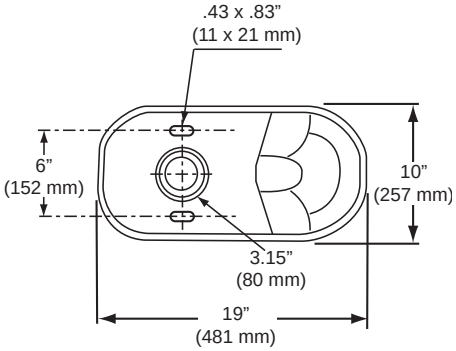

SLOAN VALVE COMPANY • 10500 SEYMOUR AVENUE • FRANKLIN PARK, IL 60131
Phone: 1-800-9-VALVE-9 or 1-847-671-4300 • Fax: 1-800-447-8329 or 1-847-671-4380 • www.sloanvalve.com

Copyright © 2010 Sloan Valve Company

American Standard
Style That Works Better

SHOWER SYSTEMS

FLOWISE® SINGLE FUNCTION SHOWERHEADS

Model #	Description	Finishes	Roughing-In Dimensions
1660.631 **1660.611** 	**MODERN FloWise® WATER SAVING SHOWERHEAD** • Up to 40% water savings • Turbine Spray at Max. 1.5 gpm/5.7L/min. • Angle adjustable **MODERN FloWise® WATER SAVING SHOWERHEAD** • Showerhead only • Max. 1.5 gpm/5.7L/min.	.002 Polished Chrome .075 Stainless Steel (PVD) .295 Satin Nickel (PVD)	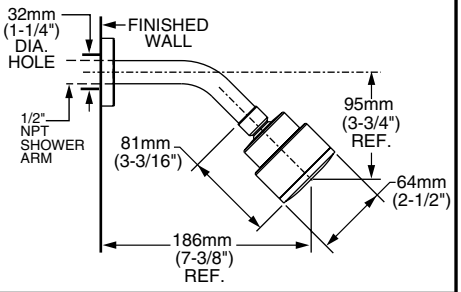
1660.831 **1660.811** 	**SQUARE FloWise® WATER SAVING SHOWERHEAD** • Up to 40% water savings • Turbine Spray at Max. 1.5 gpm/5.7L/min. • Angle adjustable **SQUARE FloWise® WATER SAVING SHOWERHEAD** • Showerhead only • Max. 1.5 gpm/5.7L/min.	.002 Polished Chrome .068 Blackened Bronze (PVD) .295 Satin Nickel (PVD)	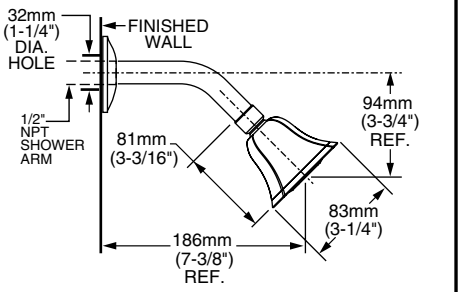
1660.732 **1660.715** 	**TRANSITIONAL FloWise® WATER SAVING SHOWERHEAD** • Up to 40% water savings • Turbine Spray at Max. 1.5gpm/5.7L/min. • Angle adjustable **TRANSITIONAL FloWise® WATER SAVING SHOWERHEAD** • Showerhead only • Max. 1.5 gpm/5.7L/min.	.002 Polished Chrome .099 Polished Brass (PVD) .075 Stainless Steel (PVD) .295 Satin Nickel (PVD)	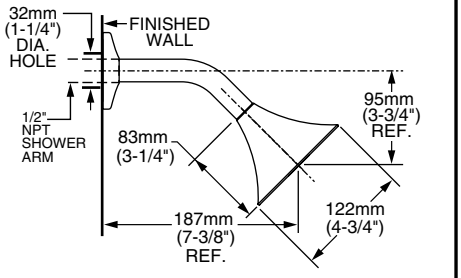
1660.131 **1660.111** 	**TRADITIONAL FloWise® WATER SAVING SHOWERHEAD** • Up to 40% water savings • Turbine Spray at Max. 1.5 gpm/5.7L/min. • Angle adjustable **TRADITIONAL FloWise® WATER SAVING SHOWERHEAD** • Showerhead only • Max. 1.5 gpm/5.7L/min.	.002 Polished Chrome .068 Blackened Bronze (PVD) .295 Satin Nickel (PVD)	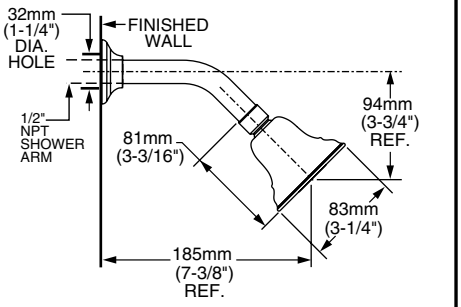
1660.731 **1660.710** 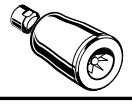	**FloWise® WATER SAVING SHOWERHEAD** • Up to 40% water savings • Turbine Spray at Max. 1.5 gpm/5.7L/min. • Angle adjustable **FloWise® WATER SAVING SHOWERHEAD** • Showerhead only • Max. 1.5 gpm/5.7L/min.	.002 Polished Chrome .068 Blackened Bronze (PVD) .075 Stainless Steel (PVD) .099 Polished Brass (PVD) .295 Satin Nickel (PVD)	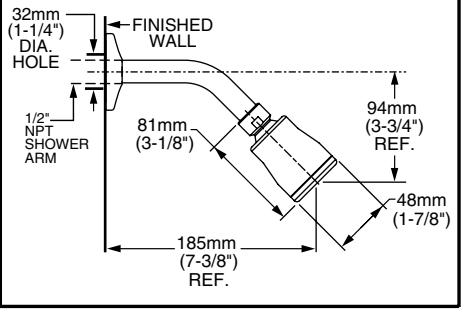

© 2010 AS America Inc.

DELTA CONSULTING & ENGINEERING
OF ST. HELENA

SEPTIC FEASIBILITY REPORT

FOR THE

REDMON RANCH WINERY
USE PERMIT

PROJECT LOCATED AT

867 DOWDELL LANE
ST. HELENA, CA 94574

COUNTY: NAPA
APN: 009-580-009

STANDARD INDUSTRIAL CLASSIFICATION NUMBER (SIC): 2084
INITIAL SUBMITTAL: AUGUST 28, 2015

PREPARED FOR REVIEW BY:

CITY OF ST. HELENA
1480 MAIN STREET
ST. HELENA, CA 94574

DELTA CONSULTING & ENGINEERING
OF ST. HELENA

TABLE OF CONTENTS

I.	Introduction	3
II.	Existing Wastewater Flows and Treatment Systems	3
	A. Wastewater Generation	3
III.	Proposed Wastewater Treatment System	4
	A. Introduction	4
	B. Domestic Wastewater Flow	4
	C. Winery Process Wastewater Flow	5
IV.	Conclusion	12

DELTA CONSULTING & ENGINEERING
OF ST. HELENA

I. INTRODUCTION

Redmon Ranch Winery is applying to the City of St. Helena for a Use Permit for a winery and commercial kitchen. This report has been prepared to evaluate the feasibility of treating and disposing of the increased wastewater flows for both domestic and process wastewater.

Redmon Ranch Winery's marketing plan that contributes to the wastewater flows is made up of the following:

- Production Capacity: 24,000 gallons of wine per year
- Employees: three full time, three part time
- Residential: Eight Residents (maximum)
- Food Preparation: 500 meals prepared per week to be sold off-site

Redmon Ranch Winery currently has the following buildings on the property: barn, second dwelling, main residence, guest bedroom building, storage building, and a garage. The owner proposes to remodel and relocate the following buildings on the property: the barn to a barrel storage building, guest bedroom building to an adjacent dry storage building, storage building to a winery lab and storage, and the garage to a new commercial kitchen and dry storage. Additionally, the owner will be constructing a new covered fermentation structure. No changes will be made to the main residence and second dwelling. See Appendix 1 for the existing and proposed site map.

The existing standard septic system treats the domestic wastewater generated from the main residence, second dwelling, and the guest bedroom building. The proposed development will demolish the existing septic system to Napa County standards and connect both domestic and process wastewater to the City of St. Helena's Wastewater Treatment Facility. The following sections provide a brief description of the existing systems, design flows, and disposal.

II. EXISTING WASTEWATER FLOWS AND TREATMENT SYSTEMS

A. Wastewater Generation

The domestic wastewater (DW) generated at the Redmon Ranch Winery is based on the number of residents. Based on Napa County Department of Environmental Management (NCDEM) Regulations for Design, Construction, and Installation of Alternative Sewage Treatments Systems[1], the existing domestic wastewater flow is able to be estimated at 120 gallons per bedroom per day. The property currently has two residential units with a total of five bedrooms. Given this information, the estimated existing domestic wastewater generated on the property is up to 600 gallons per day and is treated by an existing standard septic system on the property. The flow chart shown in Figure 1 below details the steps for domestic wastewater disposal at Redmon Ranch Winery:

[1] Napa County Regulations for Design, Construction, and Installation of Alternative Sewage Treatment Systems, Appendix 1, Table 4, 2006.

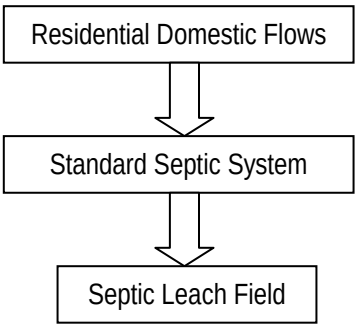

Figure 1: Existing Residential Domestic Wastewater Treatment System Schematic

III. PROPOSED WASTEWATER TREATMENT SYSTEM

A. Introduction

The new winery will have the capacity to produce 24,000 gallons of wine per year with a maximum of three (3) full-time employees and three (3) part-time employees. Additionally, the commercial kitchen will be permitted to prepare 500 meals per week to be sold at an off-site location. No visitation will be allowed at the new winery.

B. Domestic Wastewater Flow

Wastewater Generation

The domestic wastewater generated on the property is dependent on the number of employees at the new winery, the meals prepared at the commercial kitchen, and the number of residents at the two existing residences. In terms of wastewater generation, this gives the maximum number of people that will be contributing to the daily peak wastewater flow rate.

Estimating Wastewater Quantity

To calculate the daily peak DW flow rates generated on the property, the maximum number of people present at the site, as well as the amount of wastewater each person will generate, must be estimated. The winery's marketing plan proposes a total of six (6) employees, eight (8) residents and 500 meals to be prepared from the commercial kitchen on a weekly basis. Napa County estimates the wastewater generated by the employee is fifteen (15) gallons per day per employee, the wastewater generated by the residents is sixty (60) gallons per day per resident and the wastewater generated per meal is five (5) gallons per day. Based on this information, the domestic wastewater flow is 926 gallons per day. This would be the average amount of domestic wastewater entering the City of St. Helena's Wastewater Treatment Facility on a daily basis.

100 Gallon Grease Interceptor Tank – Commercial Kitchen & Dry Storage Building

A commercial kitchen will be installed in the Commercial Kitchen & Dry Storage Building. Prior to discharge to the city sewer system, kitchen wastewater must pass through a grease interceptor tank to reduce fats, oils, and grease. Grease interceptor tanks must be sized based on the maximum meals prepared per hour, gallons of wastewater generated per meal, the required amount of retention time in the tank, and a storage factor. Based on the grease interceptor sizing worksheet found in the Uniform Plumbing Code (also attached in the report as Appendix 2), the

minimum size of the grease interceptor is the following:

Volume = (33 Meals / Hour) x (2 Gallons / Meal) x (1.5 Hours Storage Time) x (1) =

Volume= 99 Gallons Minimum

The required minimum storage volume will be met for this project. The grease interceptor will be installed according to the City of St. Helena regulations. The location of the grease interceptor tank can be seen on sheet UP3.0 of the Use Permit Plans submitted with this report.

C. Winery Process Wastewater Flow

Wastewater Generation

Winery wastewater outflow and strength varies throughout the winemaking year. A typical winemaking year begins with harvest preparation and harvest. These events occur during the months of August, September, and October. The harvest season typically generates both the largest volume and maximum strength of process wastewater.

Estimating Wastewater Quantity

As every individual winery incorporates differing winemaking methods and equipment, the actual annual wastewater produced varies for each winery. The amount of wine produced in one year is the most important part in estimating a specific wastewater generation. Once a winery determines the volume of they will produce, various factors can be applied to estimate the wastewater that will be generated from production. Furthermore, it is very important to estimate the peak volume of wastewater that can be generated in one day. Undersized storage tanks and pumps can lead to the costly failure of wastewater treatment systems, and half the production process.

Two methods are currently used by the local wastewater engineering consultants to determine both the annual and daily peak process wastewater flows generated from a winery. The Napa County Method is used to estimate the peak wastewater flow that could occur in one day during harvest. The Industry Method estimates the annual wastewater generation, then distributes a percentage of that flow to each month based the seasonal behaviors of winemaking. The daily peak flow is then estimated by dividing the volume wastewater generated during the peak month by the number of days in a month. The Industry Method generally produces a more realistic estimate of wastewater flows. Below will be an analysis and comparison of both methods to determine the volume of process wastewater produced. However, the Industry Method will be used to estimate the quantity of wastewater generated at the new winery.

Napa County Method:

Annual Wine Production (gallons)	# of Crush Days
<20,000	30
20,000-50,000	45
>50,000	60

Table 1: Napa County Method - Crush Days

The Napa County Method focuses on determining the maximum daily flow a wastewater system would be required to treat. This method uses two base assumptions: the amount of process wastewater generated annually is only distributed during harvest period, and a multiplication factor of 1.5 is used for process waste generation. The harvest period, shown in Table 1 above, is divided into days that grapes are crushed based on annual production in order to obtain a flow rate in gallons per day (GPD).

Based on the projected wine production of 24,000 gallons, the multiplication factor of 1.5, and forty five (45) crush days that wastewater generation is distributed over, The Napa County Method estimates a process wastewater (PW) peak harvest flow of 800 gallons per day.

Industry Method:

The Industry Method uses a ratio of 4-12 gallons of PW generated per gallon of finished wine produced to determine the annual PW volume produced. The ratio depends on the water conservation techniques utilized within each individual winery. In rare cases, if the winery is water conscious, the ratio can be as low as 4. For a typical winery, the ratio is higher. For the new winery, a value of 8 gallons of PW per gallon of wine is analyzed. The next step in estimating wastewater quantity is to determine the peak daily flow. The annual estimated PW is broken down into monthly percentage flows. This method attempts to consider the winery operations, which vary by month depending on the winemaking season. For example, with this method, the percentages increase for the harvest months and the percentages decrease for the non-harvest months.

Based on the projected annual wine production level of 24,000 gallons and 8 gallons of PW generated per gallon of wine, the Industry Method estimates 228,000 gallons of PW produced annually. Table 2 below shows the percentage breakdown for monthly and daily flows. This table is located in the 'Wastewater Flow Generation' page on the Water Balance Spreadsheet, found in Appendix 3.

DELTA CONSULTING & ENGINEERING
OF ST. HELENA

Month	Day/mo	Estimated % of PW	Monthly PW Flow (gallons)	Average Daily PW Flow (gallons)	Month
Jan	31	6%	13,680	440	Jan
Feb	28	6%	13,680	490	Feb
Mar	31	7%	15,960	510	Mar
Apr	30	7%	15,960	530	Apr
May	31	7%	15,960	510	May
Jun	30	6%	13,680	460	Jun
Jul	31	6%	13,680	440	Jul
Aug	31	12%	27,360	880	Aug
Sep	30	15%	34,200	1,140	Sep
Oct	31	15%	34,200	1,100	Oct
Nov	30	7%	15,960	530	Nov
Dec	31	6%	13,680	440	Dec
	TOTAL	100%	228,000		
			Peak Average Daily Flow:	1,140	gpd
			Peak Hourly Flow:	48	gph
			30 Peak Minute Flow:	24	gallons
				Sep	

Table 2: Monthly Process Wastewater Flows

Based on Table 2 above, the peak process daily wastewater flow is 1,140 gallons per day. Using a peak hour factor of 25% of the daily wastewater flow, the peak process 30-minute wastewater flow is 285 gallons. In estimating the amount of process wastewater generated on the property, the industry method will be used as that produces the most wastewater.

Given the domestic wastewater flow of 926 gallons per day and the process wastewater flow of 1,140 gallons per day, the total wastewater generated on the property after development is 2,066 gallons per day.

The proposed method for disposal of both the process and domestic wastewater is through the City of St. Helena municipal sewer system. The main pollutants of concern affecting the sewer service charges for wastewater the 5-Day Bio-Chemical Oxygen Demand (BOD5) and the Total Suspended Solids (TSS). The typical concentrations of these pollutants in raw winery wastewater are shown below:

BOD5 – 5,000 mg/L
TSS – 500 mg/L

The treatment system described below will reduce pollutants in the raw process wastewater to levels acceptable for the municipal sewer system. The treatment options below assume the peak design flow of 2,066 gallons per day.

Discharge Option One – Direct Discharge to City Sewer System

2,500 Gallon Lift Station Tank

The proposed 2,500 gallon lift station tank would discharge the process and domestic wastewater directly into the city sewer system. All the domestic wastewater will be collected and directly connected to the lift station from the Second Unit, Main residence, Winery Lab & Storage, and the trash enclosure. The domestic wastewater from the Commercial Kitchen & Dry Storage will go through a 100 gallon grease interceptor and connect to the lift station. The process wastewater only comes from the covered fermentation structure and the exterior trench drain and will directly connect to the lift station. The force main from the lift station tank would connect to a proposed gravity main on Dowdell Lane that discharges wastewater to the city sewer system at the existing sewer manhole at Dowdell Lane/La Fata St. There would be no reduction in the wastewater strength with this option. The flow chart shown in Figure 2 below details the steps for discharge option 1:

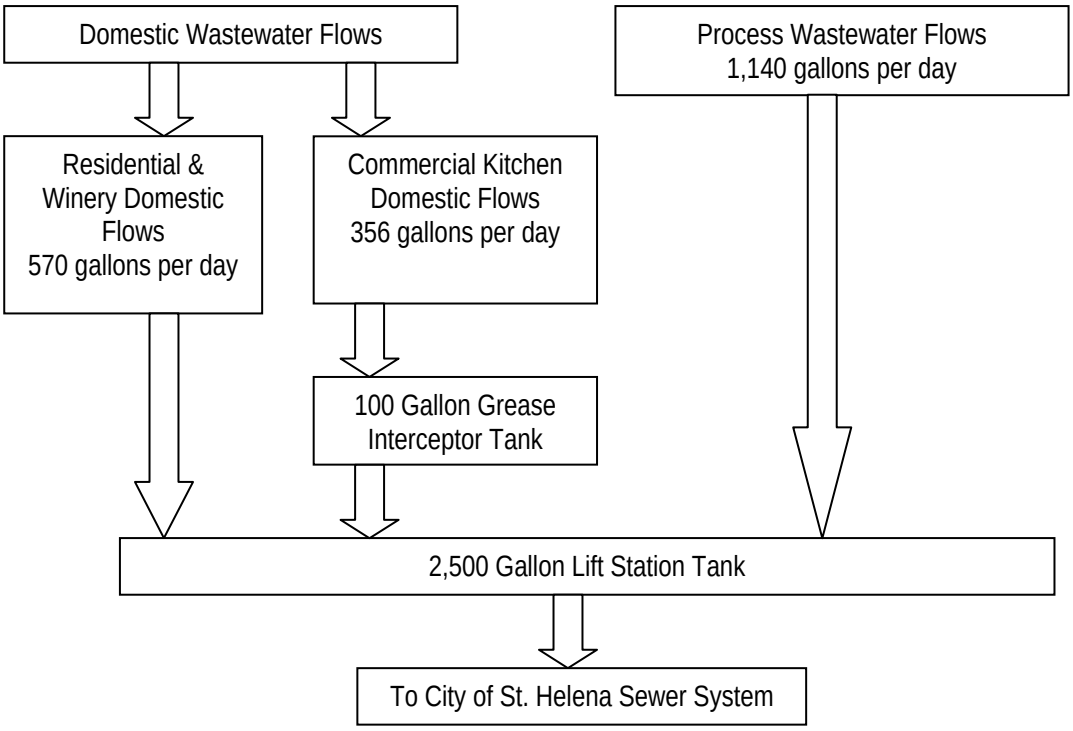

Figure 2: Discharge Option One – Direct Discharge to City of St. Helena Sewer System

Discharge Option 2 – Aeration System

This option proposes treatment of the process wastewater to provide significant BOD5 and TSS reduction, thereby reducing the wastewater strength and demand on the City Wastewater Treatment Plant.

1,500 Gallon Primary Settling Tank System

The process wastewater comes from the covered fermentation structure's interior trench drains and the exterior trench drain on the concrete pad adjacent to the covered fermentation structure. For process wastewater, the primary settling system does not provide a significant reduction in BOD5. Because of the high organic content in the wastewater, dissolved oxygen is rapidly depleted, resulting in anaerobic conditions. This leads to unsatisfactory odors and a disruption of the bacteria population that consumes and reduces the organic content in the wastewater. A primary settling system that provides too many days of storage is inefficient for the treatment of BOD5 in process wastewater. As such, the primary settling tank is sized to provide 1.5 days of storage during peak loading conditions. A 5% reduction of BOD5 is expected through the primary setting system.

The main purpose of the primary settling tank will be the reduction of TSS. In addition to the 1.5 days of storage provided, the tank will be fitted with an effluent filter designed to screen solids larger than 1/32". A reduction of 50% in TSS is expected through this stage of treatment. This assumption is based on standard solids reduction through primary settling tanks.

Nutrient Addition and pH Balance

In order to optimize the treatment process, nutrients and chemicals must be added to the process wastewater. Ideally, chemicals required to improve the treatment process will be added between the primary settling and aeration tanks. For this treatment system, the addition of chemicals will be accomplished by pumping a slurry mix into the pipeline between the primary settling and aeration tank. The addition of chemicals at the winery will be administered by a contracted septic maintenance consultant. This is to ensure satisfactory performance in maintaining pH and nutrients at optimal levels for the biological treatment of wastewater.

3,000 Gallon Combined Aeration & Secondary Settling Tank

The aeration and secondary settling tank will be combined into one tank with a baffle separating the aeration and secondary settling portion of the tank. The aeration is a critical part of the treatment process. It supplies dissolved oxygen to the wastewater and supports the bacteria population that consumes organic matter. The aeration tank must be sized to provide adequate hydraulic retention time for biological activity to take place (8-24 hours). The amount of oxygen supplied must be determined by the BOD5 reduction expected in this stage of treatment.

The proposed tank will provide a hydraulic retention time of approximately 1.5 days at peak loading conditions. The BOD5 influent concentration is expected to be 4,750 mg/L at peak loading conditions. The amount of oxygen supplied will be sufficient to reduce the BOD5 concentration in the wastewater to 400 mg/L. Because most aerators give their oxygen supply in pounds per day (lbs O2/day), the desired reduction in BOD5 must be converted from a concentration (mg/L) to lbs O2/day in order to select the appropriate aerator configuration. The conversion is shown below:

O2 Required (lbs/day) = (Daily Flow MGD) x (BOD5 Concentration mg/L) x (Conversion Constant 8.34 lbs/gal)

O2 Required (lbs/day) = (0.002066 MGD) x (4,750 – 400 mg/L) x (8.34 lbs/gal)

O2 Required (lbs/day) =75 lb/day

From the calculation shown above, the bacteria will require 75 lbs O2/day in order to consume the organic matter in the wastewater. The aerator configuration must be carefully selected to ensure that treatment goals are reached. For this project, the aerators to be used are from the VBT series, manufactured by The Advanced Aeration Group, LLC. One VBT600 aerator is required to provide 75 lbs O2/day needed to support the treatment system. According to the manufacturer's specifications, the VBT600 produces 608 lbs O2/day. However, this is not the amount of oxygen transferred to the wastewater. Orenco Systems, Inc. has produced documentation that details design guidelines for the amount of oxygen transferred to wastewater by the VBT aerator (see Appendix 4). According to Orenco design guidelines, the VBT600 will transfer 96 lbs O2/day. Although this is greater than what is required, no additional reduction in BOD5 concentration will be taken.

It is assumed that there will be no reduction of TSS in the aeration tank.

A summary of the wastewater strength characteristics after the aeration is shown below:

BOD5 = 400 mg/L
TSS = 250 mg/L

The wastewater flows via gravity from the aeration portion of the tank into the secondary settling portion of the tank through a baffle. Secondary settling is an important part of the treatment system that involves aeration. The aerator in the aeration tank will keep solids suspended in solution of the air bubbles that are forced through the wastewater. Typically, secondary settling basins are sized to provide 1-2 days of hydraulic retention time. The 1,500 gallon tank for secondary settling will provide approximately 1.5 days of hydraulic retention time. The secondary settling tank is expected to reduce the TSS by 20% through gravitational settling and filter screening. The settling tank is also expected to provide a 10% reduction in BOD5, as biological processes will continue to take place in the tank. A summary of the estimated wastewater strength characteristics after this stage of treatment are shown below:

BOD5 = 360 mg/L
TSS = 200 mg/L

Wastewater from the combined aeration and secondary settling tank will flow via gravity to the lift station tank.

2,500 Gallon Lift Station Tank – Domestic and Process Wastewater

All the domestic wastewater will be collected and directly connected to the lift station from the Second Unit, Main residence, Winery Lab & Storage, and the trash enclosure. The domestic wastewater from the Commercial Kitchen & Dry Storage will go through a 100 gallon grease interceptor and connect to the lift station.

In addition, the lift station will also collect the process wastewater from the secondary settling tank to discharge the treated wastewater to the city sewer system. No further reduction in wastewater strength will occur in the lift station tank. A duplex pump system would be installed in the tank. The force main from the lift station tank would connect to the existing gravity main on Dowdell Lane that discharges the wastewater to the city sewer system. The flow chart shown in Figure 3 below details the steps for discharge option 2:

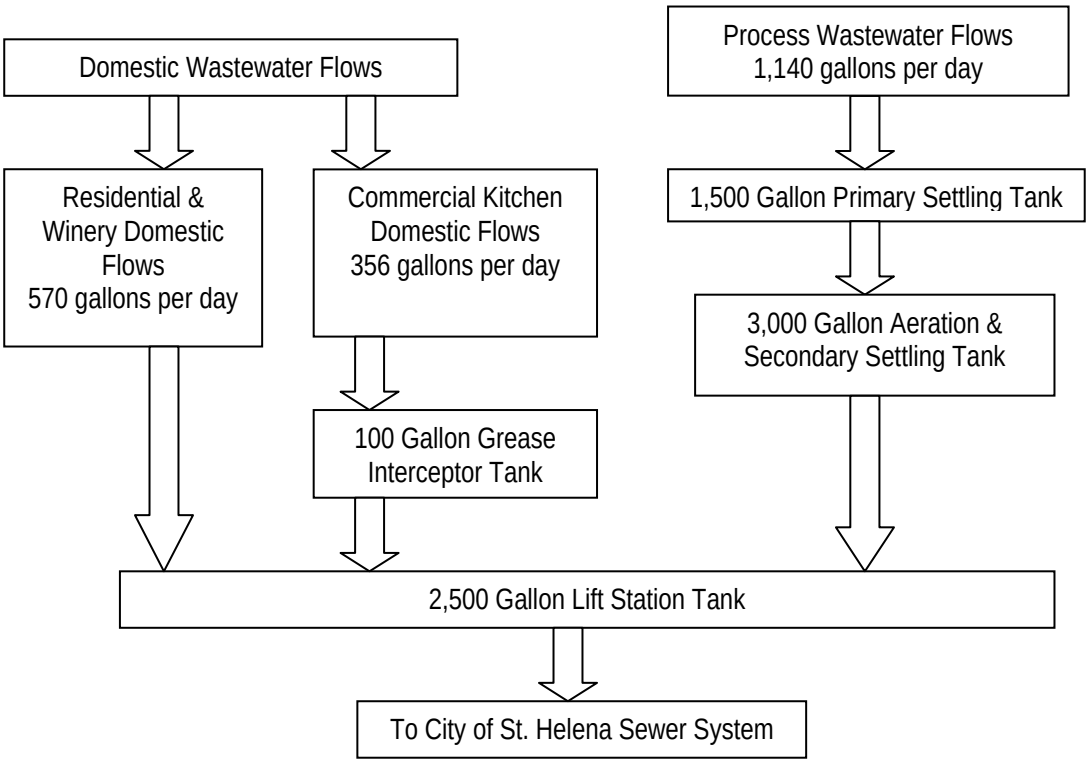

Figure 3: Discharge Option Two– Aeration System before entering City of St. Helena Sewer System

IV. CONCLUSION

Redmon Ranch Winery is requesting a use permit for an annual wine production of 24,000 gallons, a total of three full-time and three part-time employees, eight residents, and 500 meals to be prepared in the commercial kitchen and sold off-site on a weekly basis. Based on the analysis performed in this report, Redmon Ranch Winery is expected to generate a combined domestic and process waste of 2,066 gallons per day.

The existing septic system that handles all the domestic wastewater will be demolished per Napa County Standards and a new sewer connection to the City of St. Helena's Wastewater Treatment System will be established for both the domestic and process wastewater.

The addition of a winery and commercial kitchen for Redmon Ranch Winery is suitable for the parcel with respect to wastewater treatment and disposal. With the proposed site development and marketing plan, the amount of wastewater generated is not expected to adversely affect the City of St. Helena's Wastewater Treatment System.

DELTA CONSULTING & ENGINEERING
OF ST. HELENA

IX. APPENDIX

1 Existing & Proposed Site Map
2 Grease Trap Sizing Worksheet
3 Winery Wastewater Generation Calculations
4 Treatment Equipment

DELTA CONSULTING & ENGINEERING
OF ST. HELENA

APPENDIX 1:

EXISTING & PROPOSED SITE MAP

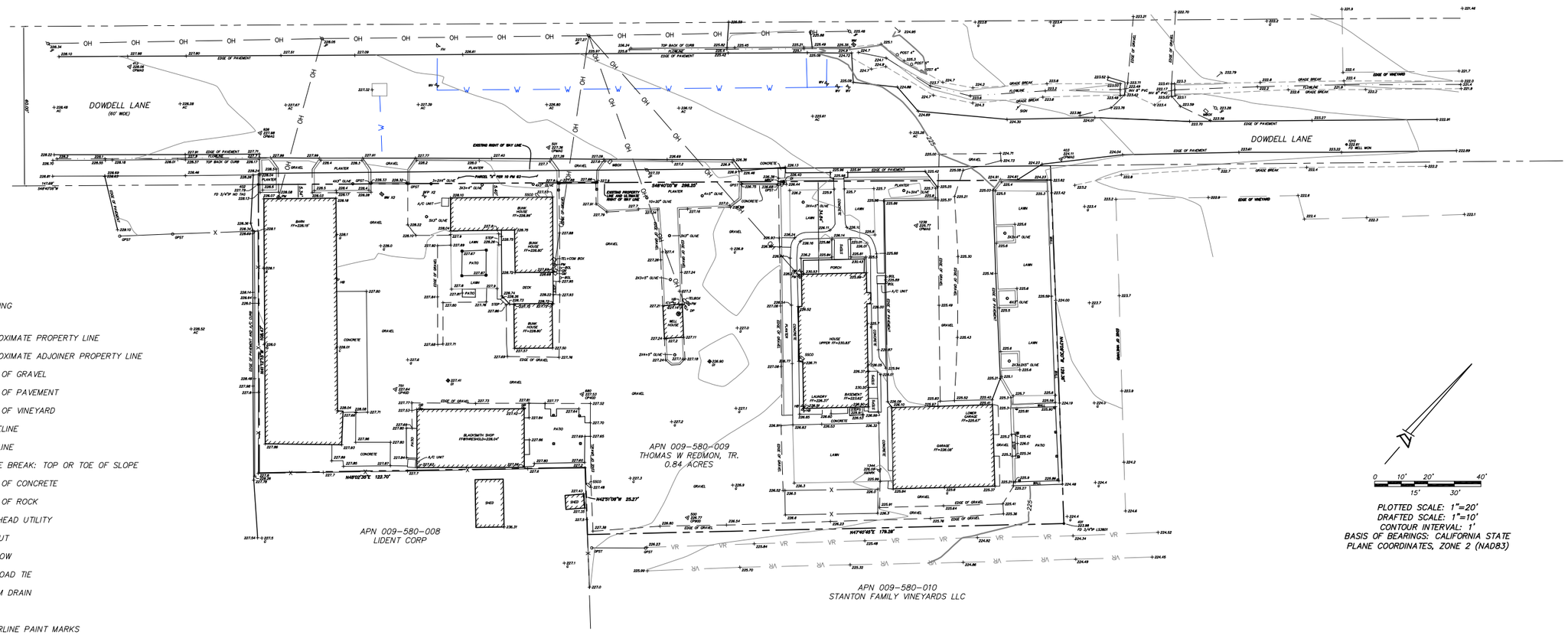

LEGEND

- BUILDING
- APPROXIMATE PROPERTY LINE
- APPROXIMATE ADJOINER PROPERTY LINE
- EDGE OF GRAVEL
- EDGE OF PAVEMENT
- EDGE OF VINEYARD
- FENCELINE
- FLOWLINE
- GRADE BREAK: TOP OR TOE OF SLOPE
- EDGE OF CONCRETE
- EDGE OF ROCK
- OVERHEAD UTILITY
- SAWCUT
- VINEROW
- RAILROAD TIE
- STORM DRAIN
- WALL
- WATERLINE PAINT MARKS
- ANCHOR AND UTILITY POLE
- BOLLARD
- DROP INLET (DI)
- FIRE HYDRANT
- FOUND MONUMENT AS NOTED
- GATE POST
- GAS METER
- HOSE BIB
- IRRIGATION CONTROL VALVE
- MAILBOX
- POWER METER
- SEPTIC CLEANOUT
- SIGN
- SURVEY CONTROL POINT
- WELL
- WATER METER
- WATER VALVE
- TREE: DIAMETER AND SPECIES AS NOTED
  - LO = LIVE OAK
  - BO = BLACK OAK
  - WO = WHITE OAK
  - DF = DOUGLAS FIR

0 10' 20' 40'
15' 30'

PLOTTED SCALE: 1"=20'
DRAFTED SCALE: 1"=10'
CONTOUR INTERVAL: 1'
BASIS OF BEARINGS: CALIFORNIA STATE PLANE COORDINATES, ZONE 2 (NAD83)

DRAWING HAS BEEN SCALED DOWN FROM ORIGINAL SIZE. SCALE NOT VALID.

NOTES

THIS MAP DOES NOT REPRESENT A PROPERTY LINE SURVEY. PROPERTY LINES SHOWN HEREON ARE BASED ON RECORD DATA.

THIS PARCEL IS NOT LOCATED IN A FEMA FLOOD HAZARD ZONE.

A 5'± STRIP ALONG DOWDELL LANE WAS OFFERED TO THE CITY IN 1979 PER 10 PM 63, BUT NOT ACCEPTED BY THE CITY. THE EXISTING RIGHT OF WAY LINE AND THE ULTIMATE 60' RIGHT OF WAY LINE ARE SHOWN ON THIS MAP.

THIS MAP IS BASED ON A FIELD SURVEY OF 7/2, 7/14 & 7/15/2014.

THIS MAP WAS PREPARED AT THE REQUEST OF LISA MANGELSON AT REDMON WINES.

THE VERTICAL DATUM OF THIS MAP IS NAVD88.

SITE BENCHMARK DESCRIPTION:
SET SPIKE #500 AT SOUTHEASTERLY EDGE OF GRAVEL PARKING LOT, 10.7' NORTHWEST OF EDGE OF VINEYARD AND 19' NORTHERLY OF 6"X6" GATE POST.
ELEVATION = 125.59'

TOPOGRAPHIC MAP

OF A PORTION OF THE LANDS OF

THOMAS W. REDMON, TR.

ASSESSOR'S PARCEL NO. 009-580-009

867 DOWDELL LANE
ST HELENA, CALIFORNIA

PREPARED BY: TERRA FIRMA SURVEYS, INC.
P.O. BOX 533
ST. HELENA CA 94574
PHONE: (707) 963-7565

DATE: July 25, 2014

7/25/2014
1123_1x.dwg
SHEET 1 OF 1

Item No: 5.5

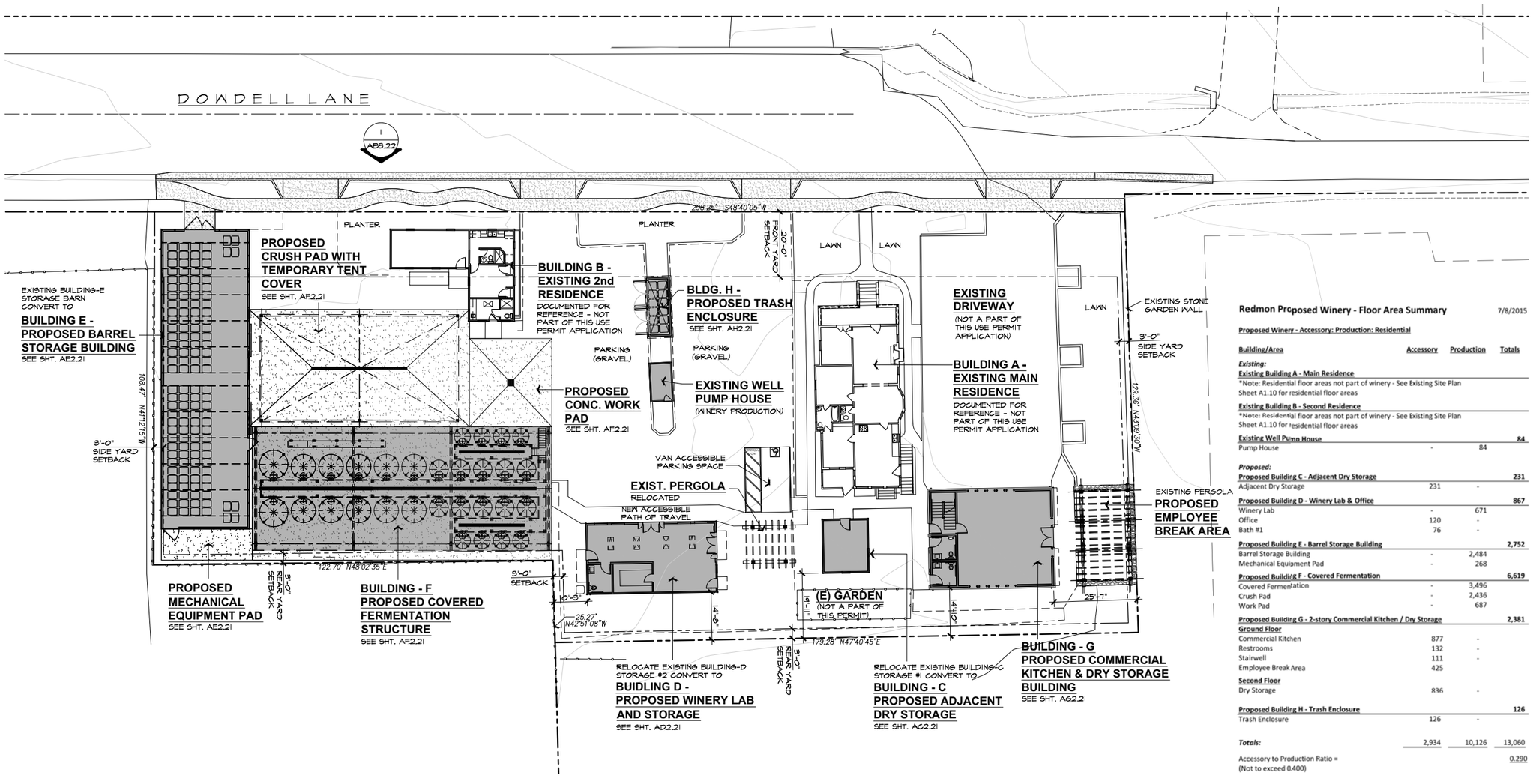

Redmon Proposed Winery - Floor Area Summary 7/8/2015

Proposed Winery - Accessory: Production: Residential

Building/Area	Accessory	Production	Totals
Existing:			
Existing Building A - Main Residence			
*Note: Residential floor areas not part of winery - See Existing Site Plan Sheet A1.10 for residential floor areas			
Existing Building B - Second Residence			
*Note: Residential floor areas not part of winery - See Existing Site Plan Sheet A1.10 for residential floor areas			
Existing Well Pump House			**84**
Pump House	-	84	
Proposed:			
Proposed Building C - Adjacent Dry Storage			**231**
Adjacent Dry Storage	231	-	
Proposed Building D - Winery Lab & Office			**867**
Winery Lab	-	671	
Office	120	-	
Bath #1	76	-	
Proposed Building E - Barrel Storage Building			**2,752**
Barrel Storage Building	-	2,484	
Mechanical Equipment Pad	-	268	
Proposed Building F - Covered Fermentation			**6,619**
Covered Fermentation	-	3,496	
Crush Pad	-	2,436	
Work Pad	-	687	
Proposed Building G - 2-story Commercial Kitchen / Dry Storage			**2,381**
Ground Floor			
Commercial Kitchen	877	-	
Restrooms	132	-	
Stairwell	111	-	
Employee Break Area	425		
Second Floor			
Dry Storage	836	-	
Proposed Building H - Trash Enclosure			**126**
Trash Enclosure	126	-	
Totals:	2,934	10,126	13,060
Accessory to Production Ratio = (Not to exceed 0.400)			0.290

DRAWING HAS BEEN SCALED DOWN FROM ORIGINAL SIZE. SCALE NOT VALID.

0 8 16 32 48 FEET

N TRUE NORTH

A PROPOSED SITE PLAN

SCALE: 1/16" = 1'-0"

PAUL KELLEY ARCHITECT
1436 Second Street, No. 162, Napa, CA 94559
phone 707.257.1148 fax 707.266.1027
www.paulkelleyarchitecture.com

These drawings are the property of Paul Kelley Architect and have been prepared specifically for this project. These drawings are not to be used for any other project, by any other entity or in another location. Copyright 2015 Paul Kelley Architect, Inc.

Consultant:

A Proposed Winery for Redmon Ranch Winery

867 Dowdell Ln., St. Helena, CA 94574
APN: 009-580-009

Seal:

REVISIONS

Date: July 10, 2015

Project No:

Sheet Title: PROPOSED SITE PLAN

Sheet #: A1.11

USE PERMIT SUBMITTAL

DELTA CONSULTING & ENGINEERING
OF ST. HELENA

APPENDIX 2:

GREASE INTERCEPTOR SIZING WORKSHEET

Grease Interceptor Sizing Worksheet

The Uniform Plumbing Code Formula

Company	Delta Engineering	**Calculated By**	Kevin Zhang	**Date**	08-28-15
Project	Redmon Ranch Winery	**Location**	867 Dowdell Lane		

Follow these six simple steps to determine grease interceptor size.

	No of Meals Per Peak Hours		Waste Flow Rate		Retention Time		Storage Factor		Calculated Interceptor Size	Grease Interceptor
Enter Calculations Here >	33	X	2	X	1.5	X	1	=	99	100
	Step 1		Step 2		Step 3		Step 4		Step 5	Step 6

1

Number of Meals Per Peak Hour (Recommended Formula):

Seating Capacity		Meal Factor		Meals per Peak Hour
	X		=	

Establishment Type:	**Meal Factor**
Fast Food (45 min)	1.33
Restaurant (60 min)	1.00
Leisure Dining (90 min)	0.67
Dinner Club (120 min)	0.50

Notes:
Prepare up to 500 meals per week. Assume the meals are prepared 5 days out of the week with a 3-hour daily operation.

2

Waste Flow Rate:

Condition	**Flow Rate**
With a Dishwashing Machine	6 Gallons
Without a Dishwashing Machine	5 Gallons
Single Service Kitchen	2 Gallons
Food Waste Disposer Only	1 Gallon

Notes:
Kitchen will have dishwashing machine

3

Retention Time

Commercial Kitchen Waste	
Dishwasher	2.5 Hours
Single Service Kitchen	
Single Serving	1.5 Hours

Notes:
Commercial Kitchen Waste

4

Storage Factor

Kitchen Type	**Storage Factor**
Fully Equipped Commercial	
Hours of Operation	
8 Hours	1.00
12 Hours	1.50
16 Hours	2.00
24 Hours	3.00
Single Service Kitchen	1.50

Notes:

5

Calculate Liquid Capacity

Multiply the values obtained from step 1, 2, 3 and 4. The result is the approximate grease interceptor size for this application

Notes:

6

Select Grease Interceptor

Using the approximate required liquid capacity from step 5, select an appropriate size as recommended by the manufacturer.

Notes:

DELTA CONSULTING & ENGINEERING
OF ST. HELENA

APPENDIX 3:

WINERY WASTEWATER GENERATION CALCULATIONS

Project: Redmon Ranch Winery
Wastewater Balance
Issue Date: 08-24-2015

DELTA CONSULTING & ENGINEERING
OF ST. HELENA

Wastewater Flow Generation

Overall System Operation

Process Wastewater

Winery Production (WP) =	10,000	cases/year
	24,000	gallons (2.4 gallons/case)

Harvest Period: Estimated Peak Process Flows*

Number of Crush Days=	45	
Process Wastewater (Harvest Period) =	800	gpd
Estimated theoretical total PEAK PW generated during Harvest period=	36,000	gallons PW generated during harvest

*Napa County Enviromental Management Method

Non-Harvest (Remainder of Wine Making Year outside of Harvest Period)

Estimated Gallons of Process Water Generated per Gallon of Wine Produced=	8	gallons ww/gallon of wine produced
Gallons of Process Waste Generated Per Year=	192,000	gallons/year
MG of Prcoess Watse Generated Per Year=	0.192	MG/year
Remaining Days of Year Outside Crush Period=	320	days
Estimated Process Daily (non-crush) Flows=	600	gpd

Process Waste Production Summary

Crush Period Flows=	36,000	Gallons/year
Non-Harvest Flows=	192,000	Gallons/year
Total Estimated PW Flows	228,000	Gallons per year
Annual Basis, Average Daily PW Flows=	625	gpd

Process Flow Design for Peak Flow

Month	Day/mo	Estimated % of PW	Monthly PW Flow (gallons)	Average Daily PW Flow (gallons)	Month
Jan	31	6%	13,680	440	Jan
Feb	28	6%	13,680	490	Feb
Mar	31	7%	15,960	510	Mar
Apr	30	7%	15,960	530	Apr
May	31	7%	15,960	510	May
Jun	30	6%	13,680	460	Jun
Jul	31	6%	13,680	440	Jul
Aug	31	12%	27,360	880	Aug
Sep	30	15%	34,200	1,140	Sep
Oct	31	15%	34,200	1,100	Oct
Nov	30	7%	15,960	530	Nov
Dec	31	6%	13,680	440	Dec
	TOTAL	100%	228,000		

Peak Average Daily Flow:	1,140	gpd
Peak Hourly Flow:	48	gph
30 Peak Minute Flow:	24	gallons
	Sep	

1104 Adams Street, Suite 203
St. Helena, California 94574
707-963-8456 + fax 963-8528

Project: Redmon Ranch Winery
Wastewater Balance
Issue Date: 08-24-2015

DELTA CONSULTING & ENGINEERING
OF ST. HELENA

Domestic Wastewater

Use Type	Maximum Quantity (persons)	Waste Flow (GPP)*	Days Contributed	Gallons per Day	Annual DW Produced (gallons)
Residence	8	60	365	480	175,200
staff/day	6	15	250	90	22,500
Meals/week	500	5	52	356	130,000
	Total Estimated DW Flows =			926	327,700
				Average Daily DW Flows=	897.81 gpd

**GPP = gallons per person; Values From Napa County Department of Environmental Management*

Wastewater Summary

Use Type	Gallons Per Day
Process Waste	1,140
Domestic Waste	926
Total Estimated Wastewater Flows =	2,066 gpd

1104 Adams Street, Suite 203
St. Helena, California 94574
707-963-8456 + fax 963-8528

DELTA CONSULTING & ENGINEERING
OF ST. HELENA

APPENDIX 4:

TREATMENT EQUIPMENT

Item No: 5.5

Advanced Aeration INC.

Supercharging the Wet Combustion of Organic Waste

* Advanced Aeration, Inc.
102 Midway Industrial Park
Angleton TX 77515

Phone: 281-595-3456
Fax: 281-595-3458

Products

VBT™ 600 Series

Vacuum Bubble® Technology Aerator

The Vacuum Bubble® Technology Aerator Model 600 is sized for large Dairy and Hog farming lagoons, large municipal sewage processing plants and large industrial applications. This unit has a floatation platform available as an option.

VBT™ 600 Specifications

Cubic Feet/Minute(Air)	24
Cubic Feet/Day (Air)	35,000
Lb. O_2/Day	608
Lb. O_2/Hp/Hour	12.6
Approximate Flow(Gal/Day) @ 300 PPM BOD5	180,000

Motor	WEG 2Hp or 3Hp
Voltage 3 Phase Full Load Amps	230/460 7.5/3.8

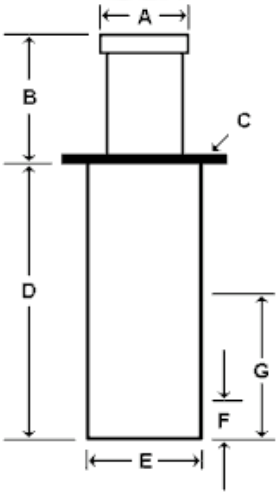

A: Motor Diameter	7.00"
B: Motor Height	11.00"
C: Motor Mount (Square)	14.00"
D: Air Tube Length	23.00"
E: Air Tube Diameter	12.00"
F: Min Water Line	6.00"
G: Max Water Line	14.00"

VBT™ 600 Installation PDF

Markets

Confined Animal Feed Operations (CAFO)

- Waste Lagoon Treatment
- Deep Pit Barn Treatment
- Flush Water Treatment

Read More

Municipal Wastewater Treatment

- Aeration Lagoons
- Solid Waste Separation

Read More

On-Site Wastewater Treatment

- Pre-Treatment
- Aerobic Combustion

Read More

Science

Advanced Aeration Inc.'s Vacuum Bubble® Aerators are built upon sound scientific principles and engineering practices. The bubbles are created under a partial vacuum and consequently, as they enter the water, the higher water pressure surrounding them causes them to collapse further. There are no other, documented aerators with bubbles as small as 0.25mm in diameter

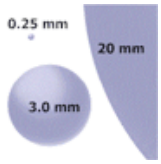

Vacuum Bubble® Technology and Aerobic Bacteria are great for:

- Conventional Waste Treatment
- Aerobic Efficiency
- Nitrification

Read More

Item No: 5.5

Redmon Ranch Winery & Commercial Kitchen

City File #PL15-051

INITIAL STUDY/ MITIGATED NEGATIVE DECLARATION

***Lead Agency*:**
City of St. Helena

August 2016

Item No: 5.5

City of St. Helena
Planning Department
1480 Main Street, St. Helena, CA 94574
(707) 967-2792

INITIAL STUDY OF ENVIRONMENTAL SIGNIFICANCE

PROJECT NAME: Redmon Ranch Winery

CITY FILE NUMBER: PL15-051

SITE ADDRESS: 867 Dowdell Lane

APN: 009-580-009

GENERAL PLAN: Industrial

ZONING: Industrial

APPLICANT: Tom Redmon
1620 Sylvaner
St. Helena, CA 94574
(707) 326 2838

PROJECT DESCRIPTION

Overview. The proposed project includes the construction of two new structures, the conversion of existing buildings, including the conversion of an historic barn, as well as on and off-site infrastructure improvements to accommodate a 24,000 gallon per year production winery at the Redmon Ranch, located on the south side of Dowdell Lane east of Main Street (State Route 29) at 867 Dowdell Lane. The site contains approximately 0.84 acres of land and is located in the (I) Industrial zoning district. Proposed improvements would include renovating the on-site barn and converting it to a production winery in a manner consistent with the U.S. Secretary of Interior standards for the rehabilitation of a historic structure. No tastings or tours are proposed as part of project operations. A commercial kitchen is also proposed on the site and would be leased by a licensed catering company catering company which would be separate from the proposed winery operation. Two existing non-conforming dwellings on the site would remain.

Other proposed improvements would include street improvements along the south side of Dowdell Lane, a new paved parking lot on the east side of the project site, on-site water quality features and utility extensions from Dowdell Lane (water and wastewater) to serve proposed uses.

Approval of a Demolition Permit and Design Review is required to construct the proposed project and approval of a Use Permit by the City of St. Helena is required to operate the proposed winery. The proposed commercial kitchen space is a permitted use.

Proposed buildings and uses. The applicant is proposing to convert an existing 2,915 square foot barn built in the 1890 to 1900 era to a barrel storage warehouse associated with the proposed winery. Other winery improvements would include a new 6,619 square foot, single story fermentation structure to be located on the south side of the site. A 2,436 square foot crush pad, fermentation and outdoor work area would be constructed just to the north of the fermentation structure. During wine processing, a temporary tent structure would be erected above the crush pad. Due to the historic character of the barn, the historic architect's review finds that the otherwise standard requirement for a covered crush pad area may be waived in favor of a temporary canvas cover during harvest and automatic diversion valves for directing water away from critical drainage paths.

Separate from the winery, the existing garage is would be demolished in order to make way for the proposed 2,381 square foot commercial kitchen on the southeast corner of the site. The commercial kitchen would be for the preparation

of catered foods to be sold off-site or served to the public off-site. There will be no customers for consuming food on the project site.

An existing main dwelling and a secondary dwelling on the site generally fronting on Dowdell Lane, would remain on the site and may be occupied by the owners, by employees of the winery or commercial kitchen workers or any other residential dweller.

Two other non-historic storage sheds would be relocated on the site and used for dry storage. A number of existing accessory structures on the site would be repurposed to support future winery and/or commercial kitchen uses. The total amount of building area included in the project would be 15,916 square feet.

Parking and Access. Seven parking spaces would be provided on the site, including two handicapped-accessible spaces. Parking lots would be constructed according to City standards and could be include a mix of surfaces, including gravel, asphalt or concrete. Four driveways would be constructed along Dowdell Lane to allow for employees and service trucks to support proposed uses.

A public sidewalk would be constructed along the south side of Dowell Lane, consistent with City design standards.

The City of St. Helena will require the installation of on-site bicycle racks.

Site operations*.* The proposed Redmon Winery would be limited to wine production, bottling, a laboratory space, office, employee lounge and storage. No public tastings, tours or similar events would be allowed. During harvest, the winery would generally operate from 6 am to 6 pm. Hours would be reduced during the non-harvest period. It is anticipated that the winery would have two full-time and two part-time employees plus administrative staff.

The on-site commercial kitchen would be used by a licensed catering company and would be a separate entity not associated with the proposed winery. Hours of operation of the kitchen would be from 6 a.m. to 6 p.m most months of the year.

Existing on-site dwellings could be occupied by live-work units, similar to any other residential use.

Building design features. The existing historic barn on the site would be restored pursuant to Secretary of Interior Standards for the rehabilitation of a historic structure and reused as a barrel storage building. The barn would be refinished with a combination of horizontal lap and board and batten siding, a rusticated corrugated metal roof and would be approximately 26 feet in height. Although interior seismic retrofitting would be undertaken to meet California Building Code standards, these upgrades would not be visible outside of the building. The commercial kitchen would be finished with board and batten siding with a stone veneer base, a composition shingle roof and would be approximately 21 feet in height. The fermentation structure would be open on all sides and supported by a steel frame with steel columns. No significant design changes are proposed to the two existing dwellings on the site, although interior improvements may be made to allow a live-work occupancy.

Landscaping. The applicant proposes to maintain the existing landscape plantings on the site and to maintain a number of ornamental trees on the site, including a number of olive trees. All existing trees would remain. Existing planter areas along the south side of Dowdell Lane would be retained as would a number of turf areas on the site. Large un-built portions of the site would be graveled. Future on-site plantings would be drip-irrigated with remote automatic controllers to minimize water use and evaporation. Planting beds would also be mulched for the same purpose. The project would be conditioned on meeting the State of California Model Water Efficient Landscape Ordinance.

Signs and lighting. One or more small business identification signs would be installed along the Dowdell Lane street frontage. Similarly, building and parking lot lighting would be installed for safety. The number, type, location and design of future signs and lighting fixtures will be subject to City requirements and the Use Permit and Design Review process. Approval; of a Sign Permit by the City is also required.

Utility services. Potable water service to support on-site residential, commercial kitchen and non-winery uses would be provided by the City of St. Helena. Similarly, wastewater service would to be extended to the project site by the City of St. Helena. Water to support wine production and associated uses would be provided by a private on-site well. Wastewater would be piped to the City's wastewater treatment plant southeast of the site. Wastewater will not be permitted to contain wine production byproducts and a sewer sampling manhole will be installed at or near the unit cleanout per City Standards. The project is anticipated to generate approximately 2,066 gallons of wastewater per day and the applicant will be required to obtain a Wastewater Discharge Permit from the Department of Public Works as specified in St Helena Municipal Code Section 13.24.50.

The project applicant will be required by the City to ensure that stormwater runoff is collected and transported off of the site in a manner consistent with City of St. Helena engineering standards and requirements. The project applicant will also be required to comply with City of St. Helena surface water quality requirements during building demolition, grading and construction through implementation of an erosion control plan. Long-term water quality features would also be installed as required by the City of St. Helena.

Requested Land Use Entitlements. The applicant has requested approval of a Demolition Permit, Use Permit, and Design Review by the City of St. Helena Planning Commission. These applications will be considered at a public hearing by the Commission.

The project site is also required to be annexed to the St. Helena Municipal Sewer District No. 1.

ENVIRONMENTAL SETTING

The project site contains 0.84 acres of land located on the south side of Dowdell Lane in the southern portion of St. Helena, east of the intersection of Main Street (State Route 29) and Dowdell Lane. The street address for the site is 867 Dowdell Lane and the Assessor's Parcel Number is 009-580-009.

Exhibit 1 depicts the location of the project site in context with nearby features, including nearby roadways.

The site contains several older structures, including a main and secondary dwelling unit, a historic barn structure containing approximately 2,752 square feet, a garage and other smaller out buildings. The site is known as the "Redmon Ranch."

Surrounding properties have been developed for a variety of uses, including commercial and light industrial uses to the north and west (including an automotive repair shop and Crocker & Starr winery); agriculture land planted to vineyards to the east; and a combination of vineyards and light industrial uses to the south.

GENERAL PLAN AND ZONING

The City of St. Helena General Plan provides the vision for the community's natural and built environment through a series of goals and policies. To ensure that this desired vision is realized, the General Plan has been designed to be internally consistent and cross-referenced with other documents, including the City's Zoning Ordinance which guides, controls and regulates future growth and development in a sound and orderly manner.

The project site is designated for Industrial uses in the St. Helena General Plan and is zoned as "(I): Industrial."

REQUIRED DISCRETIONARY ACTIONS

Approval of the proposed project will require the following discretionary actions:

Demolition Permit, Use Permit and Design Review by the St Helena Planning Commission.

OTHER PUBLIC AGENCY REVIEW

In addition to the required City entitlements identified above, there are no other agencies that have discretionary authority to undertake or approve all or some portion of the proposed project (and which are considered Responsible Agencies under CEQA).

An encroachment permit would be required for work with the Dowdell Lane right-of-way from the St. Helena Public Works Department. The City has requested that the project site be annexed into the St. Helena Municipal Sewer District No. 1. This action would be accomplished by the City and would not require action by the Napa County Local Agency Formation Commission.

The Napa County Planning, Building and Environmental Services Department would be required to approve the commercial kitchen.

DOCUMENTS INCORPORATED BY REFERENCE

CEQA Guidelines Section 15150 recognizes the desirability of reducing the volume of documentation necessary for environmental review and authorizes incorporation by reference any portion of relevant documents that provide general background to the environmental document. As such, this Initial Study incorporates the following documents, which were reviewed as part of the analysis of certain topical sections provided herein:

- City of St. Helena, General Plan Policy Document (1993 and amendments through 2015).
- City of St. Helena, Zoning Ordinance (1994 and amendments through 2016).

Additional documents not reflected in this section are identified and analyzed within the Initial Study. These documents are available for review at the City of St. Helena Planning Department, 1480 Main Street, St. Helena, CA 94574 (707) 967-2792.

PURPOSE OF INITIAL STUDY

The fundamental premise on which CEQA is based is that environmental protection can be achieved through informing decision-makers and the public about a project's potential environmental effects and identifying ways to reduce them. As a public disclosure document, an Initial Study must identify all effects on the environment resulting from a project and indicate the manner in which these effects can be mitigated or avoided to a less-than-significant level. Where it is uncertain that a significant effect on the environment may occur, or where a significant effect is found to exist but cannot be mitigated to a less-than-significant level, an Environmental Impact Report (EIR) must be prepared.

ENVIRONMENTAL PROCEDURES AND CHECKLIST

This Initial Study presents a preliminary evaluation of the potential environmental impacts resulting from the project. The Initial Study was prepared in accordance with the California Environmental Quality Act (Public Resources Code Section 21000-21178.1) and the Guidelines for Implementation of the California Environmental Quality Act (Chapter 3, Title 14, California Code of Regulations (*CEQA Guidelines*)). This Initial Study considers all aspects of the proposed project, as required by Section 15063(a) (1) of the CEQA Guidelines[1].

The Environmental Checklist provided below, as contained in Appendix G of the CEQA Guidelines, was utilized to focus this Initial Study on the environmental factors that may be impacted or further impacted by implementation of the proposed project. Following each of the topical areas presented in the Environmental Checklist, a brief discussion is presented regarding the topical environment setting, the relevance of the proposed project to the topical environment setting, any and all potential impacts within the topical area and, as appropriate and mitigation measures necessary to reduce potentially significant impacts to a less-than-significant level.

SUMMARY OF ENVIRONMENTAL FACTORS POTENTIALLY AFFECTED

The environmental factors checked below identify "Potentially Significant Impacts" affected by this project, as indicated by the checklist on the following pages. However, as demonstrated in this Initial Study in the applicable topical sections mitigations

[1] Section 15063(a) (1) of the CEQA Guidelines requires that all phases of project planning, implementation, and operation must be considered in the Initial Study of the project.

are proposed for incorporation into the project that will reduce or eliminate these impacts to "Less Than Significant" or "No Impact."

[X] Aesthetics	[ ] Agricultural/Forestry Resources	[X] Air Quality
[ ] Biological Resources	[X] Cultural Resources	[X] Geology/Soils
[X] Hazards & Hazardous Materials	[X] Hydrology/Water Quality	[ ] Land Use/Planning
[ ] Mineral Resources	[ ] Noise	[ ] Population/Housing
[ ] Public Services	[ ] Recreation	[ ] Transportation/Traffic
[X] Utilities/Service Systems	[ ] Mandatory Findings of Significance	

DETERMINATION:

On the basis of information found in this initial evaluation, the City of St. Helena finds that:

[ ] The proposed project COULD NOT have a significant effect on the environment and a NEGATIVE DECLARATION will be prepared.

[✓] Although the proposed project could have a significant effect on the environment, there WILL NOT be a significant effect in this case because revisions in the project have been made or agreed to by the project proponent. A MITIGATED NEGATIVE DECLARATION will be prepared.

[ ] The proposed project MAY have a significant effect on the environment, and an ENVIRONMENTAL IMPACT REPORT is required.

[ ] The proposed project MAY have a significant effect(s) on the environment, but at least one effect: 1) has been adequately analyzed in an earlier document pursuant to applicable legal standards; and 2) has been addressed by mitigation measures based on the earlier analysis as described on attached sheets, if the effect is a "potentially significant impact" or "potentially significant unless mitigated." An ENVIRONMENTAL IMPACT REPORT is required, but it must analyze only the effects that remain to be addressed.

[ ] Although the proposed project could have a significant effect on the environment, because all potentially significant effects (a) have been analyzed adequately in an earlier EIR or NEGATIVE DECLARATION pursuant to applicable standards, and (b) have been avoided or mitigated pursuant to that earlier EIR or NEGATIVE DECLARATION, including revisions or mitigation measures that are imposed upon the proposed project, nothing further is required.

A Notice of Mitigated Negative Declaration has been prepared and posted for the period of August 12 – September 1, 2016.

[ ] DE MINIMIS IMPACT FINDING: finds that there is no evidence before the City that the proposed project will have the potential for an adverse effect on wildlife resources or the habitat upon which wildlife depends; therefore, on the basis of substantial evidence, the presumption of adverse effect is rebutted. A Certificate of Fee Exemption will be completed and filed with the Notice of Determination for the project.

[ ] Based on the information in this Initial Study, wildlife resources or the habitat upon which they depend may be impacted; therefore, even if the environmental effect is satisfactorily mitigated, the project is subject to the California Department of Fish and Wildlife Environmental Fee.

Noah Housh, Planning Director
City St. Helena

Date: August 12, 2016

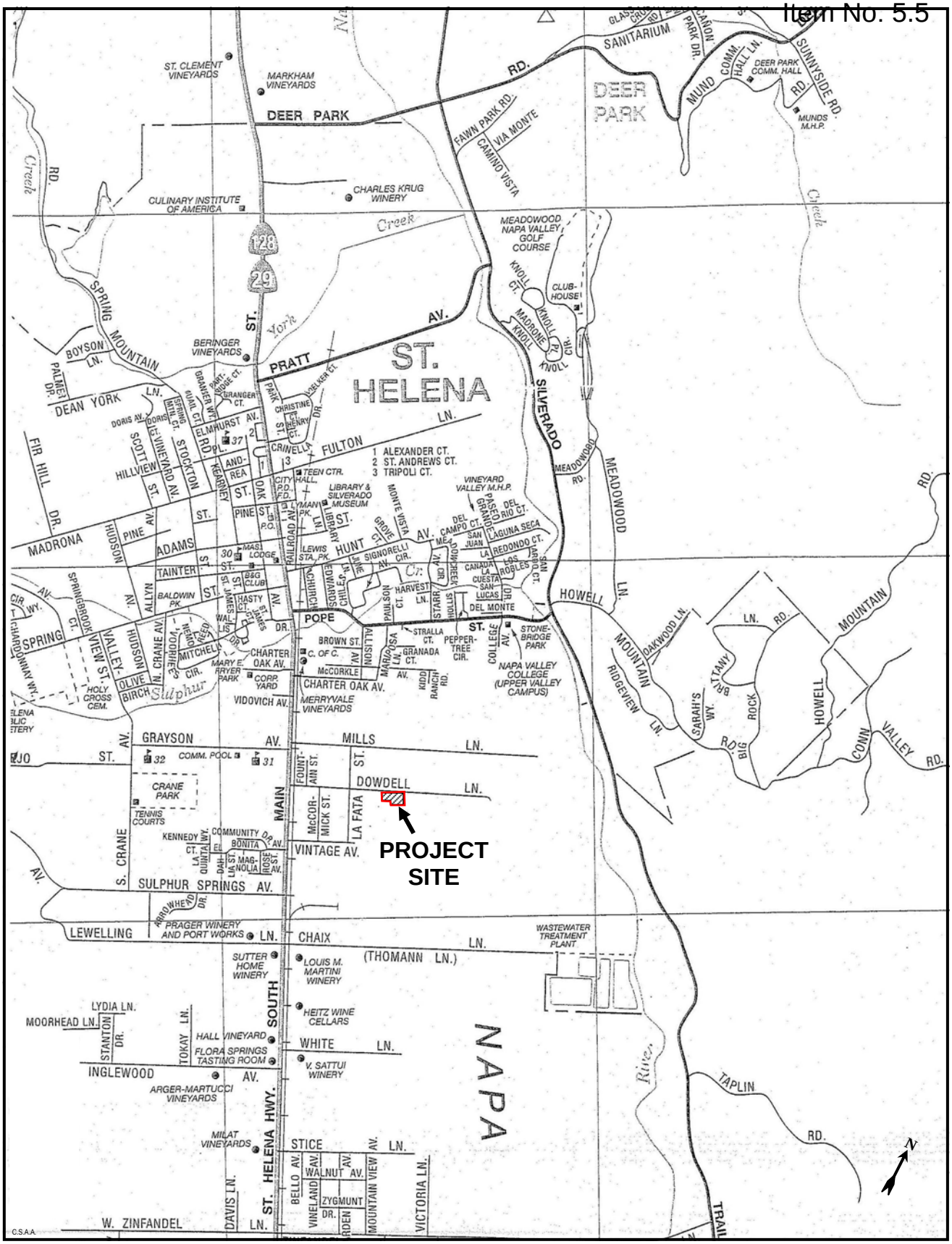

Exhibit 1

PROJECT LOCATION

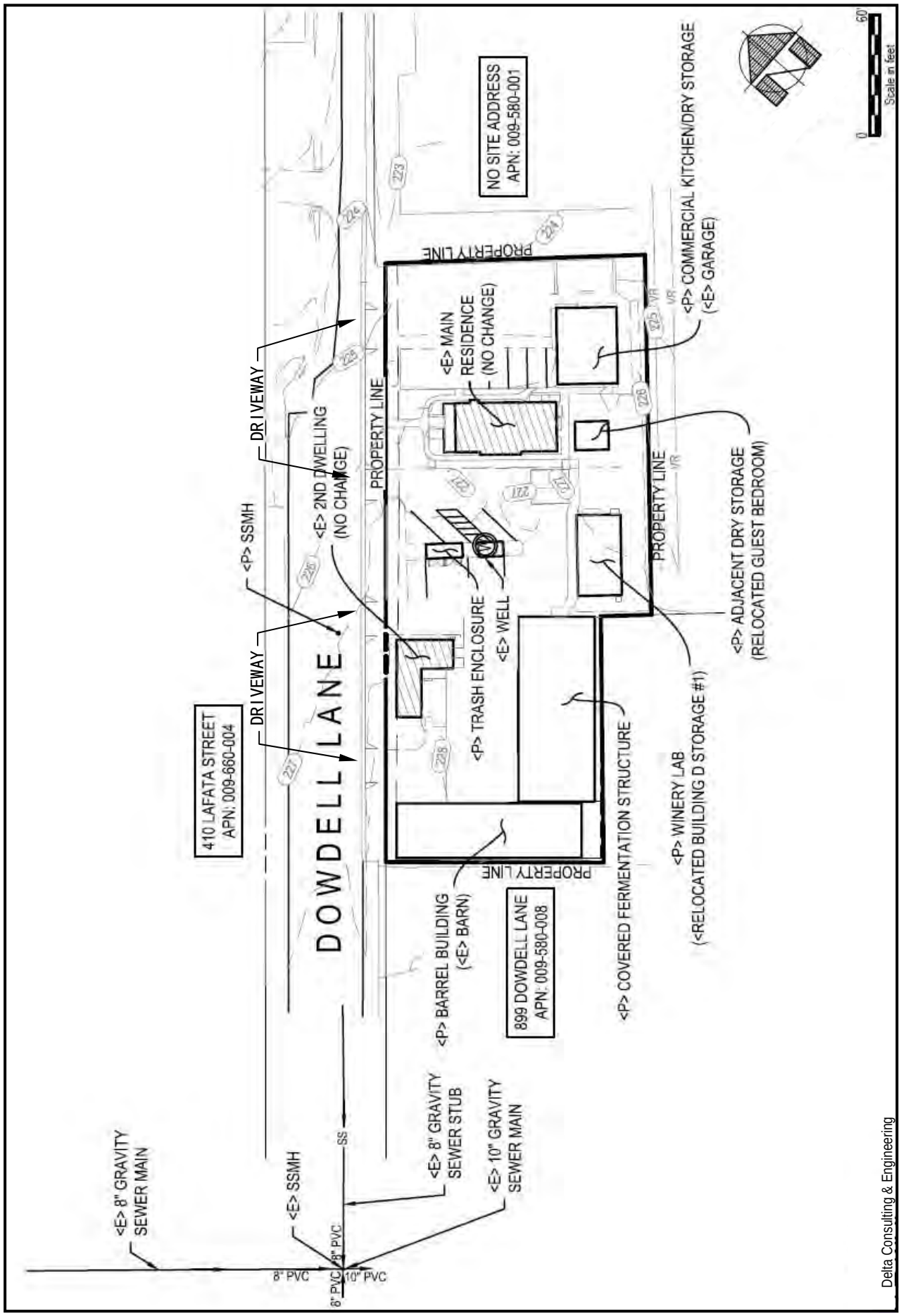

Exhibit 2
PROPOSED SITE PLAN

CITY OF ST. HELENA
REDMON RANCH WINERY
INITIAL STUDY

ENVIRONMENTAL CHECKLIST

This Environmental Checklist Form has been provided to assist in the analysis of the environmental issues associated with the project. The following standard rules, generated from the CEQA Guidelines, apply when completing and reviewing the Environmental Checklist Form:

1. *A brief explanation is required for all answers except "No Impact" answers that are adequately supported by the information sources a lead agency cites in the parentheses following each question. A "No Impact" answer is adequately supported if the referenced information sources show that the impact simply does not apply to projects like the one involved (e.g. the project falls outside a fault rupture zone). A "No Impact" answer should be explained where it is based on project-specific factors as well as general standards (e.g. the project will not expose sensitive receptors to pollutants, based on a project-specific screening analysis).*

2. *All answers must take account of the whole action involved, including off-site as well as on-site, cumulative as well as project-level, indirect as well as direct, and construction as well as operational impacts.*

3. *Once the lead agency has determined that a particular physical impact may occur, then the checklist answers must indicate whether the impact is potentially significant, less than significant with mitigation, or less than significant. "Potentially Significant Impact" is appropriate if there is substantial evidence that an effect may be significant. If there are one or more "Potentially Significant Impact" entries when the determination is made, an EIR is required.*

4. *"Negative Declaration: Potentially Significant Unless Mitigation Incorporated" applies where the incorporation of mitigation measures has reduced an effect from "Potentially Significant Impact" to a "Less Significant Impact." The lead agency must describe the mitigation measures, and briefly explain how they reduce the effect to a less than significant level (mitigation measures from Section 17, "Earlier Analysis," may be cross-referenced).*

5. *Earlier analysis may be used where an effect has been adequately analyzed in an earlier EIR or Negative Declaration. In this case, a brief discussion should identify the following:*
   a. *Earlier Analysis Used. Identify and state where they are available for review.*
   b. *Impacts Adequately Addressed. Identify which effects from the above checklist were within the scope of and adequately analyzed in an earlier document pursuant to applicable legal standards, and state whether such effects were addressed by mitigation measures based on the earlier analysis.*
   c. *Mitigation Measures. For effects that are "Less than Significant with Mitigation Measures Incorporated," describe the mitigation measures which were incorporated or refined from the earlier document and the extent to which they address site-specific conditions for the project.*

6. *Lead agencies are encouraged to incorporate into the checklist references to information sources for potential impacts (e.g. general plans, zoning ordinances). Reference to a previously prepared or outside document should, where appropriate, include a reference to the page or pages where the statement is substantiated.*

7. *Supporting Information Sources: A source list should be attached, and other sources used or individuals contacted should be cited in the discussion.*

8. *This checklist is only a suggested form, and lead agencies are free to use different formats. However, lead agencies should normally address the questions from this checklist that are relevant to a project's environmental effects in whatever format is selected.*

9. *The analysis of each issue should identify: (a) the significance criteria or threshold used to evaluate each question; and (b) the mitigation measure identified, if any, to reduce the impact to a level of less-than-significant.*

Environmental Issue Area	Potentially Significant Impact, Unmitigated	Potentially Significant Impact, Mitigated	Less Than Significant Impact	No Impact
1. AESTHETICS. *Would the project:*				
a. Have a substantial adverse effect on a scenic vista?				✓
b. Substantially damage scenic resources, including, but not limited to, trees, rock outcroppings, and historic buildings within a State scenic highway?				✓
c. Substantially degrade the existing visual character or quality of the site and its surroundings?				✓
d. Create a new source of substantial light or glare, which would adversely affect day or nighttime views in the area?		✓		

Discussion:

a. No parks, playgrounds, scenic vistas or other public gathering places are located on the project site that provide views of nearby vineyards, hillsides or other scenic features. No impacts would occur with respect to this topic.

b) No officially designated state scenic highways are located adjacent to or in the vicinity of the project site. State Route 29 (Main Street), is considered an eligible state scenic highway (it is not officially designated) and is located approximately 800 to 1000 feet west of the project site (http://www.dot.ca.gov/hq/LandArch/16_livability/scenic_highways/). No impacts would result with respect to this topic.

c. The site is in a designated industrial area currently developed with two dwellings, a large historic barn building, a garage and other small ancillary buildings. Uses to the north and west of the project site include light industrial and a winery complex under construction. Proposed improvements on the property to create a winery and commercial kitchen would include construction of a crush pad, relocation of small buildings on the site and demolition of one small building. However, proposed uses would generally be located in existing buildings that have been repurposed to accommodate proposed uses. The visual character and quality of the site would be consistent and compatible with adjacent light industrial uses and would not be substantially changed as a result of the proposed project. No impact would occur with respect to this topic.

d. It is likely that new exterior lighting fixtures would be proposed for the winery complex. Lighting could result in increased light and glare for nearby properties, motorists on Dowdell Lane and others. Therefore, this impact is considered potentially significant.

Mitigation Measure:

1. Consistent with Municipal Code Section 17.124.060(D), new exterior light fixtures shall be equipped with cut-off-lenses and directed downward so as to minimize off-site light and glare from the site and shall not be more than 15 feet in height.

Conclusion:

The project would not change the visual character of the project site or significantly degrade the visual character or quality of the site, since it is located within a developed light industrial area of the community. With implementation of the Mitigation Measure listed above, impacts to aesthetics would be considered ***less-than-significant.***

2. AGRICULTURAL & FORESTRY RESOURCES. *Would the project:*				
a. Convert Prime Farmland, Unique Farmland, or Farmland of Statewide Importance (Farmland), as shown on the maps prepared pursuant to the Farmland Mapping and Monitoring Program of the California Resources Agency, to non-agricultural use?				✓
b. Conflict with existing zoning for agricultural use or a Williamson Act Contract?				✓
c. Conflict with existing zoning for, or cause rezoning of forestland (as defined by PRC Sec. 12220(g), timberland (as defined in PRC Sec. 4526), or timberland zoned Timberland Production (as defined in PRC Sec. 51104 (g)?				✓
d. Result in the loss of forest land or conversion of forest land to non-forest use?				✓