CITY OF ST. HELENA

WATER AND SEWER STANDARDS

ADOPTED JUNE 22, 1993
RESOLUTION NO. 93-58
REVISED OCTOBER 27, 2015

STREET, STORM DRAIN & SIDEWALK STANDARDS

ADOPTED JUNE 23, 1998
RESOLUTION NO. 98-57
REVISED OCTOBER 27, 2015

TABLE OF CONTENTS

SECTION 1 GENERAL

1-1.01 Construction Limitations 1
1-1.02 Water for Construction and Dust Control 1
1-1.03 Protection of Existing Facilities and Property 1
1-1.04 Traffic Control 2
1-1.05 Plan for Protection from Caving 3
1-1.06 Preconstruction Conference 3
1-1.07 Shop Drawings 3
1-1.08 Referenced Specifications 4
1-1.09 Construction Stakes 4
1-1.10 Clean Up 4

SECTION 2 EARTHWORK

2-1.01 Earthwork 5
2-1.02 Subgrade Preparation 5
2-1.03 Trench Excavation 5
2-1.04 Protection of Vegetation 6
2-1.05 Unsuitable Material 6
2-1.06 Bedding 6
2-1.07 Pipeline Backfill 6
2-1.08 Compaction Requirement 7
2-1.09 Excess Material 7
2-1.10 Samples for Approval 7
2-1.11 CL II Aggregate Base 8

SECTION 3 ASPHALTIC CONCRETE SURFACING

3-1.01 Asphalt Concrete Surfacing 9
3-1.02 Asphalt Emulsion 9
3-1.03 Spreading Equipment 9
3-1.04 Pneumatic Rollers 10
3-1.05 Rolling Agents 10
3-1.06 Pavement Reinforcing Fabric 10

SECTION 4 CONCRETE

4-1.01 General 12
4-1.02 Expansion Joints 12
4-1.03 Curing Compound 12
4-1.04 Adhesive 12
4-1.05 Forms 12

4-1.06 Finish 12
4-1.07 Curb and Gutter 12
4-1.08 Sidewalk and Driveway 13
4-1.09 Base Material 14
4-1.10 Excavation 14

SECTION 5 STORM DRAIN

5-1.01 Reinforced Concrete Pipe 15
5-1.02 Cast-In-Place Concrete Pipe 15
5-1.03 Plastic Pipe 15
5-1.04 Installation of Pipe 15
5-1.05 Curb Inlets 15
5-1.06 Base Material 15
5-1.07 Excavation 15
5-1.08 Storm Drain Manholes 16
5-1.09 Adjust City Manholes to Paving Grade 16

SECTION 6 SANITARY SEWER SYSTEM

6-1.01 Materials 17
6-1.02 Acrylonitrile-Butadiene-Styrene (ABS) Pipe 17
6-1.03 Polyvinyl Chloride (PVC) Pipe 18
6-1.04 Ductile Iron Pipe (DIP) 19
6-1.05 Excavation and Backfill 19
6-1.06 Existing Manholes 19
6-1.07 Pipe Laying 20
6-1.08 Sewer Structures 22
6-1.09 Testing of Sewers 23
6-1.10 Trench Resurfacing 25
6-1.11 Mandrel Test 25
6-2.01 Permits 26
6-2.02 Pipe Size 26
6-2.03 Grades and Alignment 26
6-2.04 Backflow Device 26
6-2.05 Independent Systems 26
6-2.06 Cleanouts 27
6-2.07 Fittings 27
6-2.08 Proximity to Wells 27
6-2.09 Connecting Existing Buildings 27
6-2.10 Connection to Existing Sewers 27
6-2.11 Material 28
6-2.12 Pipe Cover and Clearance 28

SECTION 7 WATER SYSTEM

7-1.01 Description 29
7-1.02 Materials 29
7-1.03 Trench Excavation, Backfill and Resurfacing 34
7-1.04 Pipe Laying 34
7-1.05 Hot Tap Existing Main 36
7-1.06 Trench Shoring and Bracing 36
7-1.07 Pressure Test 37
7-1.08 Leakage Test 37
7-1.09 Flushing and Chlorinating 37
7-1.10 City-Owned Facilities 38
7-1.11 Water Main Tie-ins and Abandonments 38
7-1.12 Water Services 39
7-1.13 Fire Hydrant and Lateral Assembly 39
7-1.14 Meter Box Removal 39
7-1.15 Bury Existing Valve 39
7-1.16 Cut and Plug Existing Water Main 39

STANDARD DRAWING INDEX

DIVISION 100 - WATER

STANDARD NO.	TITLE
100	WATER MAIN CONSTRUCTION NOTES
101	FIRE HYDRANT
102	1" AND DOMESTIC WATER SERVICE
103	1" WATER SERVICE LATERAL INSTALLATION FOR TWO 5/8 METERS
104	1½", 2" AND LARGER DOMESTIC WATER SERVICE
105	3/4" - 2" DOUBLE CHECK VALVE TYPE BACKFLOW PREVENTER
106	REDUCED PRESSURE BACKFLOW PREVENTER
107	VOID
108	DOUBLE DETECTOR CHECK VALVE SINGLE & DOUBLE SERVICE
109	TYPICAL WATER SERVICE CONNECTIONS W/FIRE SERVICE
110	VOID
111	TYPICAL GATE VALVE AND VALVE BOX WITH RISER
112	TEMPORARY BLOW-OFF WITH MAIN LINE VALVE
113	TEMPORARY BLOW-OFF WITH HARNESS
114	CONCRETE ANCHOR BLOCKS FOR VERTICAL BENDS
115	CONCRETE THRUST BLOCKING
116	TYPICAL HARNESS INSTALLATION
117	TYPICAL WATER MAIN LOWERING DETAIL
118	TYPICAL WATER MAIN INSTALLATION OVER STRUCTURE
119	TYPICAL TEMPORARY BLOW-OFF AND/OR METERED CONNECTION MAINS UNDER CONSTRUCTION
120	6" AND 8" BLOW-OFF
121	4" WATER SERVICE LATERAL INSTALLATION FOR 4" METER
122	TYPICAL LOCATION OF WATER MAINS AND MAINLINE VALVES
123	TYPICAL DIRT STOP AND WATER MAIN ENCASEMENT
124	TRAFFIC TYPE PRECAST WATER UTILITY MANHOLE
125	TYPICAL INSTALLATION OF BUTTERFLY VALVE & TAPPING VALVE
126	TYPICAL INSTALLATION OF PRESSURE REDUCING VALVES
127	TYPICAL INSTALLATION OF SURGE ANTICIPATOR VALVE OR PRESSURE RELIEF VALVE
128	TYPICAL INSTALLATION OF AIR AND VACUUM & AIR RELEASE VALVE
129	WATER SEPARATION REQUIREMENTS

DIVISION 200 - SEWER

201	STANDARD 48" DIAMETER PRECAST CONCRETE MANHOLE SANITARY SEWER
202	STANDARD 60" DIAMETER PRECAST CONCRETE MANHOLE SANITARY SEWER
203	INSIDE DROP IN SANITARY SEWER MANHOLE
204	OUTSIDE DROP IN SANITARY SEWER MANHOLE
205	TEMPORARY MAINLINE CLEANOUT
206	TEMPORARY MAINLINE CLEANOUT
207	ABANDONED PIPE PLUG DETAIL
208	ABANDONED MANHOLE DETAIL
209	STANDARD PRECAST CONCRETE MANHOLE REDUCER SLAB SANITARY SEWER
210	STANDARD MANHOLE FRAME AND COVER
211	SEWER SERVICE LATERAL
212	SEWER SERVICE LATERAL
213	PIPE-STRUCTURE CROSSING DETAIL
214	PLASTIC SEWER PIPE DEFLECTION MANDREL
215	PRECAST GREASE INTERCEPTOR
216	SAND AND GREASE INTERCEPTOR

STANDARD NO.	TITLE
217	SAMPLING MANHOLE EXTERIOR USE
218	SAMPLING BOX BUILDING INTERIOR
219	CLEANOUT DETAIL AT BUILDING
220	TYPICAL SERVICE SEWER CONNECTION DETAILS
221	BACKWATER CHECK VALVE INSTALLATION
222	~~SERVICE SEWER TRENCH DETAIL~~ NOT USED
223	SEWER SEPARATION REQUIREMENTS

DIVISION 300 - STREET & ROADWAY

301	STANDARD HALF STREET SECTIONS
302	STRUCTURE DESIGN CHART FOR FLEXIBLE PAVEMENT
303	TRAFFIC INDEX CHART FOR FLEXIBLE PAVEMENT
304	TYPICAL CUL-DE-SAC
305	STANDARD STREET KNUCKLE RESIDENTIAL & MINOR STREETS
306	HAMMERHEAD TURNAROUND RESIDENTIAL PRIVATE STREETS AND ACCESS WAYS
307	EMERGENCY VEHICLE TURNOUT
308	SIDE STREET AND END OF OVERLAY CONFORM
309	EDGE GRINDING AT LIP OF GUTTER WITH OVERLAY SECTION
310	STANDARD CURB & GUTTER
311	STANDARD VERTICAL CURB
312	TRANSITION DETAIL ROLLED CURB TO STANDARD CURB & GUTTER
313A	STANDARD P.C.C. CROSS GUTTER
313B	STANDARD STREET PROFILE AT P.C.C. CROSS GUTTER
314	STANDARD DRIVEWAY APPROACH
315	STANDARD DETAILS SIDEWALK SECTIONS
316	STANDARD CURB RETURN CURB, GUTTER & SIDEWALK
317	WHEEL CHAIR RAMP 25' P/L RADIUS RETURN
318	WHEEL CHAIR RAMP 20' P/L RADIUS RETURN
319	TYPICAL SIDEWALK OBSTRUCTION TRANSITION
320	STREET WIDENING/PAVEOUT DETAIL
321A	STANDARD OFF STREET PARKING REQUIREMENTS
321B	STANDARD OFF STREET PARKING REQUIREMENTS
322	HANDICAPPED PARKING REQUIREMENTS
323	STRUCTURE PARKING STANDARDS
324	VISIBILITY AND FENCING REQUIREMENTS
325	~~STANDARD BACKFILL DETAIL~~ NOT USED
326	STANDARD PERMANENT MONUMENT
327	TYPICAL METHOD FOR SETTING APPURTENANCES
328	STANDARD BARRICADE
329	STANDARD WOOD TYPE GUARD RAIL
330	STANDARD METAL BEAM, GUARD RAIL
331A	STREET NAME SIGN INSTALLATION PUBLIC STREETS
331B	STREET NAME SIGN INSTALLATION PRIVATE STREETS
332	STREET NAME SIGN STANDARD SPECIFICATIONS
333	ADDRESS PAINTING ON CURB FACE
334A	STANDARD RESIDENTIAL STREET LIGHT
334B	STANDARD RESIDENTIAL STREET LIGHT
334C	STANDARD RESIDENTIAL STREET LIGHT
335	PAVEMENT MARKINGS: CENTER LINES, TWO-WAY LEFT TURN LANES, AND MEDIAN LANES
336A	TRAFFIC CONTROL REQUIREMENTS
336B	TRAFFIC CONTROL REQUIREMENTS
336C	TRAFFIC CONTROL REQUIREMENTS

DIVISION 400 - TRENCHING & UNDERGROUND

STANDARD NO.	TITLE
401	STANDARD TRENCH DETAIL

DIVISION 500 - STORM DRAINAGE

501	SIDEWALK CROSS DRAINS
502	STANDARD PRECAST STORM DRAIN MANHOLE
503	STORM DRAIN PRESSURE MANHOLES - CONCRETE COLLARS
504	STANDARD PRECAST CONCRETE STORM DRAIN MANHOLE REDUCER SLAB
505	TYPICAL STORM DRAIN OUTFALL DETAIL
506	REDWOOD BOX FIELD DRAIN
507	SPECIAL APRONS FOR 509 & 511 CATCH BASINS
508	STANDARD CONCRETE LINED INTERCEPTOR DITCH
509	CURB OPENINGS CATCH BASINS
510	PRECAST CATCH BASIN COVER
511	COMBINATION CURB OPENING/GRATE CATCH BASINS
512	STORM DRAIN GALLERY

DIVISION 600 - SPECIAL PAVING

600A	DOWNTOWN PAVING STONE SIDEWALK
600B	DOWNTOWN PAVING STONE SIDEWALK

DIVISION 700 - LANDSCAPE

701	STREET TREE PLANTING SPECIFICATIONS
702	STREET TREE PLANTING SPECIFICATIONS
703	METHODS TO BE USED IN TREE TRIMMING
704	STANDARDS FOR CROWN REDUCTION/THINNING OF TREES
705	STANDARD ROOT GUARD BARRIER SPECIFICATIONS

SECTION 1 GENERAL

1-1.01 Construction Limitations. The contractor will be expected to conduct his operations in a manner which creates minimum damage to the natural vegetation and landscape. Ingress and egress for all off road work shall be via the existing driveways. Care shall be exercised to avoid hazards that may cause injury to persons, animals or property either during working hours or after work hours, which will include dust control, backfilling trenches immediately following pipe laying and temporary fencing as required.

Prior to working in the City right-of-way the Contractor shall obtain an encroachment permit from the City. Work by City contract and work covered under a development agreement does not require an encroachment permit.

The Contractor will be responsible for obtaining permission from the property owners for any construction outside of the work site or easements as shown on the plans. Equipment will be restricted to the immediate area of construction. Pipe trenches will be backfilled as soon as possible.

Receptacles for construction residue, including oil, cleaning fluids, and litter will be covered. Such residues will be disposed of in a proper manner.

Dust control and prohibition of burning of waste construction materials or vegetation will be enforced for all construction activity.

All construction activity, except for emergency situations, will be confined to Monday through Saturday, between the hours of 8:00 a.m. and 6:00 p.m., to minimize nuisances to local business or residences.

Mufflers and/or baffles will be required on all construction equipment.

Construction activity within the existing right-of-way will be scheduled to minimize traffic inconvenience and safety hazards to motorists, pedestrians and cyclists.

1-1.02 Water for Construction and Dust Control. Contractor shall be responsible for providing all water necessary for construction and testing.

1-1.03 Protection of Existing Facilities and Property. The Contractor shall notify Underground Service Alert (USA) for marking the location of existing underground facilities.

The existing underground facilities in the area of work may include telephone, television and electrical cables, gas mains, water mains, sewer pipe and drainage pipe. The various utility companies shall be notified before trenching begins and at such other times as required to protect their facilities. Underground facilities shall be located and exposed ahead of trenching to prevent damage to the facilities, and to determine the depth and character of all facilities that cross or

infringe on the trench prism. The Contractor shall immediately notify the Engineer of any facilities found to differ from those shown on the drawings. If damage should occur to the existing facilities, the utility company and the City shall be notified immediately and repairs acceptable to the utility company shall be made at the Contractor's expense.

The location of the existing facilities are typically compiled from the best information available during design, however the locations of the underground facilities shown on the drawing are approximate only and should not be taken as final or all inclusive. The Contractor is cautioned that the drawings may be incomplete and the Contractor shall repair all damage done to existing facilities at his own expense.

Existing facilities shall not be intentionally disturbed and shall be supported and protected against injury and maintained in good operating condition at the expense of the Contractor for the entire duration of the contract.

Any proposed disruption of the existing facilities shall be approved by and coordinated with the Engineer.

<u>1-1.04 Traffic Control</u>. The site of the work shall be enclosed by suitable barricades, signs and lights to warn and protect traffic effectively and shall be in accordance with those procedures as set by the State of California Department of Transportation Manual of warning signs, lights and devices.

Excavation shall be backfilled before leaving the work for the night. All trenching in the travelway shall be plated with non-skid plates or paved (temporary or permanent) before leaving the work for the night.

All detours and traffic control shall be between 8:00 a.m. and 5:00 p.m.; unobstructed two-way traffic shall be maintained daily between 5:00 p.m. and 8:00 a.m. Any work within Caltrans right-of-way will require a separate encroachment permit from Caltrans.

Adequate traffic control, flagmen, signing and barricades shall be provided by the Contractor at all times as approved by the Engineer.

If at any time, work continues for more than one working day, advance warning signs affixed to 4" x 4" wooden posts anchored to the ground shall be used. At no time shall construction signs be attached in any way to power or light poles.

The Contractor shall be responsible for keeping the police and/or fire department informed of obstructions to either private or public roads caused by reasons of his operations. The Contractor shall make provisions for the safe passage of pedestrians around the area of work at all times.

1-1.05 Plan for Protection from Caving. In accordance with the latest requirements of the California Occupational Safety and Health Act and all such similar legislation, the Contractor shall submit to the Engineer for approval in advance of excavation a detailed plan showing the design, shoring, bracing, sloping, or other provision to be made for work or protection from the hazard of caving ground during the excavation of such trench or trenches. If such plan varies from the shoring system standards, the plan shall be prepared by a Registered Civil or Structural Engineer.

Nothing in this section shall be deemed to allow the use of shoring, sloping or protective system less effective than that required by the Cal-OSHA.

Nothing in this section shall be constructed to impose tort liability on the City of Engineer.

1-1.06 Preconstruction Conference. Prior to any work, the Contractor shall provide the Engineer and affected agencies with a list of key and responsible personnel and how they may be reached at any time. A preconstruction conference shall be scheduled, at which time the Contractor shall be required to present his proposed work schedule, information of off-site yards, subcontractors, location of disposal and stock pile areas, and traffic control plans. All such schedules shall be subject to the approval of the Engineer and the applicable agencies.

1-1.07 Shop Drawings. When shop drawings, of other drawings are required by the Plans and Specifications, or requested by the Engineer, they shall be prepared in accordance with current modern Engineering practice and at the Contractor's expense. Drawings shall be of a size and scale to clearly show necessary details and shall be transmitted by letter to the Engineer for approval or correction within at least fifteen (15) days of the Contract award.

Materials shall not be furnished or fabricated, nor any work done for which drawings are required before approval of the drawings.

When first submitted by the Contractor, each drawing shall be a good quality transparency accompanied by two prints. If approved without change or correction, three approved copies on paper will be furnished to the Contractor. If extensive additions or corrections are required, the Engineer will return one marked up copy to the Contractor, together with a transparency, for correction and resubmission. Approved transparencies will be retained by the Engineer. Approval of drawings by the Engineer shall not relieve the Contractor of the responsibility for errors of omissions in the drawings or from deviation from the contract documents, unless such deviations were those specifically called to the attention of the Engineer, and in the letter of transmittals submitted with the drawings. The Contractor shall be responsible for the correctness of the drawings for shop fits and fuel connections and for the results obtained by sue of such drawings.

Drawings required for conventional stock pumps, motors, and all other manufactured equipment may be brochures or catalogue sheet submitted in quadruplicate and shall show all necessary

dimensions required for the proper location and installation of tie down bolts, brackets, plumbing and other appurtenant detail.

When required by the Special Provisions, assembly drawings, parts list, nomenclature list or diagrams shall be furnished.

1-1.08 Referenced Specifications. City Standards shall mean City of St. Helena's Standard Plans and Specifications. ASTM shall mean American Society for Testing and Materials latest edition of the specifications. State Standards or State Standard Specifications shall mean State of California Department of Transportation Standard Specifications latest edition. Standard Specifications for Public Works Construction, (commonly called the "Green Book"), shall mean the latest edition of the Standard Specifications written and promulgated by the Southern California Chapter, American Public Works Association and the Southern California District, Association General Contractor's of California, a Joint Cooperation Committee.

1-1.09 Construction Stakes. When these specifications are used under the provisions of Divisions 2, 7, and 12 of the Streets and Highways Code or by City of St. Helena, the Engineer will set such stakes and marks as he deems necessary to establish such lines and grades required for the completion of the work specified in these Specifications and on the Plans or in the Special Provisions. The Contractor shall notify the Engineer of his need for such stakes and marks at least two (2) working days in advance of starting operations that require such stakes and marks. One set of each of the following stakes will be furnished the Contractor where required: right-of-way, clearing, slope stakes, grade stakes, stakes for structures and stakes for sewers, storm drains, and water mains.

Stakes or marks set by the Engineer shall be carefully preserved by the Contractor.

Finish grade stakes shall be offset from the edge of pavement, back of curb or sidewalk, and the center of pipe. The amount of offset shall be as agreed upon by the Engineer or Contractor. "Cuts" or "Fills" shall be given to the nearest 0.01 foot. Stakes shall be set at a maximum interval of 50 feet in the longitudinal direction or tangent portions, and a maximum interval of 25 feet for horizontal or vertical curves. Curb returns shall be stakes at the 1/4 points and at the radius point where practicable.

1-1.10 Clean Up. Attention is directed to Section 4-1.02 of the State of California Standard Specifications.

Before final inspection of the work, the Contractor shall clean the construction site and all ground occupied by him in connection with the work, of all rubbish, excess materials, false-work, temporary structures and equipment. All parts of the work shall be left in a neat and presentable condition.

Nothing herein, shall require the Contractor to remove warning, regulatory, and guide signs prior to formal acceptance by the Engineer.

SECTION 2 EARTHWORK

2-1.01 Earthwork. The earthwork involved shall conform to the provisions of Section 19 of the State Standard Specifications. It shall be the Contractor's responsibility to maintain said vertical cut. Should the City Engineer determine such vertical cut has been damaged, by his equipment or public traffic, the Contractor shall, at his expense and at the location determined in the field by the City Engineer, again saw cut and excavate in neat straight line. Where a new surface shall conform to existing surface, the existing surface shall be sawcut in a straight vertical line.

2-1.02 Subgrade Preparation. The finished subgrade immediately prior to placing subsequent material thereon shall have a relative compaction of not less than 95 percent (95%) for a depth of 0.5 feet as determined by Test Method No. Calif. 216 or as shown on the plans. The subgrade shall be smooth and uniform, and true to the required grade cross section, and shall be within the tolerance specified in these specifications or as shown on the plans. The Contractor shall repair at this expense any damage to a prepared subgrade caused by his operations or by use of public traffic. No material shall be placed upon the prepared subgrade until the subgrade is in condition meeting the requirements specified.

The surface of the grading plane at any point shall not vary more than 0.05 feet above or below the grade established by the Engineer.

Subgrade that does not conform to the above requirements shall be reshaped to conform to the specified tolerances and recompacted, all at the Contractor's expense.

2-1.03 Trench Excavation. The Contractor shall perform all excavations of every description and all substances encountered to the depth indicated on the drawings. During excavation that material suitable for backfilling shall be deposited in an orderly manner a sufficient distance from the banks for the trench to avoid overloading and to prevent slides or cave-ins. All excavated material not required or suitable for backfill shall be removed and disposed of outside the right-of-way of streets. The Contractor shall first obtain a written permit from the property owner on whose property the disposal is to be made and he shall file with the City Engineer said permit, together with a written release form the property owner absolving the City from any and all responsibility in connection with the disposal of material on said property. Material shall not be disposed of within any floodway in the City of St. Helena or County of Napa, or within the normal channel of any river, creek, stream, ditch, canal, swale or other watercourse and within portions of same as required to efficiently carry the flood flow as determined by the Engineer.

Trenches shall be the necessary width for proper laying of the pipe, and the banks shall be as nearly vertical as practicable. The bottom of the trenches shall be accurately graded to provide uniform bearing and support for each section of pipe on the prepared pipe bedding at every point along its entire length. Trenches shall be excavated to the depth indicated on the drawings and care shall be taken no to excavate beyond the depth indicated or required.

The Contractor shall at all times, furnish, install and maintain sufficient bracing and shoring in trenches to insure the safety of workmen and to protect and facilitate the work. All such bracing and shoring shall be removed from the trench as backfilling proceeds.

The Contractor shall furnish, install and operate such pumps or other devices as may be necessary for removing water from the trenches during construction.

2-1.04 Protection of Vegetation. When it is necessary to excavate adjacent to existing trees, shrubs, or hedges, the Contractor shall use all possible care to avoid injury to the trees, shrubs, or hedges, and their roots. Roots or limbs two (2) inches or larger in diameter shall not be cut without the express approval of the Engineer. All roots two (2) inches in diameter and larger left in place shall be wrapped with burlap to prevent scarring and excessive drying. When it is necessary to cut limbs and branches of trees to provide clearance for equipment used in construction, the Contractor shall make pruning cut just beyond the branch bark ridge. All cuts through ½ inch or larger roots and limbs, shall be hand trimmed and cleanly cut before being repaired.

2-1.05 Unsuitable Material. In those cases where the ground cannot provide firm support for the pipe in the judgment of the Engineer, or where rock is encountered, the Contractor shall excavate and remove the unsuitable material or rock to the width and depth ordered by the Engineer. Before the pipe is laid, the trench bottom shall be brought to grade with the bedding material in 3-inch compacted layers. If any trench, either through neglect, or at the convenience of the Contractor, is excavated below the bottom grade as required by the drawings, it shall be refilled to grade with bedding material at the Contractor's expense.

2-1.06 Bedding. Pipe bedding shall be 3/4" x 1/2' clean, crushed rock. The bedding shall be brought to a uniform compacted grade and bell holes formed to provide continuous support along the pipe barrel.

2-1.07 Pipeline Backfill. Pipeline trenches shall be backfilled with appropriate material to the level of the original ground surface, to the underside of the pavement base course, or as shown on the drawing, unless otherwise directed by the Engineer.

Before backfilling, the trench shall be cleared of all timber and debris such as wood blocks, grade stakes, paper, rope, rags, and broken pavement. Care shall be taken to insure that backfill material is free from debris.

All backfill material shall be placed in the trench to the full width as excavated. Backfill material shall not be dropped directly upon the pipe. All selected excavated material placed within six inches of the pipe shall be free from rocks and boulders larger than one inch in maximum dimension and from unbroken masses of earthy materials which might lodge and thereby cause unfilled pockets.

Initial backfill material for that portion of the trench from the grade of the pipe to a compacted depth of twelve (12) inches over the top of the pipe shall be Class II base, or as shown on the typical trench sections and specified herein, unless otherwise directed by the Engineer. After the pipe has been properly laid and inspected, initial backfill material shall be placed simultaneously on both sides and over the pipe in no greater than twelve (12) inch uncompacted lifts. Methods and equipment shall be subject to the approval of the Engineer.

Backfill material for the remainder of the pipe trench shall be as shown in the typical trench section and as specified herein.'

It is highly important that a dense, well compacted backfill be placed around the pipeline. The Contractor will be required to produce such a backfill, the amount thereof, and the manner of deposition shall be subject to the approval of the Engineer, but the Contractor will be held responsible for any displacement or instability of the pipeline or any damage to the coating caused by improper installation of backfill material.

No material shall be used for trench backfill, which, because of excessive moisture or any other reason, cannot be compacted to the degree specified. Any such material shall be considered unsuitable, and if it is deposited in the trench, it shall be removed and replaced with suitable material. In areas where Controlled Density Fill material (CDF) is required, the Contractor shall submit a design mix for the Engineer's approval.

During the process of backfilling, and timbering, sheeting, shoring, and sheet piling used to shore the excavation shall be carefully removed by the Contractor in such a manner as will result in a minimum of caving, lateral movement or flowing of the soil. On approval by the City Engineer, the Contractor may leave in place sheet piling, sheeting and bracing.

2-1.08 Compaction Requirement. Relative compaction shall be determined using ASSHO Test No. T 180.

The pipe bedding and initial backfill to a distance of twelve (12) inches over the top of the pipe shall be compacted per the relative compaction shown on the Standards herein unless otherwise shown and approved on the drawings.

2-1.09 Excess Material. Excess trench material shall be promptly removed and disposed of elsewhere by the Contractor at his own expense and profit. The Contractor shall not dump material on any private property without the permission of the owner thereof.

2-1.10 Samples for Approval. Representative samples of all material to be imported shall be submitted sufficiently in advance of installation operations for testing and approval of the Engineer. Imported material shall not be installed until it has been so approved.

Tests will be made in accordance with the following standards:

1. Grading - ASTM C114 and C136
2. Plasticity Index - ASTM D424
3. Sand Equivalent Value - Test Method No. Calif. 217 (CALTRANS)

2-1.11 CL II Aggregate Base. This work shall consist of furnishing, spreading and compacting Class II Aggregate in conformance with Section 26 of the most recent State Standard Specifications as shown on the plans, as specified in these specifications and as directed by the City Engineer.

Aggregate for the aggregate base shall conform to the following requirements immediately after being deposited on subgrade and prior to any subsequent manipulation.

Aggregate furnished for the aggregate base shall be free from vegetable matter and other deleterious substances, and shall be of such nature that it can be compacted readily under watering and rolling to and from a firm stable base. A sample of the base material shall be presented to the City Engineer for approval.

Aggregate base shall be delivered to the subgrade as a uniform mixture, and each layer shall be spread in one operation without segregation.

Where required thickness is 0.50 foot or more, the base material shall be spread and compacted in two or more layers of approximately equal thickness, the maximum compacted thickness of any one layer not to exceed 0.50 foot. Each layer shall be spread and compacted in a similar manner.

The aggregate base may be spread by any equipment that will produce a uniform layer without segregation.

The relative compaction of each layer of compacted base material shall not be less than ninety-five percent (95%) as determined by Test Method No. Calif. 216.

The surface of the finished base at any point shall not vary more than 0.05 for a foot above or below the grade established by the Engineer. Base which does not conform to the above requirements shall be reshaped, reworked, watered and thoroughly recompacted to conform to the specified requirements.

SECTION 3 ASPHALTIC CONCRETE SURFACING

3-1.01 Asphalt Concrete Surfacing. Type "A" surface course asphaltic concrete shall conform to Section 39 of the State Standard Specifications, meeting the one-half (½") inch maximum. medium grading aggregate requirements. Aggregate shall be proportioned by weight and properly mixed according to the provisions of Section 39-3 State Standard Specifications and shall be placed at the locations and the thickness shown on the plans and as directed by the City Engineer.

Asphalt binder shall be steam refined paving asphalt having a viscosity grade of AR-4000 and shall conform to provisions of Section 92 of the Standard Specifications.

3-1.02 Asphalt Emulsion. Asphalt emulsion for the application of the tack coat shall be applied with a distributor, which shall be kept on the job site during all phases of paving, and at the rate specified by the Engineer. Asphaltic emulsion shall be applied to all vertical surfaces of existing pavement, curbs, gutters, and construction joints in the surfacing against which additional material is to be placed, to a pavement to be surfaced and to other surfaces designated by the Engineer.

3-1.03 Spreading Equipment. Asphalt pavers shall be self-propelled mechanical spreading and finishing equipment, provided with a screed of strike-off assembly capable of distributing the material to not less than the full width of a traffic lane. Screed action shall include any cutting, crowding or other practical action which is effective on the mixture without tearing, shoving or gouging, and which produced a surface texture of uniform appearance. The screed shall be adjustable to the required section and thickness. The paver shall be provided with either a full width roller or tamper or other suitable compacting devices. Pavers that leave ridges, indentations or other marks in the surface that cannot be eliminated by rolling or prevented by adjustment in operation shall not be used.

The asphalt paver shall operate independently of the vehicle being unloaded and shall be capable of propelling the vehicle being unloaded in a satisfactory manner and if necessary, the load of the haul vehicle shall be limited to that which will insure satisfactory spreading. While being unloaded, the haul vehicle shall be in contact with the machine at all times, and the breaks on the haul vehicle shall not be depended upon to obtain contact between the vehicle and the machine.

Dumping of material in a windrow and then placing the material in the asphalt paver with loading equipment will not be permitted, unless the asphalt paver is of such design that the material will fall into a hopper which has a movable bottom conveyor to feed the screed, and the loading equipment is constructed so that substantially all of the material deposited on the roadbed in picked up and deposited in the paving machine.

3-1.04 Pneumatic Rollers. In addition to the requirements for pneumatic rollers in Section 39-5.02 of the State Standard Specifications, the roller shall be equipped so that the air pressure in all tires may be regulated uniformly by the operator while the roller is in motion.

3-1.05 Rolling Agents. A rolling agent in the proportions recommended by the manufacturer of such agent shall be added to the lubricating water used in the pneumatic-tire roller. The use of rolling agents and lubricating water will not be required if the pneumatic-tire roller is equipped with a tire heating device that will preheat the tire to a temperature of 105 degrees Fahrenheit.

Spreading, breakdown and compaction shall be in accordance with Section 39-6 of the State Standard Specifications and shall be completed while the temperature of the asphaltic concrete is 225 degrees Fahrenheit.

3-1.06 Pavement Reinforcing Fabric. Those areas to receive the reinforcing fabric will be marked in the field by the Engineer and shall consist of the following materials and shall be applied in accordance with those procedures outlined below:

The fabric and placement of fabric shall conform to the provisions of Section 88 of the Standard Specifications and these Special Provisions.

Prior to placing the fabric, the existing pavement to receive the fabric shall be cleaned of all materials such as, but not limited to, leaves, sand, dirt, gravel, water and vegetation.

Placement of the fabric shall be made only under the following conditions:

1. The ambient air temperature is above 50 degrees Fahrenheit and rising.

2. The pavement is dry and the pavement temperature is above 40 degrees Fahrenheit and rising.

The surface area to receive the fabric shall be sprayed with steam-refined paving asphalt type AR-4000 at the rate of 0.22 - 0.28 gallons per square yard. The Contractor's attention is directed to section 92-1.04, "Applying", of the State of California Standard Specifications. The exact rate of application will be determined by the Engineer. The asphalt shall be sprayed with a suitably metered truck and the truck must have been recently calibrated by test method California No. 399A. The temperature of the asphalt binder must be spread between 290 degrees F. and 365 degrees F.

The width of asphalt application will be the fabric width plus 4 inches. Paving asphalt shall be applied no farther in advance of the fabric than the distance the Contractor can maintain free of traffic. The paving operation shall closely follow fabric placement and no more fabric than can be covered up with the hot mix that working day shall be placed.

The fabric shall overlay 2-6 inches at all joints. No joints shall be lapped with more than two layers of fabric. Transverse joints shall be shingled in the direction of the paving to prevent edge pick-up by the paver.

The fabric shall be placed on the asphaltic binder with a minimum of wrinkles and broomed or squeegeed to remove any bubbles prior to the binder cooling. The equipment for placing the fabric shall be mechanized and capable of handling full rolls of material and shall be capable of laying the fabric without forming excessive wrinkles and/or folds. As directed by the Engineer, if folds or wrinkles 1/2 inch in height or greater exist, the fabric shall be slit and allowed to lay flat. Brooming will maximize fabric contact with the pavement surface. The equipment used to place the fabric is subject to approval by the Engineer.

At all utility covers which could be covered with fabric, the fabric shall be neatly cut around the cover to allow for raising the cover to finished grade.

Turning of the paving machine or other vehicles should be gradual and shall be kept to a minimum to avoid damage to the membrane. Should equipment tires stick to the fabric during pavement operations, small quantities of asphaltic concrete shall be broadcast ahead to prevent sticking.

SECTION 4 CONCRETE

4-1.01 General. All Portland cement concrete used for construction of curbs, gutters, sidewalks, and driveways shall be Class A concrete conforming to the provisions of Section 90 of the Standard Specifications. The maximum slump shall be 3", minimum compressive strength at 28 days shall be 3,000 lbs per square inch. Work shall conform to Section 73 of the Standard Specifications and the City of St. Helena Standards.

4-1.02 Expansion Joints. All expansion joints material for installation in curb, gutters, sidewalks and driveways shall conform to City of St. Helena Standard Plans.

4-1.03 Curing Compound. Curing compound shall conform to AASHTO Designation M-148 Type II, white pigmented, and shall consist of a practically colorless, impervious liquid which will thoroughly seal the surface of the concrete and will not impart a slippery surface thereto. The liquid shall contain a coloring matter which does not permanently alter the natural color of the concrete, but which colors sufficiently at the time of application to indicate the areas covered. The use of any membrane material which would impart slippery surface to the pavement or alter its natural color will not be permitted. The colorless impervious liquid shall contain not less than twenty-five percent (25%) solids.

4-1.04 Adhesive. Adhesives used to bind new concrete to existing concrete or asphaltic concrete surface shall be used only after approval of the City Engineer.

4-1.05 Forms. Forms shall be true and shall have a smooth, straight upper edge. Timber forms shall be surfaced on the side placed next to the concrete, shall have true surfaced upper edge and shall be not less than one and five-eighths inches (1 5/8") after being surfaced. All forms shall be thoroughly cleaned and coated with form oil to prevent the concrete from adhering to them. The depth of forms for back of curbs shall be equal to the full back face height of curb. Lower read edge of front face form for curb shall be milled to a 1" radius. Forms shall be carefully set to alignment and grade and shall conforms to the required dimension. Forms shall be held rigidly in place by stakes placed at intervals not to exceed 3 feet. Clamps, spreaders, and braces shall be used where required to insure rigidity in the forms. Benders or thin plank forms may be used on grade changes or for curb returns. Back forms for curb returns may be made of ½" thick benders cleated together for the full depth of the curb. The form on the front face of the curbs shall be removed in less than two (2) hours, however in no event shall forms be removed while the concrete is sufficiently plastic to slump. Side forms for sidewalks, local depressions and driveways shall not be removed in less than 12 hours after the finishing has been completed.

4-1.06 Finish. All exposed surfaces shall have a fine broom finish.

4-1.07 Curb and Gutter. In construction curbs, entrances shall be provided for driveways to replace former facilities. The entrances shall of the dimensions shown on the Standard Plans or as directed by the City Engineer.

Weakened plane joints shall be constructed per City Standards, except that when portland cement concrete pavement is adjacent thereto, or to be constructed adjacent thereto, the joints shall coincide with the weakened plan joints in the adjacent pavement. The joints shall be constructed to a minimum depth of one and one-half inches. Scoring shall be with a tool which will leave the corners rounded and insure free movement of the concrete at the joint, or by sawing the hardened concrete and covering the exposed area with curing compound.

Expansion joints, ¼" wide, shall be constructed at each side of structures, at the ends of curb returns, ends of driveways and elsewhere per City Standards. Where possible, expansion joints in curb and gutter shall be set co-linear with the joints of the sidewalk. Expansion joint filler shall be pre-molded material conforming to the Standard Plans. Expansion joint material shall be shaped to the cross section of the curb and gutter and shall be installed at right angles to the curb face. A construction joint shall be installed when the delay between successive pours exceed the time of initial set.

Concrete shall be placed and compacted in forms without segregation. Prior to the removal of the forms, the surface shall be finished true to grade by means of a straight edge float, no less than 10 feet in length, operated longitudinally over the surface of the concrete. Form clamps shall be constructed so as not to interfere with the operation of this float. Immediately after removing the front curb form, the face of the curb shall be troweled smooth and then finished with a steel trowel. The top shall be finished and front and back edges rounded as shown on the Standard Plans. After the face of the curb has been troweled smooth, it shall be give a final brush finish with brush strokes parallel to the line of the curb. The top and face of the finished curb shall be true and straight and the top surface of the curb shall be of uniform width, free from bumps, sags, or other irregularities. When a straightedge ten feet (10') long is laid on top or the face of curb, or on the surface of the gutter, the surface shall not vary more than 0.01 foot from the edge of the straightedge, except at grade changes or curves. Where the grade is less than one percent (1%), a water flow test will be required to determine depressions in the gutter. Exposed surfaces of curbs and gutters shall be cured by the pigmented curing compound as provided in Section 4 "Concrete". The Contractor shall clean, at his own expense, all discolored concrete. The concrete may be cleaned by abrasive blast cleaning. Repairs shall be made by removing and replacing the entire unit between scoring lines or joints. Repaired sections shall be doweled to existing curb and gutter by the use of dowels or by application of epoxy adhesive to the existing concrete.

4-1.08 Sidewalk and Driveway. Fresh concrete shall be struck off and compacted until a layer of mortar has been brought to the surface. The surface shall be finished to grade and cross sectioned with a wood or aluminum float, troweled smooth and finished with a broom. The float shall be not less than ten feet (10') in length and not less than six inches (6") in width. Brooming shall be traversed to the line of traffic and if water is required, it shall be applied to the surface immediately in advance of brooming.

The surface of the sidewalk shall be marked into rectangles of not more than five (5) lineal feet in length, as directed by the Engineer with a one-half inch (½") scoring tool which will leave

the edges round. Driveway approaches shall be scored at the bottom of the curb breakdowns and evenly across the apron.

Expansion joints one-quarter inch (¼") wide shall be constructed at all returns and opposite expansion joints in adjacent curbs and as shown on the Standard Plans. Expansion joint filler shall be shaped to fit the concrete that is being placed.

4-1.09 Base Material. Base material under concrete sidewalk shall be 4" untreated base and 6" untreated base in the driveway areas and conform to the provision in Section 26-1.02B of the State Standard Specification and shall be placed and compacted in conformance with the requirements specified in the City of St. Helena Standard Plans. Base material under concrete curb and gutter shall be untreated base, four inches (4") thick and shall conform to the provisions in Section 26-1.02B of the State Standard Specifications and as specified in these specifications.

4-1.10 Excavation. All excavation involved in constructing curb, gutter, sidewalk, and driveways will be in accordance with Section 2, "Earthwork" of these Specifications.

CITY HALL, 1480 MAIN STREET
ST. HELENA, CALIFORNIA 94574
(707) 963-2741

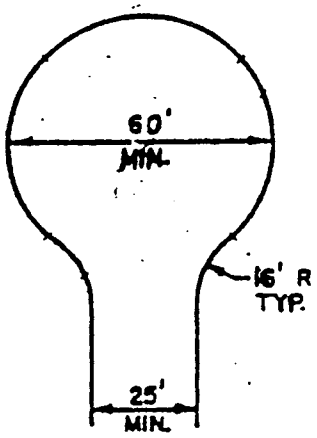

CUL-DE-SAC
(No Parking)

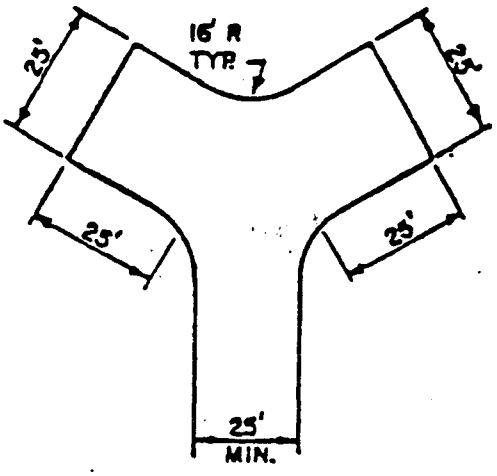

120° HAMMERHEAD
(No Parking)

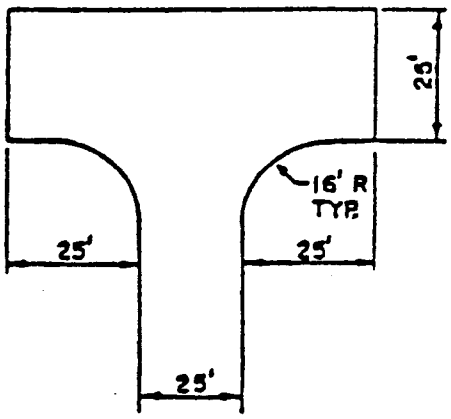

HAMMERHEAD

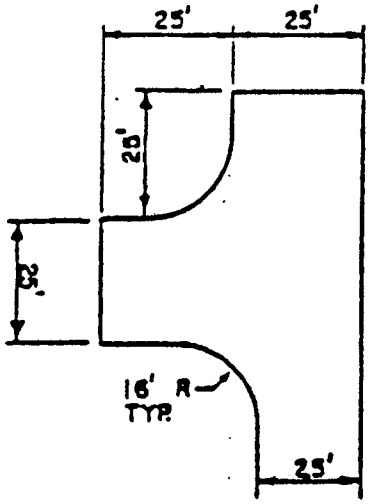

Emergency Vehicle Turn-Arounds.
Private Street Standards

9/22/93

CITY OF ST. HELENA

ORDINANCE NO. 99-11

AMENDING CHAPTER 5A OF THE ST. HELENA CITY CODE; ADOPTING BY REFERENCE THE 1998 CALIFORNIA FIRE CODE, THE 1997 UNIFORM FIRE CODE STANDARDS AND AMENDMENTS THERETO

BE IT ORDAINED by the City Council of the City of St. Helena, State of California, as follows:

SECTION 1. Chapter 5A, Sections 5A.11, 5A.12, and 5A.13 of the St. Helena City Code are hereby repealed.

SECTION 2. Chapter 5A, Sections 5A.11, 5A.12, and 5A.13 of the St. Helena City Code are hereby added to read as follows:

Sec. 5A.11. Codes adopted.

The California Fire Code, 1998 Edition, including specifically appendices II-A, II-B, II-F, II-G, II-H, III-A, III-B, III-C, III-D, IV-A, IV-B, V-A, VI-A, VI-B, BI-D, VI-E, VI-F and the Uniform Fire Code Standards 1997 Edition, compiled and published by the International Conference of Building Officials and the Western Fire Chiefs Association, Inc., is adopted by reference the same as though fully set forth herein, save and except those portions hereinafter deleted, modified or amended by Section 5A.13.

Sec. 5A.12. Specific findings for code amendments.

Each amendment to the Uniform Fire Code and California Fire Code adopted by this chapter, is reasonably necessary because of the following determinations due to local climatic, geological, or topographic conditions pursuant to Health and Safety Code, section 17958.5:

a. The City of St. Helena is characterized by a narrow valley floor surrounded and intermingled with steep hill terrain, containing areas which are very susceptible to wildland fires. Wildland fires are considered a significant threat in St. Helena. Native vegetation of brush, woodland, grassland and forest become extremely flammable during summer and remain so if drought conditions prevail during the winter months. Drought cycles appear in this area every 7-11 years.

b. Earthquake is considered to be one of the most potentially destructive threats to life and property in the City of St. Helena. A moderate to severe seismic incident on any of the several fault zones in relative close proximity to St. Helena is expected to cause extensive property damage, disruptions to communications systems, and damage to public utility systems.

c. St. Helena is divided geographically into two parts by the north to south flow of the Napa River. Significant damaging flooding occurs in portions of the City of St. Helena approximately every five to ten years. Warnings are usually given several hours to a few days before such floods. This natural barrier can serve as a severe impediment

public safety services because of the severity of slopes, and the existence of natural barriers such as the Napa River, Sulphur Creek, and York Creek.

Sec. 5A.13. Amendments to fire codes.
Based upon the findings set forth in sec. 5A.12, the following sections and/or subsections of the California Fire Code, 1998 Edition, are hereby amended to read as follows:

SECTION 103 -- INSPECTION AND ENFORCEMENT

Section 103.2.1.1 is amended to read:

103.2.1.1 General. The chief is authorized to administer and enforce this code. Under the chief's direction, the fire department is authorized to enforce all ordinances of the jurisdiction pertaining to:

1. The prevention of fires,
2. The suppression or extinguishment of dangerous or hazardous fires,
3. The storage, use and handling of hazardous materials,
4. The installation and maintenance of automatic, manual and other private fire alarm systems and fire-extinguishing equipment,
5. The maintenance and regulation of fire escapes,
6. The maintenance of fire protection and the elimination of fire hazards on land and in buildings, structures and other property, including those under construction,
7. The maintenance of exits, and
8. The investigation of the cause, origin and circumstances of fire and unauthorized releases of hazardous materials.

In addition to potential civil and/or criminal penalties, any person, individual, group of individuals, firm, trust, corporation, partnership association, or business concern responsible for an unauthorized release of hazardous material, a malicious false alarm, excessive unintentional false alarms, or igniting and/or maintaining an illegal fire, shall be liable for reimbursing the City of St. Helena for all costs incurred resulting from the city's emergency response and mitigation activities involving these incidents. Incurred costs may include such activities as firefighting, rescue, evacuation, hazardous material containment, control and /or disposal, incident investigation, report writing, administrative costs, and additional mitigation activities that may be contracted by the City.

Section 103.2.1.2 is amended to read:

103.2.1.2 Fire prevention bureau personnel and police. The chief, the fire marshal, and certain other officers of the Fire Department designated by the Chief shall have the powers of a Police Officer in performing their duties under this code.

Section 103.3.1.1 is amended to read:

103.3.1.1 Authority to inspect. The fire prevention bureau shall inspect, as often as necessary, buildings and premises, including such other hazards or appliances designated by the chief for the purpose of ascertaining and causing to be corrected any conditions which would reasonably tend to cause fire or contribute to its spread, or any violation of the purpose or provisions of this code and of any other law or standard affecting fire safety.

The fire inspection bureau shall conduct inspections of all buildings and premises with the following uses in the intervals specified and at the fee rate established by the City Council.

Occupancy classification	
"A"	Annually
"B"	Bi-annually
"F"	Annually
"H"	Annually
"M" (<2500 sq.ft)	Bi-annually
"M" (≥ 2500 sq. ft.)	Annually
"S"	Annually
"U"	Exempt

Occupancies classed as Groups E, I, and R shall be inspected annually as required in Title-19.

Section 103.3.2.1 is amended to read:

103.3.2 New construction and alterations.

103.3.2.1 General. The fire chief shall review all building permit applications and construction plans submitted to the building department for the purpose of ascertaining and causing to be corrected any condition liable to cause fire or endanger life from fire or panic or any violation of this Code, state law or regulation, or any local ordinance or standard which may be under the jurisdiction of the chief. Construction or work for which fire department approval is required shall be subject to inspection by the chief and such construction or work shall remain accessible and exposed for inspection purposes until approved by the chief.

Section 103.3.5 is added to read:

103.3.5 Fees for Inspections, Plan Checks and Permits. The St. Helena City Council has, by resolution, established a schedule of fees to be charged and collected for inspection services, plan checking and for issuance of permits. A copy of the current fee schedule shall be kept in the office of the City Clerk and the office of the Fire Department and Building Department for public inspection.

b. SECTION 105 – PERMITS

Section 105.3 is amended to read:

105.3 Application for Permit. Applications for permits shall be made to the building department in such form and detail as prescribed by the bureau. Applications for permits shall be accompanied by such plans, specifications and calculations as required by the bureau.

105.3.1 Information on Plans and specifications. Plans and specifications shall be drawn to scale upon substantial paper and shall be of sufficient clarity to indicate the location, nature and extent of any work proposed and show in detail that it will conform to the provisions of this code and all relevant laws, ordinances, rules and regulations.

105.3.2 Issuance. The application, plans , specifications, computations and other data filed by an applicant for permit shall be reviewed by the fire marshal. Such plans may be reviewed by other departments of this jurisdiction to verify compliance with any applicable laws under their jurisdiction.

105.3.3 Approved Plans. When the fire marshal issues the permit where plans are required, she or he shall endorse, in writing, or stamp the plans and specifications "APPROVED". Such approved plans and specifications shall not be changed, modified or altered without authorization from the fire marshal and all work regulated by this code shall be done in accordance with the approved plans.

The fire marshal may issue a permit for the construction of part of an installation before the entire plans and specifications for the whole installation have been submitted or reviewed, provided adequate information and detailed statements have been filed complying with all pertinent requirements of this code. The holder of such permit shall proceed at his or her own risk without assurance that the permit for the entire installation will be granted.

105.3.4 Retention of Plans. One set of reviewed plans, specifications and computations shall be retained by the fire marshal until completion of the work covered therein; and one set of reviewed plans and specifications shall be returned to the applicant, and such set shall be kept on the site of the building or work at all times during which the work authorized thereby is in progress.

105.3.5 Validity of Permit. The issuance or granting of a permit for review of plans, specifications ad computations shall not be construed to be a permit for, or an approval of, any violation of any of the provisions of this code or of any other ordinance of the jurisdiction. Permits presuming to give authority to violate or cancel the provisions of this code or other ordinances of the jurisdiction shall not

be valid.

The issuance of a permit based upon plans, specifications and other data shall not prevent the fire marshal from thereafter requiring the correction of errors in such plans, specifications and other data, or from preventing building operations being carried on thereunder when in violation of this code or of any other ordinances of this jurisdiction.

105.3.6 Suspension or Revocation. The fire marshal may, in writing, suspend or revoke a permit issued under the provisions of this code whenever the permit is issued in error or on the basis of incorrect informative supplied, or in violation of any ordinance or regulation or any of the provisions of this code.

105.3.7 Permit Fees. Fees shall be assessed in accordance with the provisions as set forth in the fee schedule adopted by the City.

105.3.8 Plan Review Fees. When a plan or other data are required to be submitted by Section 105.3, a plan review fee shall be paid upon submittal of plans to the Fire Department. Such plan review fee shall be charged at the prevailing rate.

The plan review fees specified in the subsection are separate fees from the permit fees, specified in Section 105.3.7, and are in addition to the permit fees.

Where plans are incomplete or changed so as to require additional plan review, an additional plan review fee shall be charged at the established hourly inspection rate.

105.3.9 Expiration of Plan Review. Applications for which no permit is issued within 180 days following the date of application shall expire by limitation, and plans and other data submitted for review may thereafter be returned to the applicant or destroyed by the fire marshal. The fire marshal may extend the time for action by the applicant for a period not exceeding 180 days upon request by the applicant showing that circumstances beyond the control of the applicant have prevented action from being taken. No application shall be extended more than once. In order to renew action on an application after expiration, the applicant shall resubmit plans and pay a new plan review fee.

105.3.10 Work Without a Permit. Investigation. Whenever any work for which a permit is required by this code has commenced without first obtaining such permit, a penalty fee may be assessed in addition to regular permit fees.

105.3.11 Fee Refunds. The fire chief may authorize the refunding of any fee paid hereunder which was erroneously paid or collected.

105.3.11.1 The fire chief may authorize the refunding of not more than 80

percent of the permit fee paid when no work has been done under a permit issued in accordance with this code.

105.3.11.2 The fire chief shall not authorize the refunding of any fee paid except upon written application filed by the original permittee not later than 180 days after the date of fee payment.

105.3.12 Before a permit may be issued under Section 105.8 or before final approval of the construction of fire projects, systems or components is authorized, the chief or the chief's authorized representative shall inspect and approve the receptacles, buildings, devices, premises, storage spaces or areas to be used. In instances where laws or regulations are enforceable by departments other than the fire department, joint approval shall be obtained from all departments concerned.

105.3.12.1 It shall be the duty of the permit applicant to cause the work to remain accessible and exposed for inspection purposes. Neither the fire official nor the jurisdiction shall be liable for expense entailed in the removal or replacement of any material required to allow inspection.

105.3.12.2 Approval as a result of an inspection shall not be construed to be an approval of a violation of the provisions of this code or of other ordinances of the jurisdiction. Inspections presuming to give authority to violate or cancel the profusions of this code or of other ordinances of the jurisdiction shall not be valid.

105.3.13 Inspection Request. It shall be the duty of the person doing the work authorized by a permit to notify the fire marshal that such work is ready for inspection. The fire marshal may require that every request for inspection be filed at least two (2) working day before such inspection is desired. Such request may be in writing or by telephone at the option of the fire marshal.

It shall be the duty of the person requesting any inspections required by this code to provide access to and means for inspection of such work.

105.8 Permit Required.

Section 105.8 f.1.1 is added to read:

f.1.1. Fire protection systems. To install, alter, repair, make inoperable or remove any fire protection system.

Section 105.8.r.4 is added to read:

r.4. Restaurant hood and duct fire extinguishing equipment. To operate a restaurant with a hood and duct fire extinguishing system.

c. SECTION 901 -- GENERAL

Section 901.3 is amended to read:

901.3 Timing of Installation. When fire protection, including fire apparatus roads and water supplies for fire protection, is required to be installed, such protection shall be installed and made serviceable prior to and during the time of construction. Plans shall be submitted for the construction of all temporary fire apparatus roads and water supplies at the time of building permit application.

Section 901.4.2 is amended to read:

901.4.2 Marking of roads. Approved signs or other approved notices shall be provided and maintained for access roads and driveways to identify such roads and driveways to identify such roads and prohibit the obstruction thereof or both.

Existing and new roads shall be identified as set forth in this section. All road identification signs and supports shall be of noncombustible materials. Signs shall have minimum 4-inch reflective letters with ½ inch stroke on a contrasting 6-inch-high sign. Road identification signage shall be mounted at a height of 7 feet from the road surface to the bottom of the sign. Road signs for existing roads shall be installed as required by this section by January 1, 1999.

Section 901.4.4 is amended to read:

901.4.4 Premises identification. Approved numbers or addresses shall be placed on all new and existing building in such a position as to be plainly visible and legible from the street or road fronting the property. Numbers shall contrast with their background and shall not be less than ~~5~~ 4" in height. House numbers shall not be obstructed by vegetation. Any building located more than 50 feet from the street shall have its address posted at the driveway entrance and shall be visible from both directions of travel along the road. In new construction, the address shall be posted at the beginning of construction and shall be maintained thereafter, and the address shall be visible and legible from the road on which the address is located.

Where multiple addresses are required at a single driveway, they shall be mounted on a single post, and additional signs shall be posted at locations where driveways divide.

Where a roadway provides access solely to a single commercial or industrial business, the address sign shall be placed at the nearest road intersection providing access to that site.

d. SECTION 902 -- FIRE DEPARTMENT ACCESS

Section 902.2.2.1 is amended to read:

902.2.2 Specifications

902.2.2.1 Dimensions. Fire apparatus access drives shall have an unobstructed width of not less than the following dimensions (includes 2-2' shoulders):

Residential	**Width**
Single Family Residence	16'
2 - 10 units	20'
11 - 60 units	25'
over 60 units	30'
Non-residential	
One-way access drive	16'
Two-way access drive	25'

The minimum vertical clearance shall be 13'6" at all points across the required width of the access drive. Vertical clearance may be increased as determined necessary by the Fire Chief.

Section 902.2.2.4 is amended to read:

902.2.2.4 Dead ends. Dead-end fire apparatus access roads in excess of 150 feet (45720 mm) in length shall be provided with approved provisions for the turning around of fire apparatus. Fire apparatus turnarounds shall be constructed to the criteria set forth in the St. Helena Standard Specifications for Public Improvements, or as approved by the City Engineer and Fire Chief.

Section 902.2.2.6 is amended to read:

902.2.2.6 Grade. The gradient for a fire apparatus access road shall not exceed a grade of 16%, except that one run of one hundred (100) feet or less in length may be at 18% grade upon approval of the Fire Chief.

Section 902.2.2.7 is added to read:

902.2.2.7 Speed Control Devices. Speed bumps, dips or other surface modifications intended to reduce speed are prohibited in any public or private fire access road, drive or parking area. All such devices installed prior to the effective date of this requirement shall be removed by January 1, 2000.

Section 902.2.2.8 is added to read:

902.2.2.8 Emergency turnout and staging area. One emergency vehicle turnout area shall be provided at every 500 feet of access drive length. Design shall meet criteria set forth in the St. Helena Standard Specifications for Public Improvements, or as approved by the City Engineer and Fire Chief.

Section 902.2.4.1 is amended to read:

902.2.4 Obstruction and control of fire apparatus access.
902.2.4.1 General. The required width of a fire apparatus access road shall not be obstructed in any manner, including parking of vehicles. Minimum required widths and clearances established under Section 902.2.2.1 shall be maintained at all times.

Entrances to roads, trails or other accessways which have been closed with gates and barriers in accordance with Section 9022.4.2 shall not be obstructed by parked vehicles. A key box, approved by the Fire Chief, shall be installed on any gate, chain or other lockable obstruction in a fire access road where emergency vehicle access is restricted due to secured access.

Section 902.4 is amended to read:

902.4 Key boxes. Key boxes are required to be installed on all buildings whenever a building permit is issued. Key boxes are required to be installed on a building within 60 days of an annual- or bi-annual fire inspection required by section 103.3.1.1 of this code. The key box shall be of a type approved by the chief and shall contain keys, plans and other information to gain necessary access as required by the chief.

EXCEPTION: R-3 and U occupancies when authorized by the Fire Chief.

d. SECTION 903 – WATER SUPPLIES AND FIRE HYDRANTS

Section 903.2, is amended by adding a second paragraph to read as follows:

903.2 Required Water Supply for Fire Protection. Fire hydrants shall be located not more than 100 feet nor less than 20 feet from a fire department connection.

Section 903.3 amended to read as follows:

903.3 Type of Water Supply. Water supply is allowed to consist of reservoirs, pressure tanks, elevated tanks, water mains or other fixed systems capable of providing the required fire flow. In setting the requirements for fire flow, the chief may be guided by Appendix III-A.

903.3.1 Man-made water sources. Man-made water sources shall have a

minimum usable water volume as determined by the adequate water supply needs in accordance with 903.3.1.2. This water source shall be equipped with an approved hydrant. The water level of the water source shall be water pumped from a well **or other sources approved by the fire chief.** The design, construction, location, water level maintenance, access, and access maintenance of man-made water sources shall be approved by **the fire chief**.

903.3.1.2 Adequate Water Supply. Adequate water supply shall be determined for purposes in initial attack and flame front control as follows:

1. **One- and two family dwellings.** The required water supply for one- and two-family dwellings having a fire area which does not exceed 3,600 square feet shall be 1,000 gallons per minute for a minimum duration of 30 minutes. The required water supply for one-and two-family dwellings having a fire area in excess of 3,600 square feet shall be 1,500 gallons per minute for a minimum duration of 30 minutes.

> **EXCEPTION:** A reduction in required flow rate of 50 percent, as approved by the **fire chief**, is allowed when the building is provided with an approved automatic sprinkler system.

2. Buildings other than one- and two-family dwellings. The water supply required for buildings other than one- and two-family dwellings shall be as approved by the **fire chief** but shall not be less than 1,500 gallons per minute for a duration of two hours.

> **EXCEPTION:** A reduction in required flow rate of up to 75 percent, as approved by the **fire chief,** is allowed when the building is provided with an approved automatic sprinkler system. The resulting water supply shall not be less than 1,500 gallons per minute.

903.3.2 Testing and Maintenance. Water sources, draft sites, hydrants and other fire protection equipment required by this code shall be subject to periodic tests as required by the fire chief. All such equipment installed under the provisions of this code shall be maintained in an operative condition at all times and shall be repaired or replaced where defective. Additions, repairs, alterations and servicing of such fire protection equipment and resources shall be in accordance with approved standards.

903.3.3 Clearance of fuel. A 30' defensible space shall be provided around water tank structures, water supply pumps and pump houses.

903.3.4 Standby power. Stationary water supply facilities dependent on electrical power to meet adequate water supply demands shall provide standby power systems in accordance with the Electrical Code to ensure than an uninterrupted water supply is maintained. The standby power source shall be

capable of providing power for a minimum of two hours.

EXCEPTION: 1. When approved by the **fire chief**, a standby power supply is not required where the primary power service to the stationary water supply facility is underground.

2. A standby power supply is not required where the stationary water supply facility serves no more than one single-family dwelling.

Section 903.4.1.2 is amended by adding the following:

903.4.1.2 Testing and maintenance. Fire hydrant systems shall be subject to such periodic tests as required by the chief. Private fire hydrants shall be tested annually in accordance with City of St. Helena standards. Test reports shall be submitted to the Fire Chief within thirty (30) days of the test date. Fire hydrant systems shall be maintained in an operative condition at all times and shall be repaired where defective. Additions, repairs, alterations and servicing shall be in accordance with approved standards.

f. SECTION 1003 – FIRE -EXTINGUISHING SYSTEMS

Section 1003.2.1 is added to read:

1003.2.1 General. An automatic fire–extinguishing system shall be installed throughout every structure built in the Woodlands and Watershed zoning district, as defined in the City Code section 27.110 and all non-residential buildings and locations as set forth in Section 1003.2.1. Installation of the system shall comply with the requirements of the latest edition of NFPA, Standards 13, 13D, and 13R, as applicable.

EXCEPTION: All new construction of accessory buildings less than 200 square feet in floor area.

Existing buildings. Existing buildings in the Woodlands and Watershed zoning district and all other non-residential buildings shall have automatic fire sprinkler systems installed under the following conditions:

4. When additions or expansions to the existing structure exceed twenty-five percent (25%) of the existing floor area.

5. When the cost of repairing damage to an existing building exceeds fifty percent (50%) of the existing building's market value as determined by the County Assessor on the last equalized assessment roll at the time of its destruction or damage.

6. When the value of the remodel exceeds twenty-five (25%) of the existing building's market value as determined by the County Assessor on the last equalized assessment roll.

Amend Section 1001.6.2 to read as follows:

1001.6.2 Fire hydrants and fire appliances. Fire hydrants and fire appliances required by this code to be installed or maintained shall not be removed, tampered with or otherwise disturbed except for the purpose of extinguishing fire, training, recharging or making necessary repairs, or when allowed by the fire department. Effective July 1, 1999, all fire department connections shall have protective lockable caps approved by the Fire Chief. All such devices shall be installed within 45 days of the annual fire inspection required by section 103.3.1.1 of this code. When a fire appliance is removed as herein allowed, it shall be replaced or reinstalled as soon as the purpose for which it was removed has been accomplished.

g. SECTION 8200 – LIQUIFIED PROPANE CONTAINERS

Section 8204.3.1 is added to read:

8204.3.1 Anchoring of tanks. Containers shall be securely anchored to resist displacement due to earthquake motion. Where necessary to prevent flotation due to possible flood waters around aboveground containers, or high water table for those underground, containers shall be securely anchored. All existing installations of liquefied propane containers shall be anchored by January 1, 2000.

h. SECTION 8509 -- ACCESS TO SWITCHBOARD AND PANELBOARDS

Section 8509.4 is added to read:

8509.4 Location of electrical disconnecting equipment. Electrical disconnecting equipment in structures served by remote or detached electrical service, shall be readily accessible to fire fighting personnel. The disconnecting equipment shall be installed on the exterior of the building and identified for fire fighting personnel.

i. SECTION 8704 – FIRE SAFETY DURING CONSTRUCTION

Section 8704.17 is amended to read:

8704.17 Fire-Protection Plan. A fire-protection plan shall be established for all developments. A fire-protection plan shall be submitted to the Fire Department for review no later than the time of building permit application. Fire protection plans shall include emergency vehicle access, location of all fire hydrants, site address, rapid entry system location, Post Indicating Valve (PIV)/Fire Department Connection (FDC), fire lanes, and other information as required by the Fire Chief.

SECTION 2. Severability. If any section, sub-section, subdivision, paragraph, clause or

SECTION 2. Severability. If any section, sub-section, subdivision, paragraph, clause or phrase in this ordinance, or any part thereof, is for any reason held to be invalid or unconstitutional, such decision shall not affect the validity of the remaining sections or portions of this ordinance or any part thereof. The City Council hereby declares that it would have passed each section, sub-section, subdivision, paragraph, sentence, clause or phrase of this ordinance, irrespective of the fact that any one or more sections, sub-sections, subdivisions, paragraphs, sentences, clauses or phrases may be declared invalid or unconstitutional.

SECTION 3. The City Council makes the following findings in support of adoption of this Ordinance:

1. This Ordinance is necessary to protect the public health, safety and welfare; and,

2. The recitals set forth in this Ordinance are true and correct and provide a further basis for this Ordinance.

Read and adopted at a Regular Meeting of the City Council held June 8, 1999, by the following vote:

AYES: Councilmembers Bowers, Potter, Savidge, Toller, Mayor Slavens

NOES: None

ABSENT: None

ABSTAIN: None

APPROVED:

Ken Slavens, Mayor

ATTEST:

Delia Guijosa, City Clerk

Introduced: May 25, 1999
Adopted: June 8, 1999
Published: June 17, 1999

SECTION 5 STORM DRAIN

5-1.01 Reinforced Concrete Pipe. All storm drain pipe shall be Class III reinforced concrete pipe (RCP), unless otherwise stated on the plans, and shall be installed in conformance with Section 65 of the State Standard Specifications, as specified herein and as directed by the Engineer.

5-1.02 Cast-In-Place Concrete Pipe. Cast-in-place concrete pipe shall not be used without the prior written permission of the City Engineer.

Installation of cast-in-place concrete pipe shall be in conformance with Section 63 of the State Standard Specification and as directed by the Engineer.

5-1.03 Plastic Pipe. Plastic pipe shall not be used without the prior written permission of the City Engineer.

The material and installation of plastic storm drain pipe shall be in conformance with Section 64 of the State Standard Specifications and as directed by the Engineer. Plastic pipe shall not be used in the travelway of roads.

5-1.04 Installation of Pipe. Pipe laying shall proceed upgrade without break from structure to structure as shown on the drawings, and each pipe length shall be checked to grade, in the trench if over 10 feet in depth or above the trench if 10 feet or less in depth. The grade line will be over 25 feet in length and shall be established before any pipe is laid in the trench.

5-1.05 Curb Inlets. Curb inlets to be installed shall be in conformance with City of St. Helena Standard Plans and the details as shown on the plans and as directed by the City Engineer.

5-1.06 Base Material. Base material under curb inlets shall be 4" of base conforming to the provisions in Section 26-1.02A of the State Standard Specifications and shall be placed and compacted in conformance with the requirements specified in said section.

5-1.07 Excavation. All excavation in installing curb inlets will be in accordance with Section 2 "Earthwork" of these specifications.

Each length of pipe shall be laid on a firm bed and have a true bearing for its length. Adjustment of pipe to line and grade shall be made by fine grading the bedding material. No wedging or blocking to support the pipe will be permitted.

When pipe laying is not in progress, the forward end of the pipe shall be kept effectively closed with an approved temporary barricade.

5-1.08 Storm Drain Manholes. Storm drain manholes shall consist of a precast unit, or a cast-in-place unit in conformance with Section 51 of the State Standard Specifications, or a combination thereof.

Manholes shall be fitted with either an eccentric cone or a flat "reducer" slab. Manholes shall be adjusted to match the finished grade with no less than two precast grade rings fitted with a cast iron frame and cover not less than 24" in diameter.

The inside diameter of the manhole shall be of such size that it accommodates the outside diameter of the largest adjoining pipe, however, in no cast shall the inside diameter of any manhole be less than 48 inches. All pipe ends shall be rounded and all joints grouted. No pipe ends shall extend into the barrel of the manhole.

When the flowline of the manhole is over seven (7) feet below the top of the cover the inside of the manhole will be no less than 60 inches in any direction.

5-1.09 Adjust City Manholes to Paving Grade. Existing City manholes located within the street right-of-way shall be adjusted to conform to finished pavement grades in accordance with City Standard Plans.

SECTION 6 SANITARY SEWER SYSTEM

6-1.01 Materials. Sewer pipe shall be ductile iron pipe, acrylonitrile-butadiene-styrene pipe or polyvinyl chloride pipe.

6-1.02 Acrylonitrile-Butadiene-Styrene (ABS) Pipe. ABS solid wall pipe shall conform to ASTM Designation D-2751, and shall have a wall thickness of not less than SDR35.

Cement used for all ABS pipe joints shall conform to paragraph 6.4 of ASTM D-2680. No primer shall be used in ABS installations. Jointing shall be accomplished by applying a coating of cement to the inside of the socket and to the outside of the spigot end of pipe to be joined in sufficient quantity that when the spigot is fully inserted into the socket, a bead of excess cement will form around the entire circumference of the outside juncture of said spigot and socket. Excess cement shall then be removed.

All pipe shall have a home mark to indicate full penetration of the spigot when the joint is made.

All ABS pipe entering or leaving a concrete structure shall have a standard manhole gasket, as supplied by the pipe manufacturer, firmly clamped around the pipe exterior and cast into the structure base or near the structure wall center as a water stop.

After the pipe installation and placement and compaction of backfill, but prior to placement of pavement, all pipe shall be cleaned and then mandrelled to measure for obstructions. Obstructions shall include, but not be limited to deflections, joint offsets, and lateral pipe intrusions. A rigid mandrel, with an effective circular cross section having a diameter of at least 95% of the specified average inside diameter shall be pulled through the pipe by hand. The minimum length of the circular portion of the mandrel shall be corrected by the Contractor. Obstructions due to deflection shall be corrected by replacement of the over-deflected pipe, not by re-rounding in place.

If a section of pipe fails to meet the mandrel test and is reinstalled and fails the second time, said section(s) of pipe shall be replaced with an approved rigid pipe material.

The manufacturer shall furnish to the City of St. Helena a 5% deflection mandrel and proving ring as shown on the standard drawings for retention and use during testing.

The average inside diameter for ABS Solid Wall Sewer Pipe shall be the "Average Outside Diameter" (see ASTM D2751) minus 2.12 times the "Minimum Wall Thickness" (see ASTM D2751).

The Contractor shall retest the solid wall pipe using a mandrel with an effective circular cross section having a diameter of at least 95% of the specified average inside diameter eleven (11) months after recordation of Notice of Completion of the contract or after the acceptance by the

directors of a subdivision. Any pipe which fails to pass the mandrel test shall be replaced at the expense of the Contractor. The City reserves the right to determine the longitudinal limits of

any pipe that is required to be replaced. Pipe replacement shall be guaranteed by the project maintenance bond.

6-1.03 Polyvinyl Chloride (PVC) Pipe. PVC solid wall sewer pipe and fittings for gravity sewers shall be made for all new, rigid, unplasticized polyvinyl chloride in accordance with ASTM Standard Specifications D3034 and F-679 and shall have a wall thickness of at least SDR 35. Joints shall consist of an integral thickened bell-and-rubber ring and shall conform to ASTM D3212. Gaskets shall conform to ASTM E477. Joints shall be assembled using only manufacturer's recommended lubricant.

All pipe shall have a home mark to indicate full penetration of the spigot when the joint is made.

All PVC pipe entering or leaving a concrete structure shall have a standard manhole gasket, as supplied by the pipe manufacturer, firmly clamped around the pipe exterior and cast into the structure base or near the structure wall center as a water stop.

After pipe installation and placement and compaction of backfill, but prior to placement of pavement, all pipe shall be cleaned and then mandrelled to measure for obstructions. Obstructions shall include, but not be limited to deflections, joint offsets and lateral pipe intrusions. A rigid mandrel, with an effective circular cross section having a diameter of at least 95% of the specified base inside diameter shall be pulled through the pipe by hand. The minimum length of the circular portion of the mandrel shall be equal to the nominal diameter of the pipe. All obstructions encountered by the mandrel shall be corrected by the Contractor. Obstructions due to deflection shall be corrected by replacement of the over-deflected pipe, not by re-rounding in place.

If a section of pipe fails to meet the mandrel test and is reinstalled and fails the second time, said section(s) of pipe shall be replaced with an approved rigid pipe material.

The manufacturer shall furnish to the City of St. Helena a 5% deflection mandrel and proving ring as shown on the standard drawings for the City's retention and use during testing.

The average inside diameter for PVC Solid Wall Sewer Pipe shall be the "Average Outside Diameter" (see ASTM D3034 and F679) minus 2.12 times the "Minimum Wall Thickness" (see ASTM D3034 and F619).

The Contractor shall retest the solid wall pipe using a mandrel with an effective circular cross section having a diameter of at least 95% of the specified average inside diameter eleven (11) months after recordation of Notice of Completion of a sewer contract or after the acceptance by the directors of a subdivision. Any pipe which fails to pass the mandrel test shall be replaced at the expense of the Contractor. The City reserves the right to determine the longitudinal limits

of any pipe that is required to be replaced. Pipe replacement shall be guaranteed by the project maintenance bond.

6-1.04 Ductile Iron Pipe (DIP). Ductile iron pipe shall be cement lined, new pipe conforming to ANSI. A 21.51-1976 or most recent issue, if any, as sponsored by the American Water Works Association for thickness class 50 Ductile Iron Pipe. The pipe shall be furnished with either bell and spigot ends, "Tyton Joints", or mechanical joints except where specifically specified on the plans.

All ductile iron pipe buried underground shall be encased in polyethylene film in the tube form. Polyethylene material and installation procedure for the encasement shall conform to ANSI/AWWA C105/A21.5-82 or most recent issue, if any. Installation Method "A" as described in aforementioned specification shall apply.

Couplings for connection to the sewer main shall be of a type approved by the City Engineer.

6-1.05 Excavation and Backfill. Excavation and backfill shall be as shown on Standard 401, "Standard Trench Detail" of the standard drawings.

All stumps and large roots encountered during trenching operations shall be removed to the satisfaction of the City Inspector. The trench shall be opened sufficiently ahead of the pipe laying operations to reveal obstructions. Trench crossings shall be provided as necessary to accommodate public travel and to provide convenient access to adjacent properties. Flow shall be maintained in any sanitary sewers, storm drains, water lines, or water courses encountered in trenching.

All cutting, handling and disposal of asbestos cement pipe shall be done in accordance with the Contractor's State Licensing Law and all applicable laws and regulations.

6-1.06 Existing Manholes. Existing manholes and cleanouts located within the street right-of-way shall be adjusted to conform to finished pavement grades in accordance with the details shown on the plans.

Prior to the removal of an existing manhole frame, a platform shall be constructed in the manhole above the top of the sewer to prevent any dirt or debris from falling into the sewer. The platform shall remain in place until all work on the manhole has been completed and the

asphalt concrete has been placed around the manhole. Prior to the removal of the platform from the manhole, all dirt and debris shall be removed.

Lowering of the manhole ring and cover shall be accomplished by the removal of existing concrete grade rings below the manhole ring or by removing the upper section of manhole barrel and substituting therefore a shorter section of barrel.

At the Contractor's option, in lieu of removing and replacing barrel sections as above provided, the top of the existing upper barrel section may be trimmed and the taper section replaced on such trimmed surface provided, however, that such trimming shall not crack or otherwise damage the remaining portion of barrel section.

In the event that the portion of barrel section to remain is cracked or damaged, or otherwise made unsuitable for use by such trimming, the entire section shall be removed and replaced with a new section of barrel. Trimming of taper sections will not be permitted.

All sections of the manhole shall be set in cement mortar or in approved gasket material. Trim excess gasket material and plaster inside joints smoothly. Manhole sections set in cement mortar shall be smoothly plastered inside and out.

After placing the surface course of asphalt concrete, all manholes and cleanouts shall be located and marked with white paint before the close of that work day.

Within two working days of paving, all manholes and cleanouts shall be adjusted to grade and inspected.

6-1.07 Pipe Laying. Where ground water occurs, pumping shall continue until backfilling has progressed to a sufficient height to prevent flotation of the pipe. Water shall be disposed of in such a manner as to cause no property damage or not be a hazard to public health or the environment.

Where projects consist of construction or new mains or extensions of existing mains, contractors must make provisions to keep flow from entering the sewer collection system. This shall include the installation of a positive sealing plug on the outlet of the new mains closest manhole to the existing main. Additionally, if any new laterals enter the new main between the existing main and the closest manhole on the new main, each lateral shall be individually plugged with a positive sealing plug. The Contractor shall be held responsible to periodically check that all plugs are holding tight. The Contractor shall ensure that the water contained in the new main is not contaminated with human or hazardous waste, prior to removal of any plugs. The Contractor shall make provisions to dewater the new mains without disposal into the sewer collection system and without cause of property damage or hazard to the public health or environment. Failure to comply may result in penalties.

Where construction consists of constructing a new main or extension of an existing main, the downstream end of the new main shall be securely closed with a tight fitting plug until the construction is accepted by the City.

If the new sewer main is connecting to an existing main at a location other than an existing manhole, the Contractor shall pothole the existing sewer main to verify invert grades and locations.

Sewer pipe shall be installed on the alignment and grade as shown on the plans and in accordance with the Standard Specifications, or as directed by the City Engineer. Existing sewer laterals shall be removed and replaced at the locations shown on the plans, or as directed by the City Engineer.

Sewer pipe shall be laid in straight lines and on uniform rates or grade between points where changes in alignment or grade shall be free of foreign matter before lowering into the trench.

The pipe manufacturer's written instructions covering the installation of his pipe shall be closely followed unless otherwise directed by the City or these Special Provisions. The trench shall not be backfilled until authorized by the City Inspector. Pipe laying shall proceed upgrade with the spigots pointing in direction of flow.

Electro-optical grade setting devices must be used and shall be operated by a person proficient in its operation.

Any section of pipe found to be defective or which has had grade or joints disturbed shall be re-laid by the Contractor at his expense.

Proper implements, tools and facilities satisfactory to the City shall be provided and used by the Contractor for the safe and efficient execution of the work. All pipe, fittings and accessories shall be carefully lowered into the trench by means of derrick, straps or other suitable equipment in such a manner as to prevent damage to pipe and fittings. Under no circumstances shall pipe or accessories be dropped or dumped into the trench. The pipe and accessories shall be inspected for visible defects prior to lowering into trench. Any visibly defective or unsound pipe shall be replaced.

The line and grade of existing utilities shall not be altered. Any leakage caused in existing utilities by reason of the Contractor's operations shall be immediately repaired at the Contractor's expense.

Existing storm drains shall be supported or removed and replaced at the Contractor's option. In any case, the Contractor shall be responsible for maintaining the existing line and grade of the storm drains.

Existing water lines shall be supported in place with service maintained during construction. The Contractor shall be responsible for any damage resulting from improper backfilling.

Existing sewer lines shall be supported in place with service maintained during construction. The Contractor may, at his option, remove and replace any sewer laterals which are not in use during construction. The Contractor shall be responsible for damage to sewer lines during construction and any damage resulting from improper backfilling.

Sewer lateral inverts shall be set above the mid-point of the water main.

6-1.08 Sewer Structures. Manholes shall be standard precast concrete manholes as detailed on STD DWG 201 and STD DWG 202. Mains larger than 18" in diameter or deeper than eight feet require 60" diameter manholes. Such pre-cast bases shall be placed on a minimum 12-inch thick cushion of drain rock. The drain rock shall extend a minimum of 6-inches beyond the outside edges of the base.

With the approval of the City Engineer, manhole bases may be poured-in-place concrete on undisturbed earth. The bases shall be poured full thickness against the side of the manhole excavation or to dimensions shown on the plans. The manhole excavation site shall be dewatered before pouring.

Concrete for manhole bases shall be Class A portland cement concrete conforming to the applicable requirements. The portland cement shall be Type V conforming to ASTM designation: C 150 or low alkali Type II cement meeting the requirements for Type V cement.

Where steel reinforcement is required in manhole base construction, such reinforcement shall be furnished and placed as shown on the plans and in accordance with the applicable provisions.

When using poured-in-place manhole bases, the base slab and initial riser section shall be connected with integrally poured concrete to create a watertight joint. Flow channels shall be constructed as shown on the plans. Changes in size or grade shall be made gradually and changes in direction by smooth curves. All finished surfaces shall be smoothly troweled with a steel trowel. All manhole barrels and taper section shall be precast concrete sections using Type V portland cement complying with ASTM designation: C 150 or low-alkali Type II cement meeting the requirements for Type V cement.

The 48-inch and 60-inch diameter barrels and taper sections shall be constructed in accordance with the applicable provisions of ASTM designation; C 478 and shall be inspected by the City to determine that the interior surfaces are smooth and free of pockets or depressions.

Manhole frames and covers shall be in accordance with STD DWG-211.

At locations where sewer is to be installed into or out of existing manholes, the manhole wall and base shall be chipped to accept the new size of pipe and to form a flow channel in the manhole base. The Contractor shall dry pack around the pipe between the pipe and the chipped out opening. The Contractor shall also backfill the area around the pipe with concrete to insure a watertight connection.

Mainline cleanouts shall be installed per STD DWG 205 or 206 at the locations shown on the plans.

All joints in manholes shall be sealed by means of a preformed self-bonding, self-sealing plastic gasket, such as "Ram-Nek", manufactured by the K.T. Snyder Company, Houston, Texas, or

approved equal. Joint seals shall be installed in full compliance with the manufacturer's current recommendations.

After placing the surface course of asphalt concrete, all manholes and cleanouts shall be located and marked with white paint before the close of that work day.

Within two working days of paving, all manholes and cleanouts shall be adjusted to grade and inspected.

6-1.09 Testing of Sewers. Testing of all portions of the sewer including manholes will be required. All tests shall be completed and approved prior to placing of permanent resurfacing.

For either exfiltration or infiltration test, the maximum leakage shall not exceed 250 gallons per inch of pipe diameter per mile per 24 hours as measured over a period of 30 minutes minimum. Should the leakage exceed the maximum allowable rate, the Contractor shall repair, overhaul, or rebuild the defective portion of the sewer line to the satisfaction of the City at no additional cost to the City. After repairs have been completed by the Contractor, the line shall be retested as specified above, all at no cost to the City.

The test shall be performed after the line has been laid and all backfill placed and compacted as specified elsewhere in these specifications. The Contractor, at his option, may test the line at any time during construction. However, the final test for acceptance shall be made only after all backfill is in place and compacted.

In the event that the exfiltration test prescribed above is impractical due to wet trench conditions, these portions of the sewer line where such conditions are encountered will be tested for infiltration. The City Engineer shall determine whether the exfiltration or infiltration test will be used.

Even though the test for leakage is within the prescribed limits, the Contractor shall repair any obvious leaks.

Low pressure air testing may be used in lieu of water testing at the option of the Contractor. Water testing may be required by the City Engineer. The following procedure shall be used for air testing.

1. Clean pipe to be tested by propelling a snug fitting inflated rubber ball through the pipe with water. Remove any debris.

2. Plug all pipe outlets with suitable test plugs. Brace each plug securely.

3. If the pipe to be tested is submerged in ground water, Inspector may require that gauge pressures be increased to compensate for groundwater hydrostatic pressure.

4. Add air slowly to the portion of the pipe installation under test until the internal pressure is raised to 4.0 p.s.i.g.

5. Check exposed pipe and plugs for abnormal leakage by coating with a soap solution. If any leakage is observed, bleed off air and make necessary repairs.

6. After an internal pressure of 4.0 p.s.i.g. is obtained, allow at least two minutes for air temperature to stabilize, adding only the amount of air required to maintain pressure.

7. After the two minute period, disconnect the air supply.

8. When pressure decreases to 3.5 p.s.i.g., start stop watch. Determine the time in seconds that is required for the internal air pressure to reach 2.5 p.s.i.g. The minimum allowable time in seconds shall be based on the diameters and lengths of pipe under test. The Contractor will be allowed to manually bleed air as required to drop to internal pressure to 3.5 p.s.i.g. to start test, of desired.

Air test data sheets and nomograph with directions for computing the specifications time are available at the City Engineer's office.

The Contractor shall hire an independent television inspection service to perform a closed-circuit television inspection of all newly constructed sewers. A video tape of the television inspection shall be produced and delivered to the City in color VHS format, together with a typed log of their inspection.

The following conditions shall exist prior to the television inspection:

a. All sewer lines shall be installed, backfilled and compacted;
b. All structures shall be in place, all channeling complete and all pipelines accessible from structures;
c. All other underground facilities, utility piping and conduit within two feet of the sewer main, shall be installed;
d. All compaction required shall be completed;
e. Pipelines to be inspected shall be balled, flushed and mandrel tested;
f. The final air or water test shall have been completed;
g. Immediately before the television inspection, run fresh water into the sewer until it passes through the downstream manhole. During the test water shall not be allowed to flow through sewer system.

When the above work has been completed, the Contractor shall notify the City 48 hours in advance of the date for television inspection. During this inspection, the Contractor or his authorized representative shall be present to observe the video pictures as provided by the television camera (i.e. while camera is being pulled through system).

When required by the City Engineer, sewer laterals shall be inspected by closed circuit television. Also, when required, existing systems at connection points of new system shall be inspected by closed circuit television. The Contractor shall be responsible for all associated costs.

The following video tape observations shall be considered defects in the construction of the sewer pipelines and will require corrections prior to acceptance:

a. Off grade - 0.05 for 6" mains
   0.08 for 8" and larger mains, or over
b. Joint separations - over 1/2" - deviation from grade
c. Offset joints or pipe out of round
d. Chips in pipe ends - non more than ¼" deep
e. Cracked or damaged pipe or evidence of the presence of an external object bearing upon the pipe (rocks, root, etc.)
f. Infiltration
g. Debris or other foreign objects
h. Other obvious deficiencies when compared to approved plans and specifications, these Standards and Standard Drawings.
i. Low spots - 1/2" maximum depth

The Contractor shall be notified in writing of any deficiencies revealed by the television inspection that will require repair, following which the Contractor shall excavate and make the necessary repairs and request a television reinspection. Television reinspection shall be at the Contractor's expense.

6-1.10 Trench Resurfacing. Trench resurfacing shall be as shown on STD DWG 401, "Standard Trench Detail".

6-1.11 Mandrel Test. The maximum allowable vertical deflection for sewer lines is 5% of the pipes average inside diameter. Vertical deflection shall be measured by means of a rigid "Go/No Go" gauge (Mandrel). The Contractor shall be responsible for supplying the Mandrel to be used and it must be acceptable and approved by the City prior to conducting the tests.

Prior to testing, the sewer line shall be free of debris that might cause the gauge to jam. It is recommended that the Contractor clean the line with a hydro-cleaner prior to insertion of the "Go/No Go" gauge.

The procedure for testing shall be in accordance with City of St. Helena Standards.

6-2 SANITARY SEWER LATERALS

6-2.01 Permits. No building sewer or lateral sewer shall be installed, altered or repaired nor any connection made thereto, until a permit for the work has been obtained from the City and the necessary fees paid.

Sewer permits can be issued prior to main line construction but trenches and laterals cannot be constructed or inspected until all main line constructions are completed, tested and approved by the City Inspector and accepted by the City.

6-2.02 Pipe Size. Service sewers shall be sized in accordance with the latest edition of the Uniform Plumbing Code, but in no case smaller than four (4) inches.

6-2.03 Grades and Alignment. Service sewers shall be run in practical alignment at a uniform slope of not less than ¼" per foot toward the main sewer; provided that where it is impractical due to the depth of the main sewer or to the structural features or the arrangement of any building or structure, to obtain a slope of ¼" per foot, any such piping may have a slope of not less than 1/8" per foot when approved by the City Engineer.

6-2.04 Backflow Device. A backwater check valve shall be installed in the building sewer line at a location approved by the City Engineer whenever the building has a finished floor elevation twelve (12) inches or less above the top elevation of the nearest upstream manhole or cleanout. Backwater check valves shall be cast iron or cast bronze. Backwater check valves shall be approved by City Engineer prior to installation.

6-2.05 Independent Systems. Each building shall have an independent connection to a main sewer except that where the City Engineer determines that it will not be detrimental to the interest of the applicant or the City. Multiple structures may be connected to the same building sewer when located on the same parcel.

The applicant for multiple connections to the same building sewer shall provide a plan to scale (preparation by Civil Engineer is recommended but not required) showing:

a. The location of all physical features such as buildings, trees, creeks, paved areas, building drain outlets, etc.

b. Existing and proposed sewers, including size, alignment, lengths, grades, elevations, cleanouts, etc.

c. Ground elevations at critical points sufficient to determine that the system is workable and will serve all buildings, using adequate grade and cover. All elevations shall be on National Geodetic Vertical Datum (NGVD).

d. Calculations verifying adequacy of piping size for proposed fixture unit loading. See Uniform Plumbing Code for criteria.

6-2.06 Cleanouts. Cleanouts of the same size as the line they are intended to serve shall be provided as follows:

a. At the point of connection to the building drain.

b. At any single turn greater than forty-five (45) degrees.

c. At intervals along the building sewer when the cumulative total of deflections from the point of connection to the main or from another cleanout exceeds forty-five (45) degrees.

d. At intervals not to exceed one hundred (100) feet along the building sewer.

Cleanouts shall be extended to grade and protected by "Christy" F-8 curb valve boxes, or equal, except that in areas subjected to traffic or where located in traffic areas or sidewalks, "Christy" G-5 traffic valve boxes, or equal, with cast iron lids shall be used. These cleanouts located in traffic areas shall have a 12-inch deep concrete collar poured around the valve box with a minimum outside diameter of at least 20 inches greater than the OD of the top of the box.

6-2.07 Fittings. All bends, where permitted shall be made with long radius fittings.

6-2.08 Proximity to Wells. Building sewers shall not be located closer than 50 feet from an individual domestic well. However, said clearance can be reduced to 25 feet if the building sewer is constructed of ductile or cast iron. Where special hazards are involved, the distance required shall be increased, as may be directed by the Napa County Health Officer. Also, see Bulletin #74 "Water Well Standards", State of California, the Resource Agency Division of Water Resources for additional requirements.

6-2.09 Connecting Existing Buildings. Where an existing building is disconnected from a septic tank and reconnected to a new service sewer, the connection to the new sewer shall be made at the end of the building drain. No portion of the existing piping from the building drain to the septic tank shall be utilized for connecting to the new service sewer unless said piping is exposed and tested to permit the City to determine that it meets all of the requirements for new construction. Waste from the abandoned septic system shall not be allowed to enter the sewer system. Tanks must be pumped out by licensed septic tank waste disposal contractor prior to abandonment of same. The tank shall then be removed or filled with a low strength control density fill material (CDF).

6-2.10 Connection to Existing Sewers. When a contractor makes application to connect to an existing building sewer, and it the City has reason to believe that the sewer is deficient in any

respect, the City Engineer may require the contractor to excavate and/or test the sewer and to repair or replace it if necessary to make sure that it complies with these sewer standards.

6-2.11 Material. Lateral sewer piping and construction shall conform to STD DWG 142 and the requirements contained herein.

Building sewer piping shall be a minimum 4-inch diameter and shall be one of the following:

-Ductile Iron Pipe, ANSI A21.51
-Acrylonitrile-Butadiene-Styrene (ABS Pipe SDR 35)
-Polyvinyl-Chloride (PVC Pipe SDR35) when used with a manufactured "Y" specifically designed for PVC laterals.

The pipe manufacturer's written instructions shall be closely followed in all piping installations.

Any gas, water or electric services or other pipes paralleling a sewer pipe shall be separated from said sewer pipe by a minimum horizontal clear distance of eighteen (18) inches. Such pipes placed in the same trench as a sewer pipe, if above the elevation of said sewer pipe, shall be placed on a solid shelf excavated at one side of the common trench. The bottom of any water service pipe placed in the same trench as a sewer pipe shall be at least twelve (12) inches above the top of said pipe, and as such will require prior approval by the City Engineer.

6-2.12 Pipe Cover and Clearance. **Lateral sewers** - shall be installed at sufficient depth to serve the parcel involved, but in no case less than three (3) feet clear cover at the property line unless specifically authorized by the City Engineer.

Building sewers - shall have a clear cover of eighteen (18) inches minimum from finished grade. Where clear cover is less than eighteen (18) inches, cast iron pipe shall be used. Where building sewers are located or cross driveways of the property, ductile iron pipe shall be used.

In extreme cases such as in rocky terrain or very steep slopes, building sewers may be installed above-ground. Special approval from the City Engineer will be required. In such cases cast iron pipe shall be used along with special supports, anchors, etc. as required by the City Engineer. In such cases the Contractor or Developer's Engineer shall prepare a drawing to scale showing the proposed construction and special details for the City Engineer's approval prior to commencing work.

SECTION 7 WATER SYSTEM

7-1.01 Description. All water distribution facilities installed within public streets or easements shall be constructed in accordance with the following Special Provisions and Standard Drawings:

7-1.02 Materials. The Contractor shall furnish all materials required to complete the work.

The Contractor shall furnish the Engineer a list of his sources of materials with type, manufacturer, and model number of materials. The list shall be furnished to the Engineer in sufficient time to permit proper inspecting and testing of materials to be furnished from such listed sources in advance of their use. The Contractor shall furnish, without charge, such samples as may be required. Inspection and tests, if deemed necessary, will be made by the Engineer or his designated representative. It shall be understood that such inspections and tests, if made at any point other than the point of incorporation in the work, in no way shall be considered as a guarantee of acceptance of such material nor of continued acceptance of material presumed to be similar to that upon which inspections and tests have been made.

Manufacturer's warranties, guarantees, instruction sheets and parts lists which are furnished with articles or materials incorporated in the work, shall be delivered to the Engineer before final acceptance.

Pipe, hydrants, valves, fittings and miscellaneous materials are described herein:

a. Ductile Iron Pipe (DIP) shall be cement lined, new pipe conforming to ANSI A 21.51 1976 or most recent issue, if any, as sponsored by the American Water Works Association for thickness Class 50 Ductile Iron Pipe. The pipe shall be furnished with either bell and spigot end, "Tyton Joints" or mechanical joints except where otherwise specified on the plans. Ductile Iron Pipe to be wrapped with 8-Mil Polyethylene sleeve, with 2 ft. overlap. Secure overlaps and folds with adhesive tape per manufacturer's recommendations.

b. Polyvinyl Chloride (PVC) Pipe shall be new, minimum Class 150 or as shown on the plans, and shall conform to the requirements of ANSI/AWWA Standard C900 and shall be furnished with cast iron pipe equivalent O.D.

   PVC pipe shall be furnished with either bell ends or couplings designed to effect an elastomeric pressure seal.

   Laying length shall be 18 or 20 feet except where shorter lengths are required to fit curves and closures.

   Each and every length of pipe and coupling shall be marked with the manufacturer's name, lot number, pressure class, and the date the pipe was tested by a State certified materials testing laboratory.

Each and every length of pipe and coupling shall be marked with the manufacturer's name, lot number, pressure class, and the date the pipe was tested by a State certified materials testing laboratory.

The testing shall be performed in a State licensed materials testing laboratory where the testing standards meet or exceed State of California testing standards.

Accompanying or preceding each load of pipe delivered, a certificate shall be furnished to the City certifying that the pipe which is (to be) delivered has been tested and meets the requirements of the American Water Works Association Standard Specifications.

No. 12 copper wire shall be laid on top of and taped to pipe with duct tape at approximately 10 ft. intervals along entire length of all non-metallic service laterals and mains, and shall be extended to the surface at all valve locations, blow-offs, air release and vacuum valves and meter boxes sufficiently for locator equipment to be attached.

Closure Joints shall be accomplished by field cutting and dressing the plain end of the pipe.

Retainer Glands, when used, shall use the angle set screw type. The screw shall be of high strength, low alloy steel, 19,000 psi tensile strength and corrosion resistant.

Restrained Joints may be required by the Engineer under certain conditions of stress.

c. Fittings shall be new gray iron or ductile iron fittings conforming to ANSI/AWWA Standard C110/A21.10 of latest revision, and shall have the proper type of ends to match the type of pipe used. Foreign manufactured fittings are not allowed under any circumstances.

Gray iron fittings shall be coated inside and outside with a petroleum asphaltic coating conforming to AWWA Standard C110 and shall meet or exceed the pressure rating of the pipe to be installed.

Ductile iron fittings shall be cement mortar lined in accordance with AWWA Standard C104 of latest revision, and shall have a petroleum asphaltic coating conforming to AWWA Standard C110. Ductile iron fittings shall have a minimum pressure rating of 250 psi and shall otherwise meet or exceed the pressure rating of the pipe to be installed and shall have a minimum Class 53 thickness rating.

Full compensation for furnishing and installing fittings shall be considered as included in the prices paid for the various contract items of work, and no additional allowance will be made therefor.

d. Gate Valves shall conform to AWWA Standard C509 of latest revision and shall be the resilient-seat type with non-rising stem, opening counter-clockwise with 0-ring stem seal and suitable ends for connection to the type of pipe or fitting used. The working pressure rating of gate valves shall meet or exceed the pressure rating of the pipe specified on the Plans.

e. Butterfly Valves, rubber seated, shall be manufactured in accordance with AWWA Standard C504 or latest revision and shall be of the rubber seal type. They shall be manufactured by B.I.F., Clow Corporation, Dresser Manufacturing, Henry Pratt Company, American-Darling Valves Company, Kennedy Valve Manufacturing Company, or Mueller Company and no substitutes will be accepted. All valves shall be short body, Class 150, with direct bury type operators. The operators shall conform to AWWA Standard C504, Section 11, Manual Operators, and shall be designed to hold the valves in an intermediate position between fully open and fully closed without creeping or fluttering. Each operating mechanism shall be removable for inspection and repair.

Manual valve operators shall be of the worm gear or traveling nut type and fully enclosed. Adjustable stops shall be provided to stop valves in the fully opened and the fully closed position. An arrow and either the word "open" or "closed" shall be cast on the 2-inch wrench nuts, to conform with AWWA Standard C500, Section 19, to indicate the direction to turn. Valves shall open with a counter-clockwise rotation of the operating nut.

Operator components shall, at the extreme operator position, withstand without damage an input torque 300 ft. lbs. for operating nuts.

The minimum number or rotations of operating wheels or nuts to open butterfly valves and laying lengths of butterfly valves shall be as follows:

Diameter of Valve Inches	Minimum Number of Turns to Open	Laying Length Inches*
4	12	5
6	18	6
8	24	6
10	30	8
12	36	8
14	40	8
16	48	8
18	54	8
20	60	8
24	66	8
30	72	12
36	78	12

*Includes rubber if rubber extends over flange face. Tolerance for valves 10 inches and smaller: ± 1/6 inch. Tolerance for valves 12 inches and larger: ± 1/8 inch.

The Contractor shall submit for approval complete shop drawings of all butterfly valves and operators to be furnished. All drawings shall be submitted in triplicate to the Engineer for approval prior to manufacturing and shipment.

f. Air and Vacuum Valves. Air release and combination valves shall be installed at locations specified by the Engineer and shall conform to City Standard 128. Valves shall be designed for 150 psi working pressure.

Air release valves shall be capable of positive action in releasing air entrained in water under pressure. The valve body and cover shall be cast iron, trim shall be bronze and float shall be stainless steel. Cast iron parts shall be coated to retard corrosion. Air release valves shall be Crispin Type N.

Combination air valves shall consist of an air and vacuum valve with an air release valve connected to its chamber. The valve shall be capable of (1) venting large quantities of air when not under water pressure, (2) permitting the entry of air to prevent a vacuum, and (3) positive action in releasing air entrained in water under pressure. The valve body and cover shall be cast iron, trim shall be bronze and float shall be stainless steel. Cast iron parts shall be coated to retard corrosion.

Combination air and vacuum valves shall be Crispin Type RN.

g. Blow-Off Assembly shall conform to City Standard 120 and shall include brass nipples and fittings, valve and valve box with cover in accordance with the City requirements.

h. Fire Hydrants shall conform to City Standard 101 and to AWWA Standard C503 and shall be Commercial style by Jones J3760 or approved equal. All hydrants shall have two (2) 2-1/2-inch and one (1) 4-1/2-inch outlets, with standard pentagon operating nut, opening left, with a maximum 60 ft. lb. operating torque at the operating nut, and with all drain outlets plugged. All hydrants shall be 6-inch mechanical or tyton jet inlet.

i. Coating Exposed Surfaces. All buried fittings, fire hydrants and exposed nuts and bolts shall receive two (2) coats of Koppers Bitumastic No. 505, or approved equal, following manufacturer's recommendation on preparation of surface and application.

j. Retainer Glands. Retainer glands shall be used on all mechanical joint fittings and shall be suitable for use with PVC C-900 pipe.

k. Flanged Adapters shall be Rockwell International, Baker Series, or Columbus Standards, Inc., Ductile Iron, with high strength, low alloy steel nuts and bolts, flanged coupling adapters with low alloy steel anchor studs, or equal approved by the Engineer.

l. Gaskets. All flanged gaskets shall be full-face and of asbestos composition manufacture.

m. Transition and Flexible Couplings shall have cast iron or steel sleeves the same as pipe type furnished; ductile iron flanges, stainless steel or bronze bolts and nuts; and wedge-type rubber gaskets. The couplings shall be designed for 150 psi working pressure except as noted and each shall be sized to properly fit the ends of the two pieces of pipe being joined. The couplings shall be Rockwell International Type 441, or equal approved by the Engineer.

n. Miscellaneous Appurtenances, including check valves, service materials, saddles, regulator valves, insulators, pumps, pressure tanks, valve boxes, and miscellaneous hardware, shall be per City Standards and/or of the type shown on the Plans and of a quality acceptable to the Engineer. Upon request of the Engineer, the Contractor shall deliver samples of any such miscellaneous appurtenances to the Engineer for examination and testing and, if rejected by the Engineer, all similar appurtenances shall be removed from the job site and not again utilized in the work.

o. Miscellaneous iron and steel shall conform to the provisions in Sections 55 and 75 of the State Specifications. All ferrous nuts, bolts, and washers shall be stainless steel or either galvanized or cadmium coated.

p. Reinforcement shall conform to the provisions in Section 52, State Specifications.

q. Concrete shall conform to the provisions in Sections 51 and 90, State Specifications. Thrust blocks shall be constructed of Class C concrete as a minimum.

r. Polyethylene Wrap for ductile iron pipe and fittings shall be 8 mills thick black tube and shall be furnished with tape for wrapping pipe. Polyethylene materials shall be in accordance with the pipe manufacturer's recommendations and shall be supplied by the pipe manufacturer.

s. Copper Service Tubing shall be in conformance with the latest AWWA Standards as described in ANSI/AWWA Standard C800 of the latest revision, and with ASTM B88, and shall be Type "K" soft temper for 1-inch tubing and Type "K" hard temper for 2-inch tubing.

Full compensation for copper water service tubing shall be considered as included in the prices paid for each water service, and no additional allowance will be made therefor.

t. Harness block, anchor blocks, thrust blocks and/or restrained joints shall be provided for all tee elbow, cross, dead-end and blow-off installations required for water pipe construction per applicable City Standard Plans.

Full compensation for furnishing all labor, materials, tools, equipment and doing all the work involved, including details and calculations when required, for thrust blocking and/or restrained joints shall be included in the various items of work, and no additional allowance will be made therefor.

The acceptance of any material shall not be a bar to subsequent rejection if found defective by the City Engineer.

7-1.03 Trench Excavation, Backfill and Resurfacing. Excavation, backfill and resurfacing shall conform to the provisions in Section 19-3, State Specifications. Backfill around water lines protected with polyethylene wrap shall be in accordance with the manufacturer's recommendations and shall be fine sand material placed to a minimum of 12 inches above top of pipe. All backfill material shall be approved by the Engineer.

Pipe bedding from the bottom of the trench to the bottom of the pipe shall be compacted by hand tamping to a minimum of 95% relative compaction. Bedding from the bottom of the pipe to 12" above the top of the pipe shall be compacted by hand tamping to a minimum of 90% relative compaction. All backfilling shall conform to City Standard 401.

Where Flowable Fill (CDF) is required, Contractor will submit mix design for approval by Engineer.

All raised pavement markers, street striping, chatter bars or any other traffic markings disturbed during this contract work shall be replaced in kind by the Contractor to the satisfaction of the Engineer.

Full compensation for excavation and furnishing and placing backfill and asphalt surfacing, and replacement of pavement markers, street striping or any other traffic markings shall be considered as included in the prices paid for the various contract items of work, and no additional allowance will be made therefor.

7-1.04 Pipe Laying. Each section of pipe shall be carefully inspected for damage that may have occurred in transit. Any damaged or rejected pipe shall be marked appropriately and removed from project area.

Arcing or curving of pipe is allowed and shall be accomplished per pipe manufacturer's recommendations.

Each section of pipe shall be lowered into the trench by means of slings of a type approved by the Engineer, and the pipe main assembled piece by piece. Bells usually face the direction in which the work is progressing. Care shall be taken to provide for uniform support of the pipe in the bottom of the trench. Care should be exercised to avoid injury to the coating or lining. If damage occurs, repairs must be made before the damaged pipe will be acceptable. Where

necessary to properly locate valves and fittings, the pipe shall be neatly and squarely cut to length by approved methods.

If pipe is to be stored for future use, proper storage procedures as recommended by the manufacturer shall be followed and shall include all pipe lubricant, gaskets and appurtenances.

Each section of pipe and each fitting shall be thoroughly cleaned out before it is lowered into the trench. Cleaning of each pipe or fitting shall be accomplished by swabbing out, brushing out, blowing out with compressed air, washing out with water, or by any combination of these methods necessary to remove all foreign matter. The most efficient method of cleaning out pipe and fittings will be determined on the job by the Engineer.

If clean pipe sections and fittings cannot be placed in the trench without getting dirt into the open ends, the Engineer may require that a piece of tightly woven canvas be tied over the ends of the pipe or fitting until it has been lowered into position in the trench. After the pipe or fitting has been lowered into the trench, all foreign matter shall be completely brushed from the bell and spigot ends before assembly.

No pipe or fitting shall be lowered into a trench containing water. The trench bottom shall be free from pieces of rock or other material that would tend to damage the pipe. Water shall be pumped from wet trenches and the trenches shall be kept dry until the joints have been completed and the open ends of the main have been closed with water-tight plugs or bulkheads. Whenever pipe laying is discontinued on any job for short periods, or whenever work is stopped at the end of the day, the open ends of the main shall be closed with approved water-tight plugs or bulkheads. The plug or bulkhead shall not be removed unless the trench is dry. Every effort shall be made to keep the trench dry at all times.

Fittings shall be set in place to accurate line and grade and centered. All horizontal bends consisting of elbows 11-1/4 degrees or more shall be anchored in concrete as shown on the drawings, unless otherwise directed by the Engineer. Collars and rods shall be used on all plugs and at other locations if indicated on the drawings, or as directed by the Engineer, to restrain joints under certain conditions of stress.

Mechanical or push-on joint fittings can be used with mechanical or push-on joint pipe. The plain end of the pipe usually is provided with 1 or 2 painted gauge lines which show whether it has been properly positioned in the bell socket after assembly. The pipe manufacturer's instructions as to the location of these lines should be followed.

When installing mechanical joint pipe, the assembly of the joint requires use of a torque wrench for the proper amount of pressure.

SUGGESTED TORQUE

Bolt Size	Ft. Lbs.
5/8 inch	45- 60
3/4 inch	75- 90
1 inch	85-100
1-1/4 inch	105-120

All mechanical joint follower flanges shall be retainer gland type suitable for use with the type of pipe used, PVC C-900 pipe or Class 50 Ductile Iron pipe.

From time to time pit cast pipe will be found in the existing water system. Pit cast pipe was manufactured in four classifications, each having a different outside diameter than modern ductile or cast iron pipe. Before making extensions, existing pipe shall be measured to determine if special transition fittings are required.

Flanged joints at fittings or valves, where required by the Engineer, shall be neatly fitted, made with approved gaskets and shall be water-tight. All bolts, nuts, and gaskets shall be sized to conform to size of flange and class of pressure required.

7-1.05 Hot Tap Existing Main. The Contractor shall expose the existing main and verify the size and type of pipe. All coatings, in the area of the connection, shall be removed and the pipe shall be brushed clean. The Contractor shall furnish and install weld-on nozzle and tapping valve of the size shown on the plans. After the nozzle has been installed, and before tapping, the pipe and nozzle shall be coated with a like wrap per applicable AWWA Standards and coating manufacturer's recommendations. The nozzle shall be leakage tested with air prior to tapping, then the inside of the nozzle and tapping valve shall be swabbed with an approved chlorine solution. After tapping, the coupon cut from the pipe shall be removed and presented to the Engineer.

7-1.06 Trench Shoring and Bracing. All bracing and shoring shall conform to Section 5-1.02A and Section 7-1.01J of the State Specifications and the Division of Industrial Safety Construction Safety Orders which are currently in use.

The Contractor shall take all necessary measures to protect the workmen and adjacent areas and structures from the hazards of the trenching or excavation operations.

Safe and suitable ladders shall be provided for all excavations over five feet in depth. The ladders shall project two feet above the top of the trench and one such ladder shall be provided for each 100 feet of open cut.

7-1.07 Pressure Test. All Ductile Iron Pipe and PVC Pipe shall be subjected to a hydrostatic pressure test of a minimum of 100% above the working pressure in the area, but in no case less than 150 pounds per square inch, after installation of all sections of pipe and prior to connection to the existing water system.

The pressure test shall not be made until at least thirty-six (36) hours after the last concrete thrust block has been poured when Type III cement is used, or at least seven (7) days after the last thrust block has been poured when Type II cement is used. The test pressure shall be held at the specified pressure for a period of four (4) hours without loss. During the filling of the line and before applying the specified test pressure, all air shall be expelled from the pipe. If necessary, saddle type taps shall be made as directed at the points of highest elevation and plugged upon completion of the test. Each section of pipe line shall be slowly filled with water and the specified test pressure applied at the point of lowest elevation by means of a pump connected to the pipe by a corporation cock or test plug assembly. During the test, all exposed pipe, fittings, valves, hydrants, and joints will be carefully examined. Any cracked or defective material shall be removed and replaced by the Contractor to the satisfaction of the Engineer, and no additional payment will be made therefor. The test shall be repeated until no defects remain.

Contractor is required to conduct pressure and bacteriological testing on his isolated system; i.e., he is not allowed to connect into the City's system until the tests are passed. This will usually require that plugs and thrust blocks be used, which may not appear on the Plans. Closing pieces will be laid after testing is complete. No testing against closed valves is allowed.

7-1.08 Leakage Test. All PVC Pipe shall be subjected to a leakage test after completion of backfill and installation of street base.

The same pressure as stated in the "Pressure Test" above shall be maintained in the pipe line for a period of four (4) hours. Prior to starting the test, the pipe line shall be filled with water for twenty-four (24) hours. All air shall be expelled from the pipe in the manner specified in this section for the pressure test. The water lost due to leakage shall be none. If water leakage occurs in the pipe line being tested, the Contractor shall locate and repair the defective joints or fittings, and no additional payment will be made therefor. The Contractor shall re-test the pipe line until leakage has been eliminated.

7-1.09 Flushing and Chlorinating. Prior to chlorination, all newly installed pipe line shall be thoroughly flushed. Chlorine may be applied by any of the standard methods, subject to the approval of the Engineer. The point of application of the chlorination agent shall be at the beginning of the pipe extension, or any valved section of it, and through a corporation stop inserted in the newly laid pipe.

Water from the existing distribution system shall be controlled to flow very slowly in the newly laid pipe during the application of chlorine. The rate of chlorine feed shall be in such proportion to the rate of water entering the pipe that the chlorine dose applied to the water entering the

newly laid pipe shall be at least 100 ppm. Precautions shall be taken to prevent back pressure causing a reversal of flow into pipe treated.

Treated water shall be retained in the pipe for a period of twenty-four hours. After the chlorine treated water has been retained for the required time, the chlorine residual at the pipe extremities and at representative points shall be at least five (5) parts per million. In the process of chlorinating, all valves and other appurtenances on the newly laid main shall be operated.

Following chlorination, all treated water shall be thoroughly flushed from the newly laid pipe line. The water throughout its length shall, upon test, both chemically and bacteriologically be proved equal to the water quality served the public from the existing water supply system. All samples and tests shall be at the expense of the contractor. Should the initial treatment, in the opinion of the Engineer, prove ineffective, the chlorination procedure shall be repeated until confirmed test show that the water sampled from the newly laid pipe conforms to the above requirements. Only after all testing is complete and upon approval of the Inspector, can the contractor connect the new facilities to the City's mains. Disposal of chlorinated water shall be the sole responsibility of the contractor.

There shall be a 24-hour waiting period after blowing off the main prior to taking bacteria samples. The initial bacteria tests shall be of the 72-hour duration type. If the initial bacteria test fails, two consecutive passing bacteria tests must be obtained prior to making the tie-in. The first of these two subsequent tests shall be of the 24-hour duration type, and the second shall be of the 72-hour duration type. Bacteria tests are valid for only 30 days. If there is more than a 30-day lapse between a passing bacteria test and the applicable tie-in, the bacteria test must be repeated prior to water main tie-in.

7-1.10 City-Owned Facilities. All existing water system materials are the property of the City of St. Helena. Any City-owned materials removed shall be delivered to the City Corporation Yard, or disposed of by the Contractor as directed by the Engineer.

7-1.11 Water Main Tie-ins and Abandonments. The Contractor shall notify the City of St. Helena Water Department forty-eight (48) hours prior to required mainline shutdowns to facilitate his tie-in or abandonment operations. All shutdowns and valve turning operations shall be performed by City of St. Helena Water Department personnel only.

Pipe and/or fittings furnished for tie-ins or abandonments shall be no smaller than the existing water main to which each tie-in or abandonment is made.

During the work, the Contractor shall exercise all necessary precautions to prevent the entrance of trench water or any other foreign material into the water main and shall conduct all operations in accordance with the most stringent sanitation practices. The interior of all appurtenances being installed shall be thoroughly swabbed with a strong HTH solution prior to installation.

7-1.12 Water Services. The Contractor shall install new copper service laterals at the locations shown on the Plans, including service saddles, ball valve corporation stop, Type "K" copper tubing lateral, spacer, meter boxes, traffic loading lids when required. New laterals shall be located as close as possible to existing laterals and as directed by the Engineer in the field. New service laterals shall be installed a minimum of five (5) feet from sewer laterals. All new service laterals shall be "flow" tested prior to installation of meter and overlaying of trench. Laterals which fail testing shall be repaired or replaced to the Engineers satisfaction and retested.

Upon completion and successful testing of the new water system, the Contractor shall remove the existing meter and tie-in the new service to the new meter box under City Water Department

inspection. The Contractor shall coordinate this work to provide minimum customer out-of-service time.

7-1.13 Fire Hydrant and Lateral Assembly. At the location(s) shown on the Plans, the Contractor shall provide and install a fire hydrant and lateral assembly per City of St. Helena Standard 101.

In addition, two blue pavement markers per hydrant shall be furnished to the City of St. Helena Fire Department and, if where fire hydrants are installed in locations where curbing exists, the curb shall be painted red for a total length of 30 ft. centered at the fire hydrant.

Fire hydrants shall conform to Section 10-15.02(i) of these specifications.

All hydrants shall be painted in accordance with the specifications shown on City of St. Helena Standard 101.

7-1.14 Meter Box Removal. The Contractor shall remove existing, abandoned meter boxes; remove and replace sidewalk, driveways, and/or restore existing landscaping, at the locations shown on the Plans, and as directed by the Engineer.

Full compensation for removing existing, abandoned meter boxes and replacing sidewalk, driveways, and/or restoring existing landscaping shall be considered as included in the contract price paid for meter box removal, and no additional allowance will be made therefor.

7-1.15 Bury Existing Valve. The Contractor shall remove existing valve box lids, (including lids for blow-offs when required) risers, and covers and replace structural section (with Class 2 base or concrete) and asphalt surfacing at the locations shown on the plans and as directed by the Engineer.

7-1.16 Cut and Plug Existing Water Main. The Contractor shall expose and cut and plug the existing water main to be abandoned, replace backfill, base material and asphalt or concrete surface at the locations shown on the Plans, and as directed by the Engineer.

Full compensation for abandoning existing water main and replacing backfill, base material and asphalt or concrete surface shall be considered as included in the contract price paid for abandoning existing water main, and no additional allowance will be made therefor.

1. ALL MATERIAL, WORKMANSHIP, AND CONSTRUCTION DETAILS SHALL CONFORM TO THE CITY OF ST. HELENA, "STANDARD SPECIFICATIONS FOR PUBLIC IMPROVEMENTS", JUNE 1993, INCLUDING ALL ADDENDA, STANDARD PLAN REVISIONS, AND SPECIAL PROVISIONS.

2. START EXCAVATION BY EXPOSING END OF EXISTING MAIN TO DETERMINE ITS LINE AND GRADE. START NEW MAIN 8–10 FEET FROM AND ON SAME LINE AND GRADE AS EXISTING MAIN. PIPE LAYING SHALL THEN BE ADJUSTED SO DEPTH OF NEW MAIN CONFORMS TO NOTE #3.

3. MINIMUM DEPTH OF COVER FROM FINISHED GRADE SHALL BE: 32" FOR 6" MAINS; 36" FOR 8" MAINS; 44" FOR 12" MAINS, AND 48" FOR 14" AND LARGER MAINS. 4" AND 10" MAINS MUST BE SPECIFICALLY APPROVED BY THE UTILITIES DEPARTMENT. 4" THROUGH 10" MAIN LINE VALVES SHALL BE RESILIENT SEAT GATE. 12" AND LARGER MAINLINE VALVES SHALL BE BUTTERFLY VALVES. BLOW–OFF VALVES SHALL BE 2" BALL VALVES WITH ROTATION STOPS.

4. NO. 12 INSULATED COPPER WIRE SHALL BE LAID ON TOP OF AND ALONG ENTIRE LENGTH OF ALL NON–METALLIC MAINS, AND SHALL BE EXTENDED TO THE SURFACE AT ALL VALVE LOCATIONS, BLOW–OFFS, AND METER BOXES SUFFICIENTLY FOR LOCATOR EQUIPMENT TO BE ATTACHED. FASTEN THE WIRE TO THE TOP OF THE PIPE SO AS NOT TO BE DISPLACED BY BACKFILLING PROCEDURE (ONE METHOD OF ACCOMPLISHING THIS IS TO AFFIX THE WIRE TO THE TOP OF PIPE WITH DUCT TAPE AT APPROXIMATELY 10 FOOT INTERVALS).

5. MAINS TO BE CONSTRUCTED WITHIN 10' OF SEWER PIPE REQUIRE SPECIAL INSTALLATION AND DESIGN MUST BE SPECIFICALLY APPROVED BY THE CITY ENGINEER.

6. ALL TRENCHING, BACKFILL, AND RESURFACING REQUIRED FOR INSTALLATION OF WATER SYSTEM FACILITIES SHALL BE PER CITY STANDARDS.

7. ONLY CITY WATER DEPARTMENT PERSONNEL SHALL OPERATE VALVES ON EXISTING WATER MAINS OR WATER SERVICES.

8. SERVICE LATERALS OTHER THAN THOSE SHOWN OR NOTED ON THE PLANS SHALL NOT BE INSTALLED PRIOR TO OBTAINING CITY APPROVAL.

9. UNLESS OTHERWISE SHOWN ON THE PLANS, 1" WATER SERVICE LATERALS SHALL BE INSTALLED IN RESIDENTIAL DEVELOPMENTS, AND 2" WATER SERVICE LATERALS SHALL BE INSTALLED IN COMMERCIAL DEVELOPMENTS.

10. WATER AND SEWER SERVICE LATERALS SHALL BE SEPARATED HORIZONTALLY BY A MINIMUM OF 5 FEET.

11. AT THE LOCATION OF EACH WATER SERVICE LATERAL, THE LETTER "W" SHALL BE INSCRIBED INTO THE FACE OF THE CURB. THE LETTER "W" SHALL BE 4" HIGH AND COMPLETELY LEGIBLE.

SCALE: NONE	CITY OF ST. HELENA	DATE: JUNE 1993
DRAWN: DRH	WATER MAIN CONSTRUCTION NOTES	STD. NO.
CHK:		100
APPVD:		

12. ALL COPPER WATER SERVICE TUBING SHALL BE IN CONFORMANCE WITH THE LATEST AWWA STANDARDS AS DESCRIBED IN ANSI/AWWA C800 OF THE LATEST REVISION, AND WITH ASTM B88, AND SHALL BE TYPE "K" SOFT TEMPER TUBING FOR 1" TUBING, AND TYPE "K' HARD TEMPER FOR 2" TUBING.

13. ALL METER BOXES, VAULTS, AND PITS SHALL BE BEDDED ON 3" MINIMUM THICK, 3/4" DRAIN ROCK, AB-2, OR OTHER CLEAN MATERIAL WITH TYPICAL SAND EQUIVALENT OF 20 MINIMUM, UNCONTAMINATED BY NATIVE SOIL, AGAINST COMPACTED OR UNDISTURBED BASE. THE GRAVEL BED SHALL EXTEND TO A 4" MINIMUM BEYOND ALL SIDES OF THE METER BOX. BOX SHALL BE SET FLUSH WITH TOP OF CURB, SIDEWALK OR GROUND, WHICHEVER IS APPLICABLE. LOT NUMBERS MUST BE NOTED ON TOP SIDE OF METER BOX WITH A PERMANENT MARKING PEN.

14. METER BOXES SHALL BE LOCATED OUT OF TRAFFIC LOADING AREAS WHENEVER POSSIBLE.

15. METER BOXES AND VAULTS SHALL BE SET SO THAT THE READING LIDS ARE ALIGNED OVER THE METER REGISTERS AS CLOSELY AS POSSIBLE.

16. UNLESS OTHERWISE APPROVED BY THE CITY ENGINEER, THE ONSITE WATER LINE SHALL BE THE SAME SIZE AS THE WATER METER.

17. FOR SERVICES LARGER THAN 1", IF EITHER THE WATER SERVICE LATERAL OR THE ONSITE BUILDING LINE IS ALREADY EXISTING WITHIN THE TOLERENCES SPECIFIED ON THE STANDARD PLAN, THE LAST ONE INSTALLED SHALL BE ON THE SAME LINE AND GRADE AS THE EXISTING ONE.

18. ITEMS SPECIFIED ON STANDARD PLANS, OR APPROVED BY THE CITY ENGINEER, ARE APPROVED FOR USE.

19. METER MANIFOLDS MUST BE DETAILED AND APPROVED BY THE CITY ENGINEER. IN GENERAL, MANIFOLDS WHERE ALL FITTINGS ARE 2" OR LESS, SHALL BE CONSTRUCTED FROM THREADED BRASS PIPE AND FITTINGS FROM THE END OF THE SERVICE LATERAL TO THE METER CONNECTION. NO PLASTIC PIPE SHALL BE USED IN CONSTRUCTING MANIFOLDS OF ANY SIZE. NO MORE THAN SIX METERS MAY BE MANIFOLDED OFF OF A SINGLE WATER SERVICE LATERAL, WITH NO MORE THAN 3 ON EITHER SIDE OF THE SERVICE.

20. GASKETS FOR FLANGE FITTINGS SHALL CONFORM TO AWWA STD. C115.

21. TO ABANDON A WATER SERVICE, EXPOSE AND TURN OFF CORPORATION STOP, THEN SEVER THE LATERAL CONNECTION.

22. THERE SHALL BE NO UNMETERED CONNECTIONS TO THE CITY OF ST. HELENA WATER SYSTEM, INCLUDING CONNECTIONS BYPASSING METER FOR TESTING ONSITE PLUMBING, OR FOR OBTAINING CONSTRUCTION WATER. PRESSURE TESTING AGAINST VALVES WILL NOT BE ALLOWED. WHEN A SUBDIVISION WATER MAIN HAS BEEN ACCEPTED AND TIED-IN, THE INDIVIDUAL CURB STOPS WILL CONSTITUTE A STRAIGHT TIE-IN CONNECTION. SUCH CONNECTIONS WILL BE SEVERED BY THE WATER DEPARTMENT AND WILL RESULT IN PENALTIES INCLUDING PAYMENT OF FINES AND ESTIMATED WATER USAGE FEES.

SCALE: NONE	CITY OF ST. HELENA	DATE: JUNE 19[illegible]
DRAWN: CKM	WATER MAIN CONSTRUCTION NOTES	STD. NO.
CHK: TMS		100
APPVD: MSO		

23. UPON APPLICATION, CITY FORCES WILL FURNISH 2" TEMPORARY CHECK VALVE AND METER ON THE END OF THE EXISTING MAIN OR AT NEARBY FIRE HYDRANT FOR CONSTRUCTION WATER.

24. BEFORE COMBUSTIBLE MATERIALS MAY BE STORED OR CONSTRUCTED ON SITE, THE FIRE DEPARTMENT MUST APPROVE FIRE FLOW AND ACCESS PER CITY CODE. BEFORE A FIRE HYDRANT MAY BE PLACED IN SERVICE, A HIGH VELOCITY FLUSHING OF THE HYDRANT LATERAL SHALL BE WITNESSED AND APPROVED BY WATER DEPARTMENT PERSONNEL. HIGH VELOCITY FLUSHING SHALL CONSIST OF OPERATING THE HYDRANT WITH A SUITABLE DIFFUSER. UNDER WATER DEPARTMENT SUPERVISION, THE HYDRANT LATERAL IS FLUSHED UNTIL WATER DEPARTMENT PERSONNEL ARE SATISFIED THAT THE LINES ARE CLEAR OF DEBRIS.

25. UPON COMPLETION OF CONSTRUCTION, FINAL CONNECTION WILL BE MADE BY THE CONTRACTOR AT THE DEVELOPER'S EXPENSE UNDER INSPECTION BY A CITY WATER DEPARTMENT REPRESENTATIVE, UNLESS OTHERWISE SPECIFIED ON THE PLANS.

26. WHEN A CONNECTION IS REQUIRED TO AN EXISTING WATER MAIN, THE CONTRACTOR SHALL PROVIDE ALL EXCAVATION, SHORING, BACKFILL AND TRENCH RESURFACING PER CITY STANDARDS. WHERE THE CONNECTION IS TO BE A "HOT TAP", THE CONTRACTOR SHALL PROVIDE AND INSTALL THE TAPPING VALVE AND SLEEVE, AND ANY OTHER HARDWARE REQUIRED AND WILL MAKE THE TAP AT THE DEVELOPER'S EXPENSE. NO HOT TAP SHALL BE MADE WITHIN 4 FEET OF A JOINT (MEASURED FROM JOINT TO CENTERLINE OF INTERSECTING PIPE). THE JOINT SHALL BE REMOVED, AND THE PROPOSED HOT TAP SHALL BE REPLACED WITH A "CUT-IN" TEE. WHEN A CUT-IN TEE AND VALVE(S) ASSEMBLY IS REQUIRED ON THE PLANS, THE CONTRACTOR SHALL PROVIDE AND INSTALL THE ENTIRE ASSEMBLY (INCLUDING VALVES), AND ANY OTHER HARDWARE NECESSARY UNDER CITY WATER DEPARTMENT INSPECTION, AND SHALL PROVIDE ALL OTHER WORK AND MATERIALS NECESSARY TO COMPLETE THE INSTALLATION TO CITY STANDARDS.

27. THE CONTRACTOR SHALL COORDINATE ALL WATER MAIN CONNECTION WORK WITH THE CITY WATER DEPARTMENT, AT (707) 963-2741 and 963-7917, AND SHALL GIVE NOTICE, IN ACCORDANCE WITH CONSTRUCTION SPECIFICATIONS, PRIOR TO COMMENCING WORK.

28. AFTER A STREET HAS BEEN OVERLAID, ALL WATER VALVE BOXES WILL BE MARKED IN WHITE PAINT BEFORE THE CLOSE OF THAT WORK DAY.

29. WITHIN 48 HOURS OF PAVING, ALL WATER VALVE BOXES WILL BE BROUGHT TO GRADE AND INSPECTED.

30. ALL DUCTILE IRON PIPE & FITTINGS SHALL BE WRAPPED WITH 8-MIL THICKNESS POLY SLEEVE, AS PER PIPE MANUFACTURERS RECOMMENDATIONS.

SCALE: NONE	CITY OF ST. HELENA	DATE: JUNE 1993
DRAWN: CKM	WATER MAIN CONSTRUCTION NOTES	STD. NO.
CHK: TMS		100
APPVD: MSO		

NOTES:

1. WHERE LOCATED IN SIDEWALK, A MINIMUM OF 48" CLEAR PASSAGE US REQUIRED BEHIND HYDRANT.
2. WHERE LOCATED IN OPEN OR UNIMPROVED AREA, PROVIDE 48" SQUARE SLAB AROUND HYDRANT. (HYDRANT CENTERED IN SLAB.)
3. FURNISH TWO BLUE PAVEMENT MARKERS PER HYDRANT TO FIRE DEPARTMENT.
4. CURB SHALL BE PAINTED RED FOR A TOTAL LENGTH OF 30', CENTERED AT THE HYDRANT.

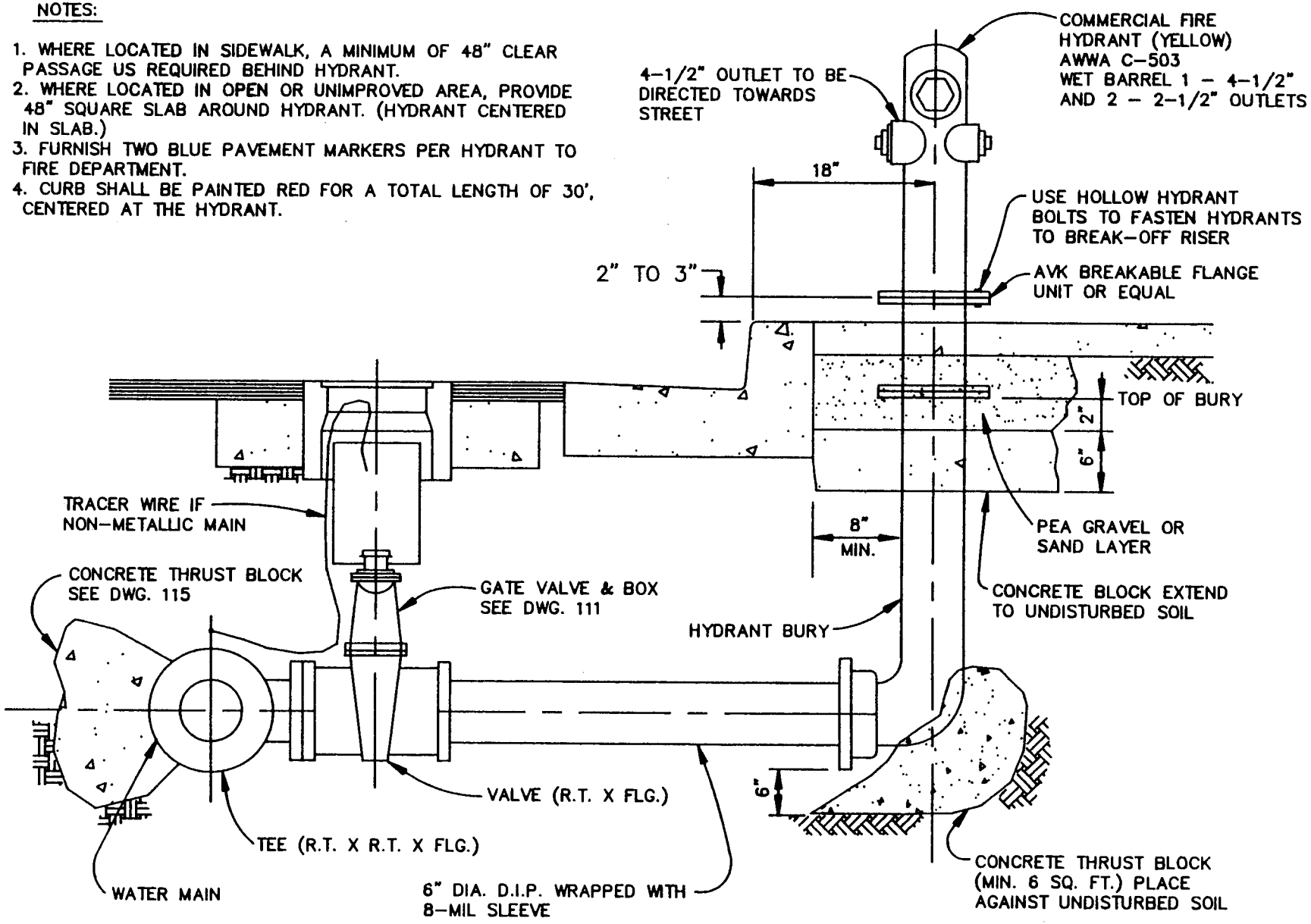

SCALE: NONE	CITY OF ST. HELENA
DRAWN: DRH	
CHK:	FIRE HYDRANT
APPVD:	
DATE: JUNE 19[illegible]	STD. NO. 101

METER BOX BEHIND CURB IN ALL CASES. WHERE CURB/GUTTER DOES NOT EXIST, SET AS DIRECTED BY CITY ENGINEER.

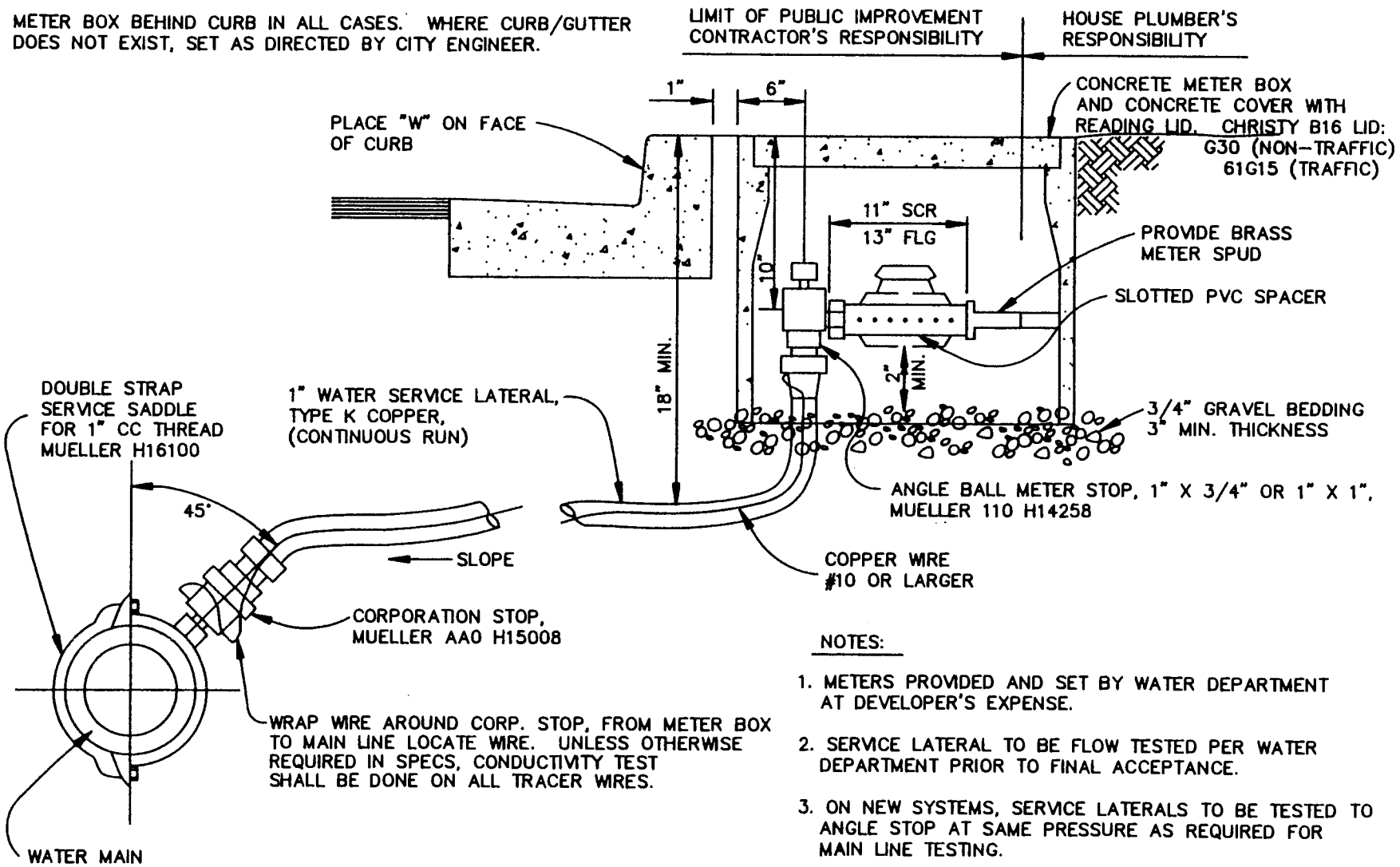

NOTES:

1. METERS PROVIDED AND SET BY WATER DEPARTMENT AT DEVELOPER'S EXPENSE.
2. SERVICE LATERAL TO BE FLOW TESTED PER WATER DEPARTMENT PRIOR TO FINAL ACCEPTANCE.
3. ON NEW SYSTEMS, SERVICE LATERALS TO BE TESTED TO ANGLE STOP AT SAME PRESSURE AS REQUIRED FOR MAIN LINE TESTING.
4. IN TRAFFIC LOAD AREAS, BOX AND STEEL COVER TO BE SET FLUSH WITH SURFACE.

SCALE: NONE
DRAWN: DRH
CHK:
APPVD:

CITY OF ST. HELENA

1" AND DOMESTIC WATER SERVICE

DATE: JUNE 1993

STD. NO. 102

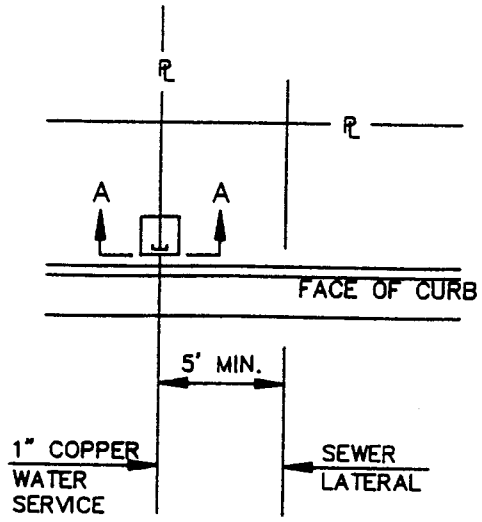

PLAN VIEW

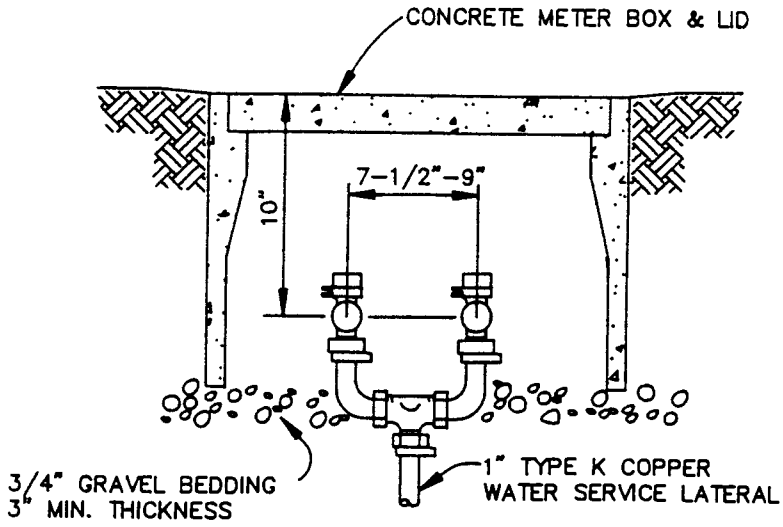

SECTION A-A

SINGLE METER BOX INSTALLATION
FOR DUAL 3/4" MANIFOLD

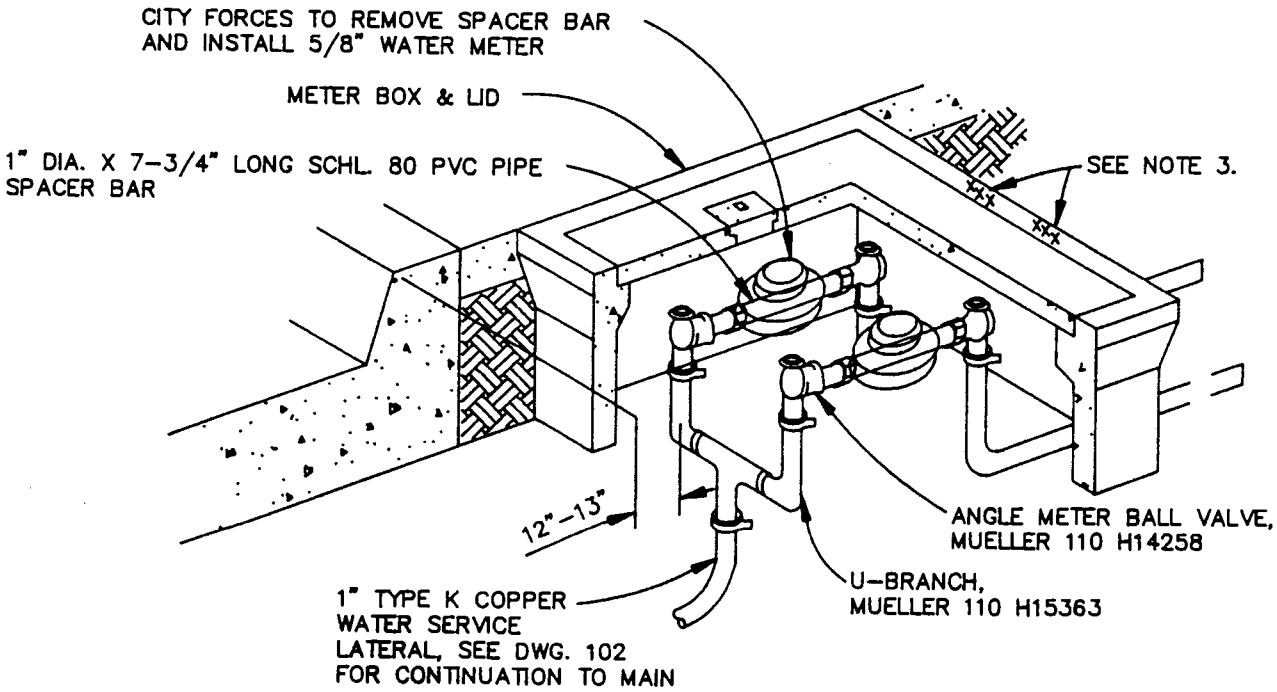

NOTES:

1. METER BOX TO BE INSTALLED SO THAT READING LIDS ARE CENTERED OVER THE METER REGISTERS.
2. IN TRAFFIC LOADING AREAS, BOX TO BE INSTALLED SO THAT THE STEEL COVER IS SET FLUSH WITH SURFACE.
3. PRIOR TO METER SET, ADDRESS TO BE CLEARLY MARKED ON TOPSIDE LIP OF METER BOX OVER EACH SERVICE WITH PERMANENT FELT MARKER.

SCALE: NONE	CITY OF ST. HELENA	DATE: JUNE 19[illegible]
DRAWN: CKM	1" WATER SERVICE LATERAL INSTALLATION FOR TWO-5/8" METERS	STD. NO.
CHK: TMS		103
APPVD: MSO		

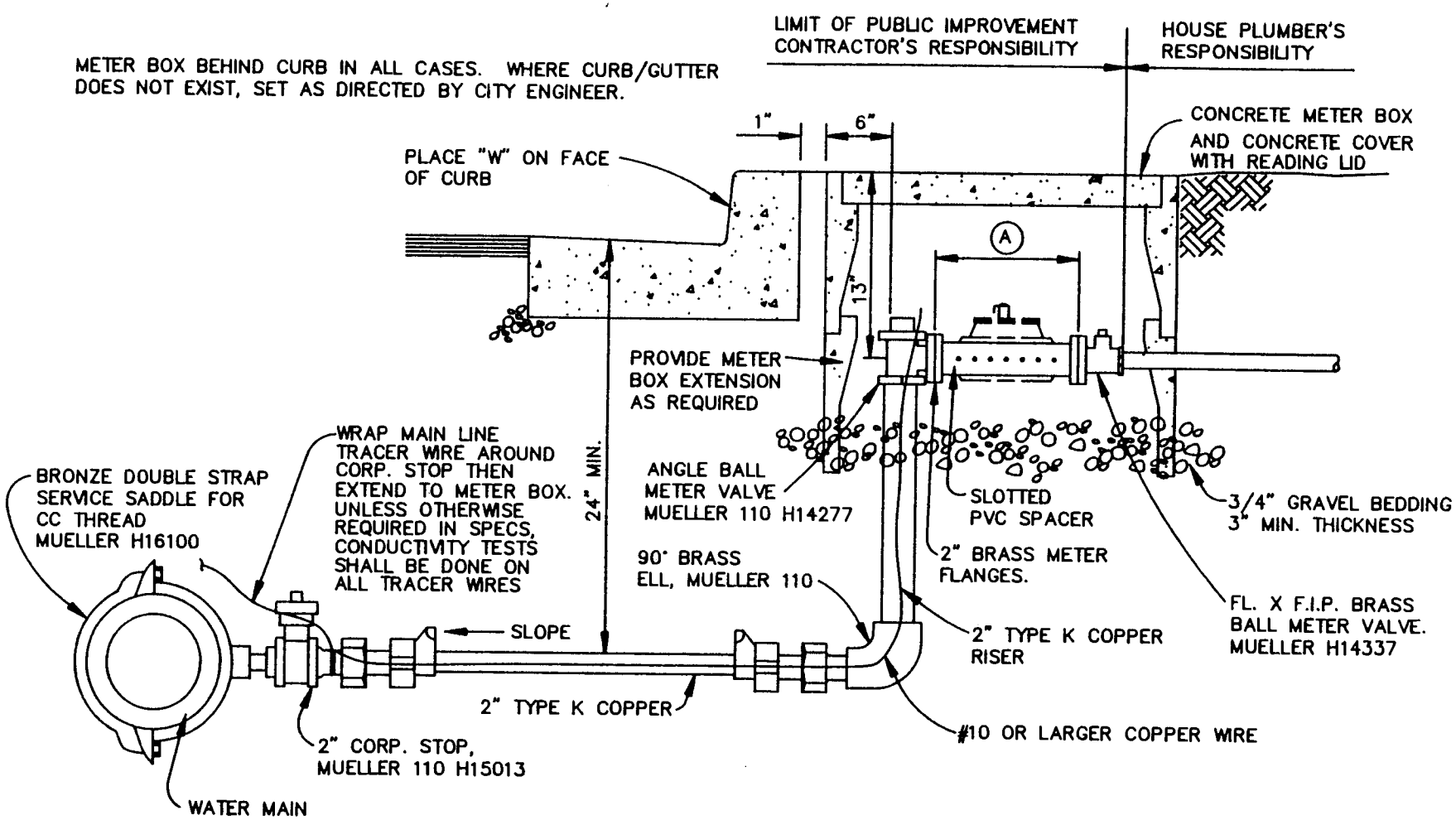

NOTES:

1. METERS PROVIDED AND SET BY WATER DEPARTMENT AT DEVELOPER'S EXPENSE.
2. SERVICE LATERAL TO BE FLOW TESTED PER WATER DEPARTMENT REQUIREMENTS PRIOR TO FINAL ACCEPTANCE.
3. ON NEW SYSTEMS, SERVICE LATERALS TO BE TESTED TO ANGLE STOP AT SAME PRESSURE REQUIRED IN MAIN LINE TESTING.
4. IN TRAFFIC LOAD AREAS, BOX AND STEEL COVER TO BE SET FLUSH WITH SURFACE.

SERVICE	CHRISTY METER BOX	LID		(A)
		NON-TRAFFIC	TRAFFIC	
1 1/2"	B-36	E70	61G70	13" (100 G.P.M.)
2"	B-48	M75	61G75	17" (160 G.P.M.)

SCALE: NONE
DRAWN: DRH
CHK:
APPVD:

CITY OF ST. HELENA

1 1/2", 2", AND LARGER DOMESTIC WATER SERVICE

DATE: JUNE 1993

STD. NO. 104

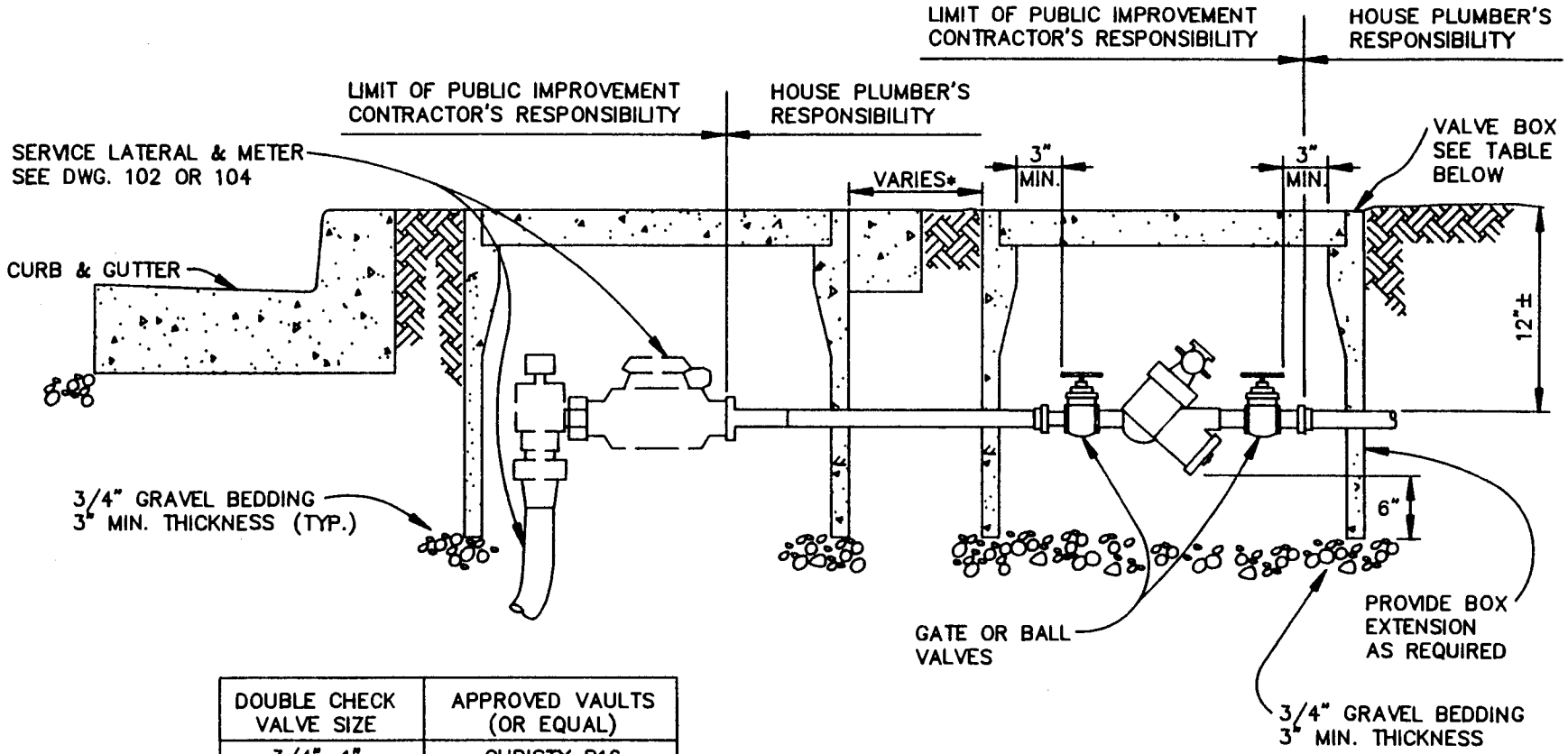

DOUBLE CHECK VALVE SIZE	APPROVED VAULTS (OR EQUAL)
3/4", 1"	CHRISTY B16
1-1/2", 2"	CHRISTY B30

NOTES:

1. DOUBLE CHECK VALVE ASSEMBLIES ARE USED FOR DOMESTIC SERVICE TO PARCELS WITH AN EXISTING WELL SYSTEM, OR AS REQUIRED BY CITY ENGINEER.
2. VAULTS SHOWN ARE SIZED FOR WATTS MODEL ASSEMBLIES. OTHER APPROVED DOUBLE CHECK VALVE ASSEMBLIES MAY VARY IN SIZE AND REQUIRE LARGER VAULTS.
3. APPROVED DOUBLE CHECK VALVES SHALL BE AS LISTED BY THE UNIVERSITY OF SOUTHERN CALIFORNIA STUDY FOR CROSS CONNECTION CONTROL..., DATED AUGUST 22, 1980, INCLUDING ALL REVISIONS.
4. ALL DOUBLE CHECK VALVE ASSEMBLIES SHALL BE PROVIDED WITH A MINIMUM OF FOUR (4) TEST COCKS.
5. SEE STD. DWG. 105 FOR TYPICAL INSTALLATION OF REDUCED PRESSURE TYPE BACKFLOW PREVENTION DEVICE (TO BE USED FOR ALL COMMERCIAL, PROFESSIONAL, INDUSTRIAL, MORTUARY, OR ANY USE WHERE TOXIC OR HAZARDOUS MATERIALS MAY BE INVOLVED OR AS DETERMINED BY THE CITY ENGINEER).
6. PIPING FROM METER TO DOUBLE CHECK VALVE ASSEMBLY AND THE DOUBLE CHECK VALVE ASSEMBLY SHALL BE THE SAME SIZES AS THE METER UNLESS OTHERWISE APPROVED BY THE CITY ENGINEER.
7. DOUBLE CHECK VALVE/BACKFLOW PREVENTER TO BE INSTALLED BEFORE CONNECTION POINT AND AS APPROVED BY CITY ENGINEER.

* PER APPROVAL OF CITY ENGINEER

SCALE: NONE
DRAWN: CKM
CHK: TMS
APPVD: MSO

CITY OF ST. HELENA

3/4" – 2" DOUBLE CHECK VALVE
TYPE BACKFLOW PREVENTER

DATE: JUNE 19

STD. NO. 105

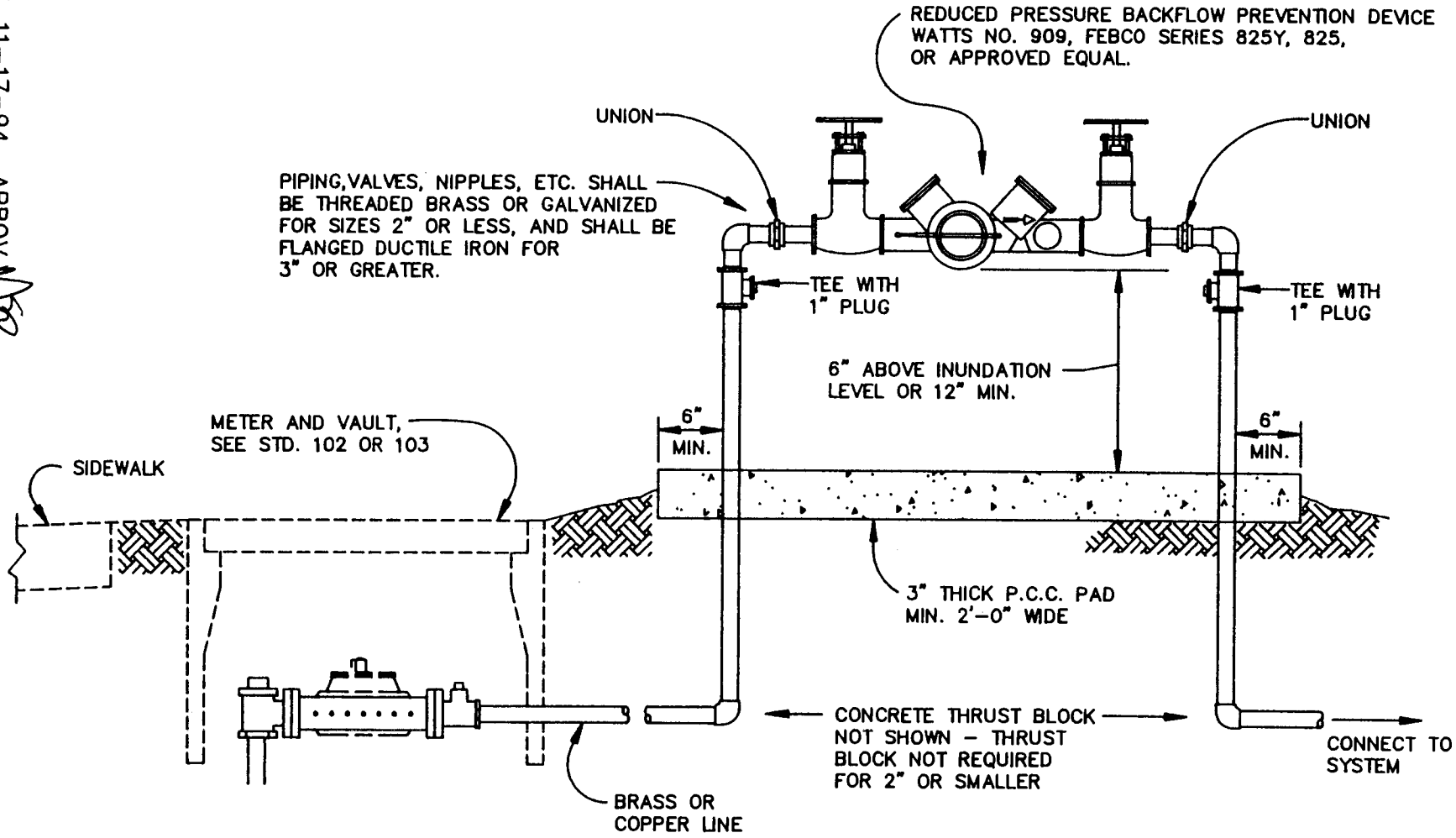

NOTES:

1. REDUCED PRESSURE TYPE BLACKFLOW PREVENTION DEVICES SHALL BE REQUIRED FOR ANY USE WHERE TOXIC MATERIALS ARE USED OR WHERE POSITIVE PROTECTION FOR THE PUBLIC WATER SUPPLY IS REQUIRED. TYPICAL APPLICATIONS INCLUDE: IRRIGATION SERVICES, COMMERCIAL SERVICES, INDUSTRIAL SERVICES, HOSPITALS, LABORATORIES, MORTUARIES, OR AS DETERMINED BY THE CITY ENGINEER. (TITLE 17 CAL. ADMINISTRATION CODE)

2. APPROVED REDUCED PRESSURE TYPE BACKFLOW PREVENTION DEVICES SHALL BE AS LISTED BY THE UNIVERSITY OF SOUTHERN CALIFORNIA STUDY, LATEST REVISION.

3. BACKFLOW PREVENTION DEVICES SHALL BE INSTALLED ADJACENT TO AND ON THE PROPERTY SIDE OF SIDEWALK WHERE APPLICABLE. THE ASSEMBLY SHALL BE INSTALLED AS CLOSE TO THE WATER METER LOCATION AS PRACTICAL.

4. DEVICE TO BE SAME SIZE OR LARGER THAN SERVICE METER.

5. LANDSCAPING OR OTHER SCREENING AROUND THE BACKFLOW DEVICE SHALL BE AS SHOWN ON IMPROVEMENT PLANS, AS APPROVED BY THE CITY ENGINEER.

REV. 11-17-94 APROV. [illegible]

SCALE: NONE
DRAWN: CKM
CHK: TMS
APPVD: MSO

CITY OF ST. HELENA

REDUCED PRESSURE BACKFLOW PREVENTER

DATE: FEB. 1993

STD. NO. 106

Deleted

SINGLE SERVICE

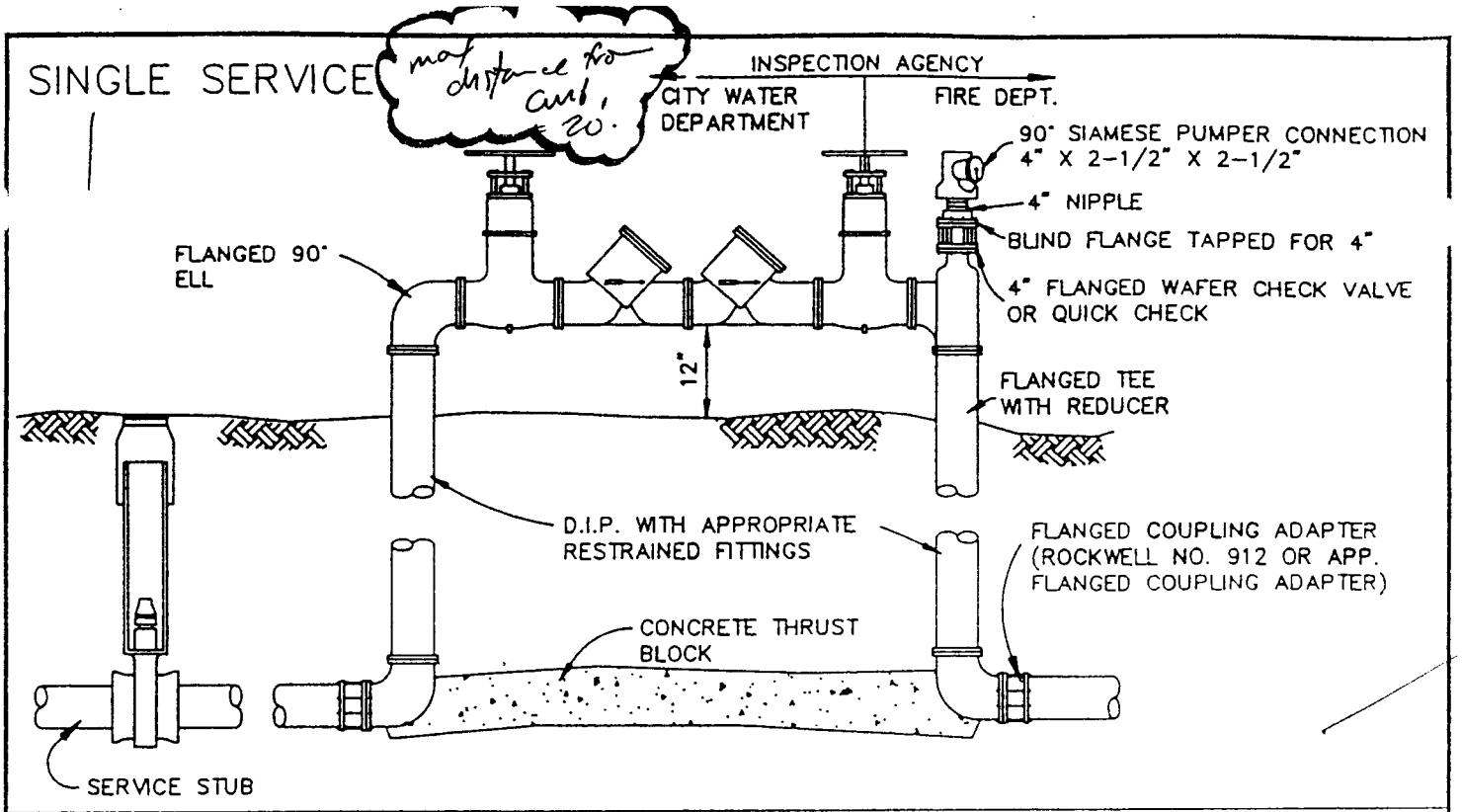

DOUBLE SERVICE

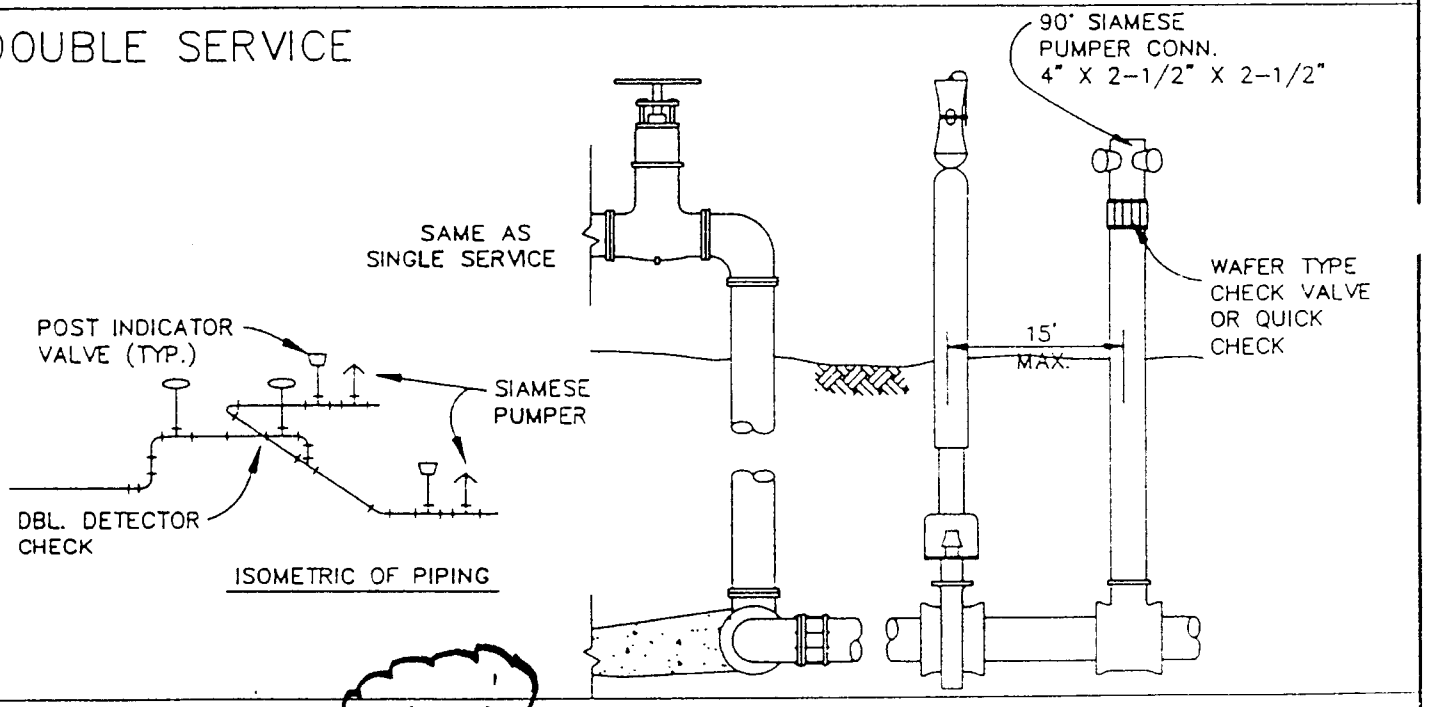

NOTES:

1. INSTALL FIRE HYDRANT WITHIN ~~50~~ 30 to 100 FEET OF SIAMESE PUMPER CONNECTION, AS SHOWN ON APPROVED PLANS.
2. LOCATION TO BE APPROVED BY THE CITY ENGINEER AND FIRE DEPARTMENT.
3. ALL ABOVE GROUND VALVES AND POST INDICATOR VALVES SHALL BE EQUIPPED WITH TAMPER SWITCH DEVICES AS APPROVED BY THE FIRE DEPARTMENT.

U.S.C. APPROVED DOUBLE DETECTOR CHECK VALVE ASSEMBLY – W/ O.S. & Y. GATE VALVE CHAINED IN OPEN. POSTITION. BYPASS PIPING TO INCLUDE DOUBLE CHECK VALVE AND PROVISIONS FOR METER TO BE SET BY CITY (BADGER RECORDALL MODEL 25 BRONZE)

REVISED 6/96

SCALE: NONE	CITY OF ST. HELENA	DATE: JUNE 1993
DRAWN: DRH	DOUBLE DETECTOR CHECK VALVE SINGLE & DOUBLE SERVICE	STD. NO. 108
CHK:		
APPVD:		

VAULT SIZES

D.C. SIZE	WIDTH	LENGTH
4"	4'	4'
6"	4'	4'
8"	5'	5'
10"	5'	5'

NOTES

THE POST INDICATOR VALVE SHALL BE INSTALLED AS CLOSE AS POSSIBLE TO THE DETECTOR CHECK VAULT. IF A POST INDICATOR CANNOT BE INSTALLED, AN O.S. & Y. VALVE WITH LOCKING CHAIN MUST BE INSTALLED INSIDE THE VAULT ON THE PROPERTY SIDE OF THE DETECTOR CHECK. HOWEVER, CITY APPROVAL MUST BE OBTAINED PRIOR TO THE INSTALLAION OF AN O.S. & Y. VALVE. POST INDICATOR VALVES SHALL BE PROVIDED WITH ELECTRONIC SUPERVISION (MONITORING) AS PER FIRE DEPARTMENT REQUIREMENTS. ALTERNATIVES TO ELECTRONIC MONITORING REQUIRE FIRE DEPARTMENT APPROVAL.

ALL FIRE LINE SERVICES TO THE POST INDICATOR VALVE SHALL BE TESTED BY THE CUSTOMER & INSPECTED BY THE PUBLIC WORKS DEPT. ALL ON-SITE FIRE LINES, HYDRANTS, AND THE PIV SHALL BE TESTED AND INSPECTED BY THE FIRE DEPT PER CITY FIRE CODE.

SEE STD 100 FOR CONSTRUCTION NOTES.

THE FIRE DEPT. CONNECTION SHOULD BE INSTALLED NOT LESS THAN 18" AND NOT MORE THAN 5' ABOVE THE ADJACENT ACCESS GRADE LEVEL, AND LOCATED AS REQUIRED BY THE FIRE DEPT.

POST INDICATOR VALVES(PIV) SHALL BE LOCKED WITH A BREAK-AWAY LOCK. THE TOP OF PIV SHALL NOT BE LESS THAN 36" ABOVE FINISHED GRADE. SHALL ALSO BE PROPERLY PROTECTED AGAINST MECHANICAL DAMAGE WHERE NECESSARY.

FIRE LINES SHALL BE FLUSHED AND ADEQUATE FIRE FLOW PROVIDED PRIOR TO COMBUSTIBLE MATERIALS BEING STORED OR CONSTRUCTION BEGINNING ON-SITE (SEE WATER MAIN CONSTRUCTION SPECIFICATIONS).

REV 11-11-94 APROV. MSO

SHEET 2 OF 2

SCALE: NONE	CITY OF ST. HELENA	DATE: JUNE 1993
DRAWN: DRH	DOUBLE DETECTOR CHECK VALVE	STD. NO.
CHK:		108
APPVD: MSO		

NOTES:

1. INSTALL FIRE HYDRANT WITHIN 50 FEET OF SIAMESE PUMPER CONNECTION, AS SHOWN ON APPROVED PLANS.
2. LOCATION TO BE APPROVED BY THE CITY ENGINEER AND FIRE DEPARTMENT.
3. IRRIGATION AND DOMESTIC SERVICE SIZE AS REQUIRED BY BUILDING DEPARTMENT.

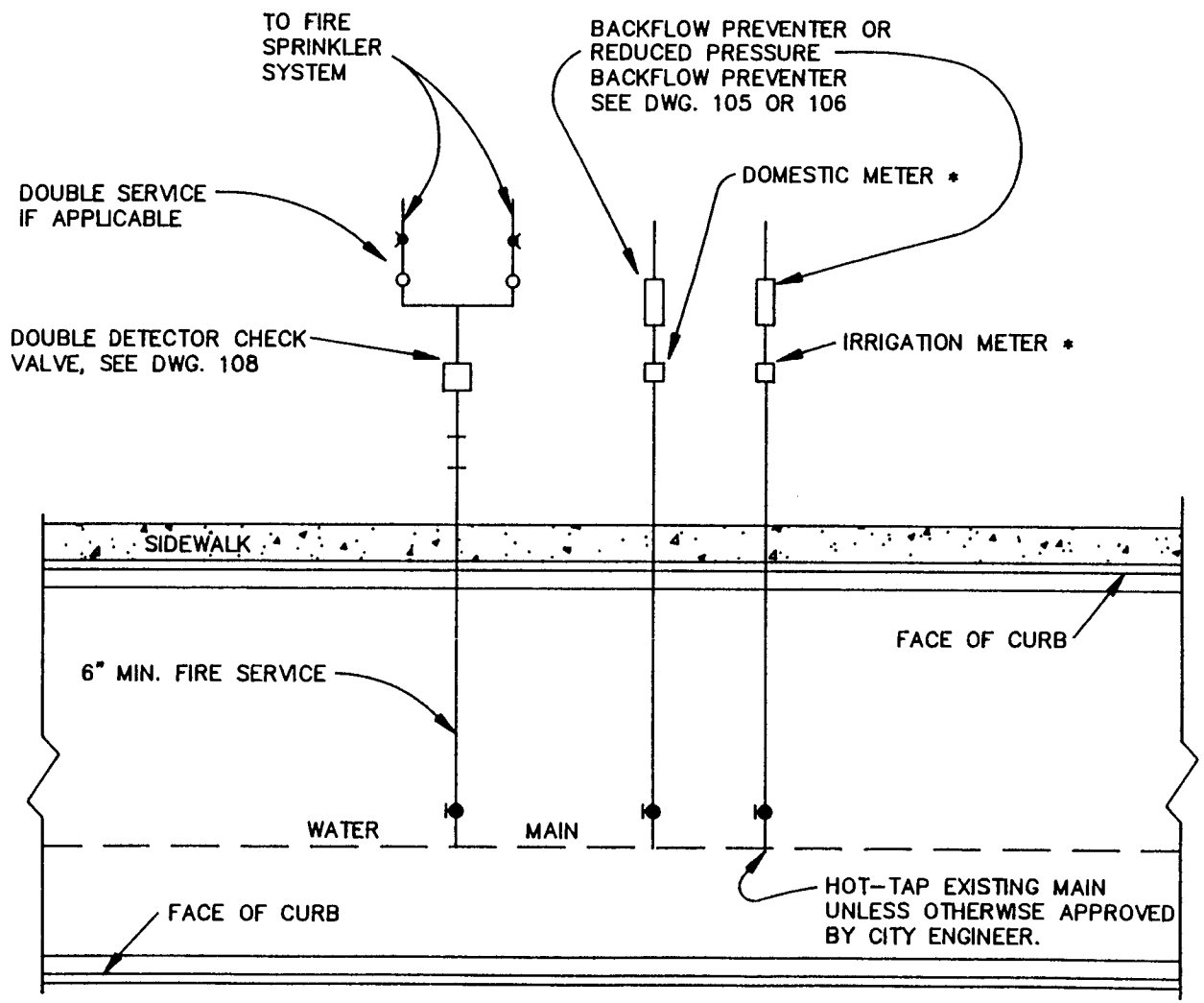

* DOMESTIC AND IRRIGATION TAPS MAY BE COMBINED WITH PRIOR APPROVAL BY THE CITY ENGINEER.

REV. 11-11-94 APROV. MSO

SCALE: NONE
DRAWN: CKM
CHK: TMS
APPVD: MSO

CITY OF ST. HELENA

TYPICAL WATER SERVICE CONNECTIONS WITH FIRE SERVICE

DATE: FEB. 1993

STD. NO. 109

DELETED

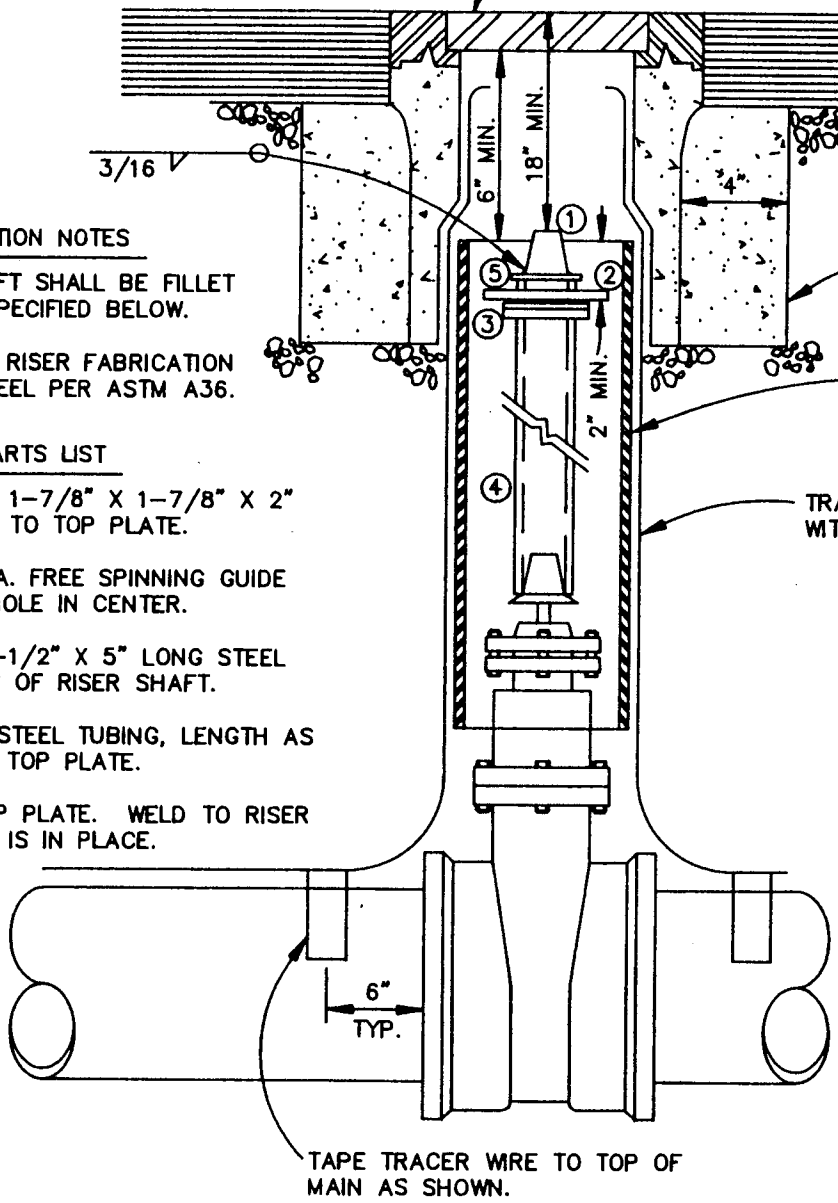

STEM EXTENSION FABRICATION NOTES

1. ALL WELDS TO RISER SHAFT SHALL BE FILLET WELD ALL AROUND. AS SPECIFIED BELOW.
2. ALL STEEL REQUIRED FOR RISER FABRICATION SHALL BE STRUCTURAL STEEL PER ASTM A36.

VALVE STEM EXTENSION PARTS LIST

1. VALVE OPERATING NUT OR 1-7/8" X 1-7/8" X 2" HIGH, SOLID STEEL WELDED TO TOP PLATE.
2. 3/16" THICK X 7-1/2" DIA. FREE SPINNING GUIDE PLATE WITH 3-5/8" DIA. HOLE IN CENTER.
3. TWO 3/16" X 1-1/2" X 1-1/2" X 5" LONG STEEL ANGLE WELD TO TWO SIDES OF RISER SHAFT.
4. 2-1/2" X 3/16" SQUARE STEEL TUBING, LENGTH AS REQUIRED. EDGE WELD TO TOP PLATE.
5. 3" X 3" X 1/4" STEEL TOP PLATE. WELD TO RISER SHAFT AFTER GUIDE PLATE IS IN PLACE.

NOTES:

1. IF VALVE IS INSTALLED SO THAT THE TOP OF THE OPERATING NUT IS LESS THAN 18" BELOW FINISHED GRADE, THE VALVE STEM RISER IS NOT REQUIRED.
2. VALVES 2" THROUGH 10" SHALL BE RESILIENT WEDGE GATE VALVES AND VALVES 12" AND LARGER SHALL BE BUTTERFLY VALVES (SEE DWG. 125), UNLESS OTHERWISE APPROVED BY THE CITY ENGINEER.
3. ALL EXTERNAL BOLTS AND NUTS ON VALVES SHALL BE NO.5 GRADED BOLTS WITH COATING, AND VALVE ASSEMBLY SHALL BE WRAPPED WITH 8 MIL POLYETHYLENE SECURED WITH TAPE.
4. SEE SECTION 5, GENERAL CONSTRUCTION NOTES.

SCALE: NONE
DRAWN: CKM
CHK: TMS
APPVD: MSO

CITY OF ST. HELENA

TYPICAL GATE VALVE AND VALVE BOX WITH RISER

DATE: JUNE 1993

STD. NO. 111

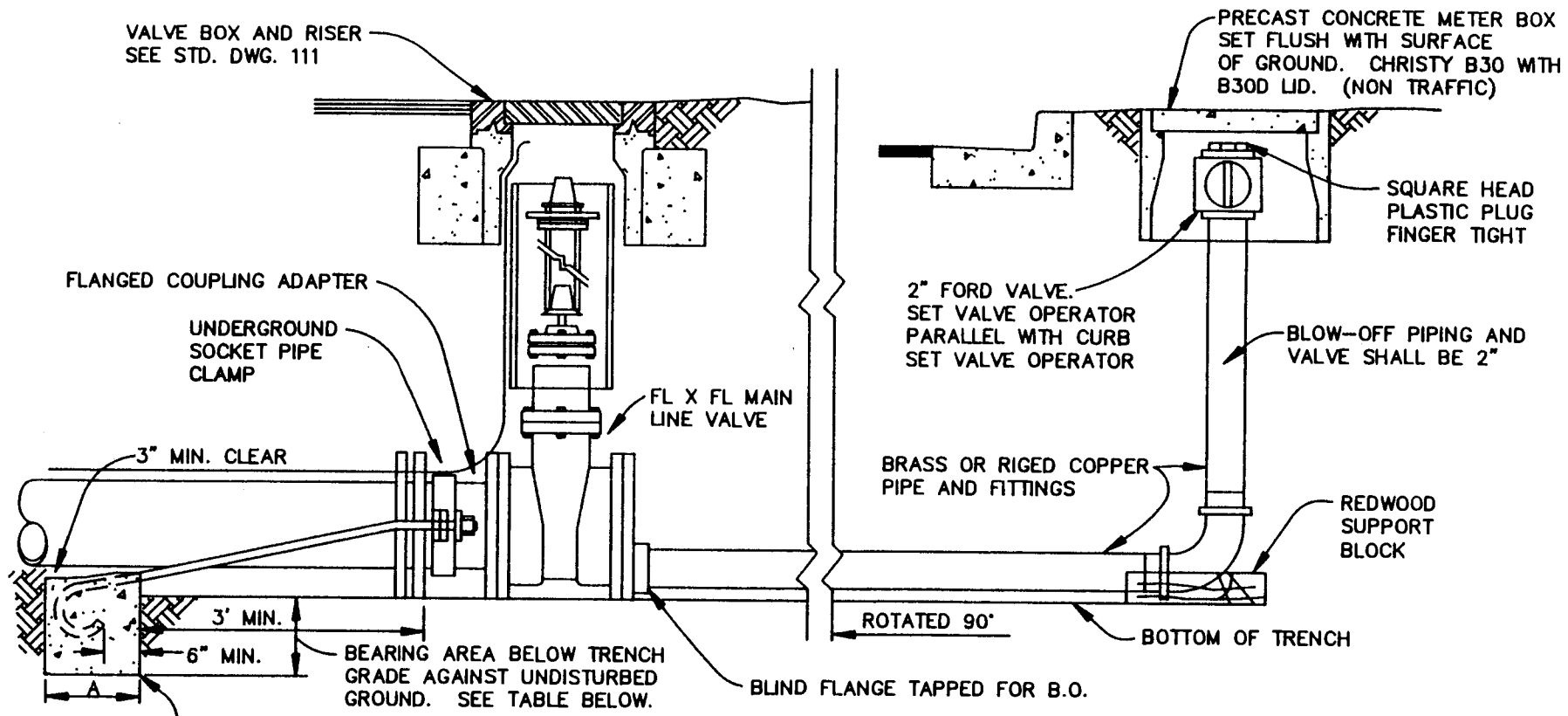

CONCRETE SHALL EXTEND AT LEAST TO THE UNDISTURBED EARTH AT BOTH SIDES OF THE TRENCH.

MINIMUM DIMENSIONS				
PIPE SIZE	TIE RODS	BEARING AREA	A	SIZE B.O.
6"	5/8"	4 SQ. FT.	2'	2"
8"	3/4"	7 SQ. FT.	3'	2"
12"	1-1/8"	16 SQ. FT.	3'	2"
OVER 12"	BY THE DESIGN ENGI			

NOTES:

1. TO BE INSTALLED IN CASES WHERE MAIN MAY BE EXTENDED IN FUTURE AND NO VALVE EXISTS WITHIN 250 FEET.
2. BLOW-OFF SHALL NOT BE INSTALLED WITHIN THE TRAVELED WAY. IF THE MAIN ENDS WITHIN STREET AREA, BLOW-OFF TO BE EXTENDED TO AN AREA OUTSIDE OF THE TRAVELED WAY.
3. FOR 12" PIPE SIZE OR LARGER, USE FL X FL MAIN LINE VALVE PER STD. DWG. 111 & FL X MJ ADAPTER & MJ PLUG TAPPED AT BOTTON FOR B.O.
4. ALL EXPOSED THREADS SHALL BE PAINTED WITH BITUMASTIC PAINT OR APPROVED SUBSTITUTE AFTER NUTS ARE TIGHTENED.

SCALE: NONE
DRAWN: DRH
CHK:
APPVD:

CITY OF ST. HELENA

TEMPORARY BLOW-OFF WITH MAIN LINE VALVE

DATE: JUNE 19.

STD. NO. 112

SCALE: NONE

DRAWN: CKM

CHK: TMS

APPVD: MSO

CITY OF ST. HELENA

TEMPORARY BLOW-OFF WITH HARNESS

DATE: JUNE 1993

STD. NO. 113

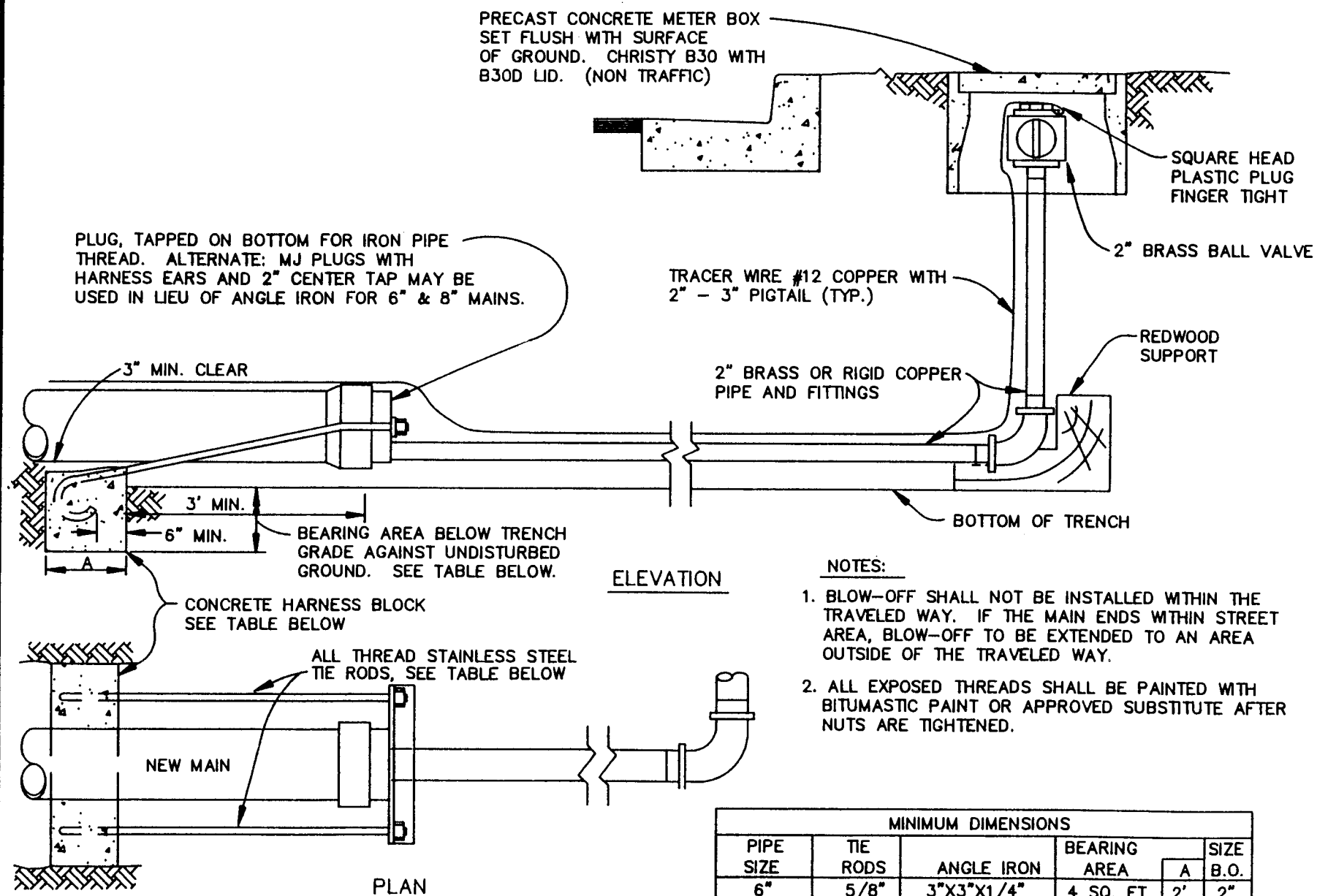

NOTES:

1. BLOW-OFF SHALL NOT BE INSTALLED WITHIN THE TRAVELED WAY. IF THE MAIN ENDS WITHIN STREET AREA, BLOW-OFF TO BE EXTENDED TO AN AREA OUTSIDE OF THE TRAVELED WAY.
2. ALL EXPOSED THREADS SHALL BE PAINTED WITH BITUMASTIC PAINT OR APPROVED SUBSTITUTE AFTER NUTS ARE TIGHTENED.

MINIMUM DIMENSIONS					
PIPE SIZE	TIE RODS	ANGLE IRON	BEARING AREA	A	SIZE B.O.
6"	5/8"	3"X3"X1/4"	4 SQ. FT.	2'	2"
8"	3/4"	3-1/2"X3"X1/4"	7 SQ. FT.	3'	2"
12"	1-1/8"	4"X3"X1/2"	16 SQ. FT.	3'	2"
OVER 12"	BY THE DESIGN ENGINEER				

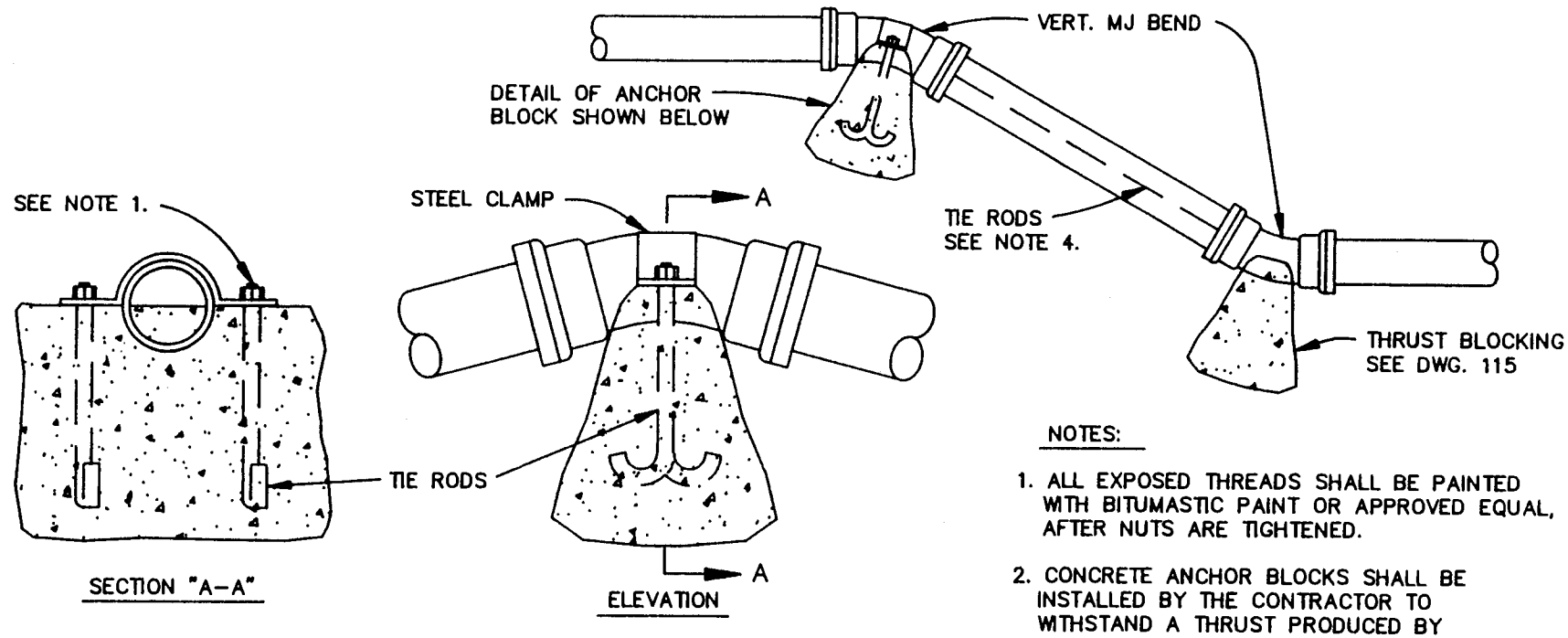

TYPICAL CONCRETE ANCHOR BLOCK FOR VERTICAL BEND

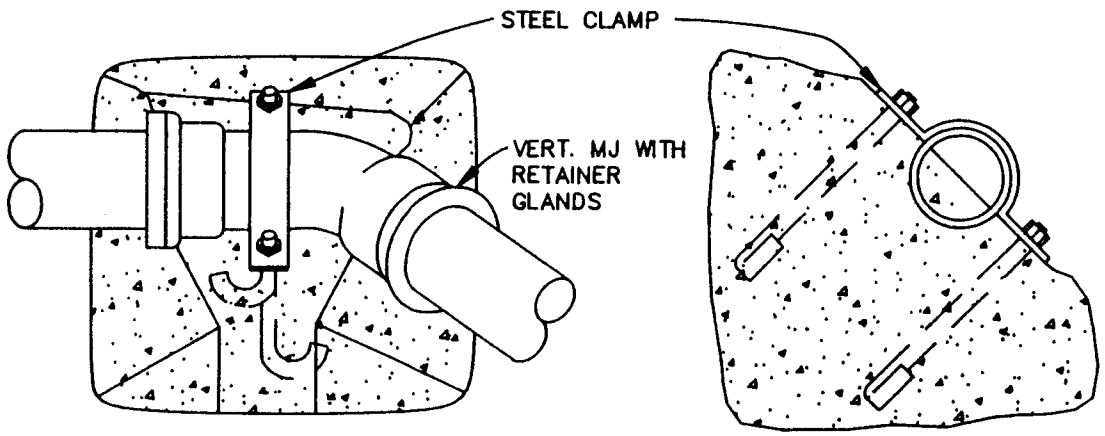

TYPICAL CONCRETE BLOCK FOR COMBINATION HORIZONTAL-VERTICAL BEND

NOTES:

1. ALL EXPOSED THREADS SHALL BE PAINTED WITH BITUMASTIC PAINT OR APPROVED EQUAL, AFTER NUTS ARE TIGHTENED.
2. CONCRETE ANCHOR BLOCKS SHALL BE INSTALLED BY THE CONTRACTOR TO WITHSTAND A THRUST PRODUCED BY THE TEST PRESSURE PLUS 50 P.S.I. MINIMUM DIMENSIONS FOR THE RODS AND CLAMPS ARE LISTED IN THE TABLE BELOW.
3. USE MECHANICAL JOINT RETAINER GLANDS AT ALL FITTINGS.
4. FOR PVC PIPE, TIE RODS, ALL THREAD STAINLESS, SHALL BE INSTALLED BETWEEN FITTINGS (MIN. 2 REQD.). MAY BE USED IN LIEU OF RETAINING GLANDS.
5. STEEL CLAMPS TO BE HOT-DIPPED GALVANIZED.

PIPE SIZE	TIE RODS	STEEL CLAMPS
6"	5/8"	3" X 1/4"
8"	3/4"	3-1/4" X 1/4"
10"-12"	1-1/8"	4" X 1/2"
14"	1-1/4"	4" X 1/2"
16"-18"	1-3/8"	X 1/2"

SCALE: NONE
DRAWN: CKM
CHK: TMS
APPVD: MSO

CITY OF ST. HELENA

CONCRETE ANCHOR BLOCKS FOR VERTICAL BENDS

DATE: JUNE 19

STD. NO. 114

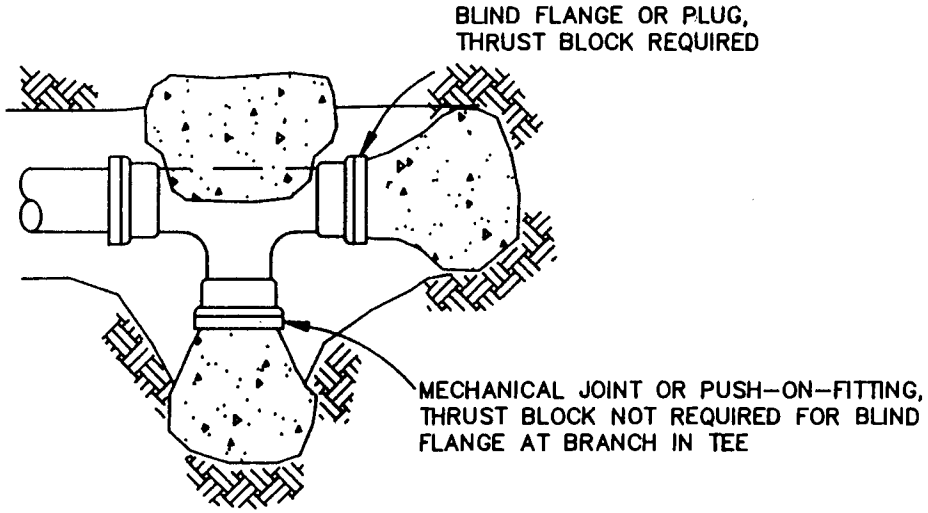

DEAD-END TEE

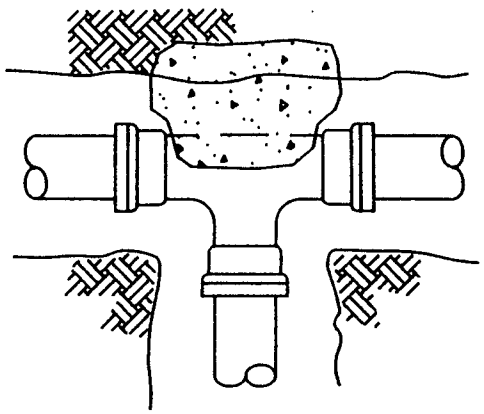

TEE

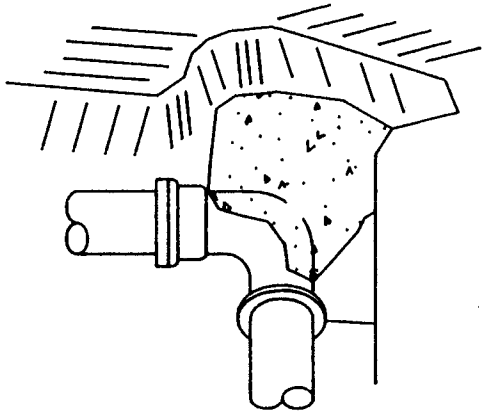

BEND

TYPICAL CONCRETE BLOCKING
SHOWN IN PERSPECTIVE

NOTES:

1. SAFE BEARING LOAD OF SOIL FOR HORIZONTAL THRUST SHALL NOT BE EXCEEDED.
2. CONCRETE BLOCKING, CAST IN PLACE, TO EXTEND FROM BELLS OF FITTINGS TO UNDISTURBED SOIL AND ENTIRE BEARING AREA MUST BE AGAINST UNDISTURBED SOIL.
3. IN USING THE THRUST BLOCKING TABLE BELOW, ASSUME 2000 P.S.F. BEARING CAPACITY UNLESS OTHERWISE SHOWN ON THE PLANS. THE DESIGN ENGINEER SHALL SPECIFY THRUST BLOCKING REQUIREMENTS FOR ALL OTHER SOIL BEARING CONDITIONS.
4. FOR PLUGGED LEG(S) OF TEE OR CROSS, USE HARNESS TYPE BLOCKING AS SHOWN ON STD. DWG. 112 AND CONCRETE BLOCKING INDICATED IN TABLE BELOW.
5. 6-SACK CONCRETE REQUIRED.

MIN. REQ'D. BEARING AREA IN SQ. FT. PER 100 P.S.I. TEST PRESSURE *						
PIPE SIZE	SOIL BEARING CAPACITY	HARNESS BLOCKS	TEES & DEAD ENDS	90° BENDS	45° BENDS	22-1/2" BENDS
6"	1000 2000	4 2	4 2	6 3	3 2	2 1
8"	1000 2000	7 4	7 4	10 5	5 3	3 2
12"	1000 2000	16 8	16 8	22 11	12 6	6 3
14"	1000 2000	22 11	22 11	30 15	16 8	18 4
16"	1000 2000	28 14	28 14	42 21	21 14	14 7

SCALE: NONE
DRAWN: CKM
CHK: TMS
APPVD: MSO

CITY OF ST. HELENA

CONCRETE THRUST BLOCKING

DATE: JUNE 1993

STD. NO. 115

NOTE:

ALL EXPOSED THREADS SHALL BE PAINTED WITH BITUMASTIC PAINT OR APPROVED SUBSTITUTE, AFTER NUTS ARE TIGHTENED.

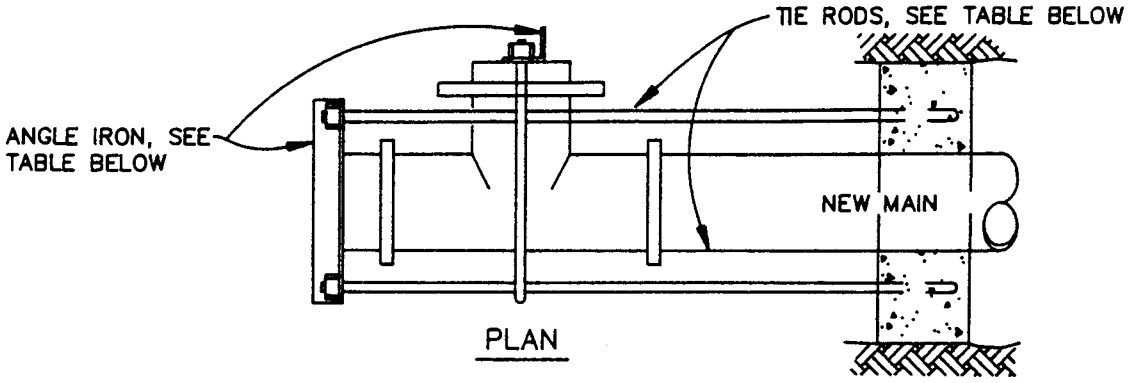

PLAN

CONCRETE SHALL EXTEND AT LEAST TO THE UNDISTURBED EARTH AT BOTH SIDES OF THE TRENCH

PLUGS FOR MAINS 12" AND LARGER SHALL BE TAPPED OFF CENTER AND HELD WITH ANGLE IRON, AS SHOWN. PLUGS WITH EARS AND CENTER TAP MAY BE USED FOR 6" AND 8" MAINS.

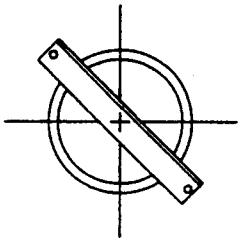

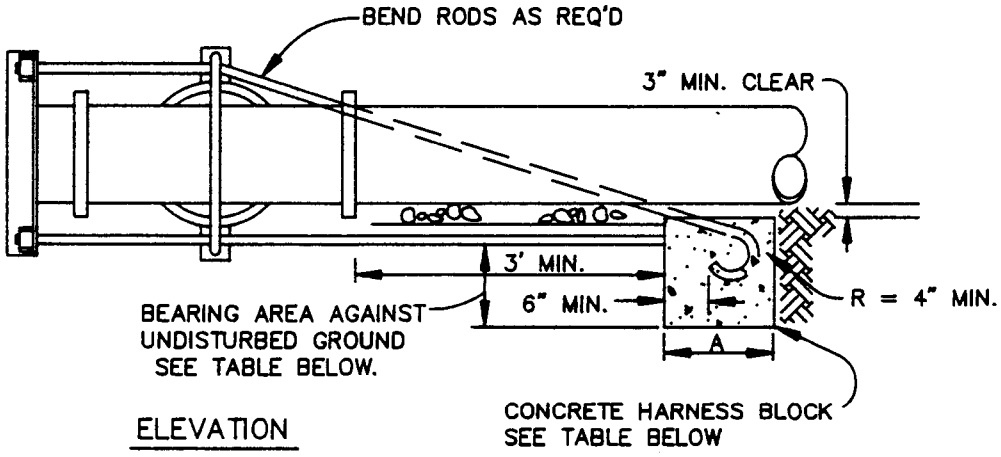

ELEVATION

TYPICAL FITTING HARNESS

MINIMUM DIMENSIONS				
PIPE SIZE	TIE RODS	ANGLE IRON	HARNESS BLOCK *	A
6"	5/8"	3"X3"X1/4"	4 SQ. FT.	2'
8"	3/4"	3-1/2"X3"X1/4"	7 SQ. FT.	3'
12"	1-1/8"	4"X3"X1/2"	16 SQ. FT.	3'
OVER 12"	BY THE DESIGN ENGINEER			

* BEARING AREA BELOW GRADE OF PIPE AGAINST UNDISTURBED GROUND

SCALE: NONE	CITY OF ST. HELENA	DATE: JUNE 19[illegible]
DRAWN: CKM	TYPICAL HARNESS INSTALLATION	STD. NO.
CHK: TMS		116
APPVD: MSO		

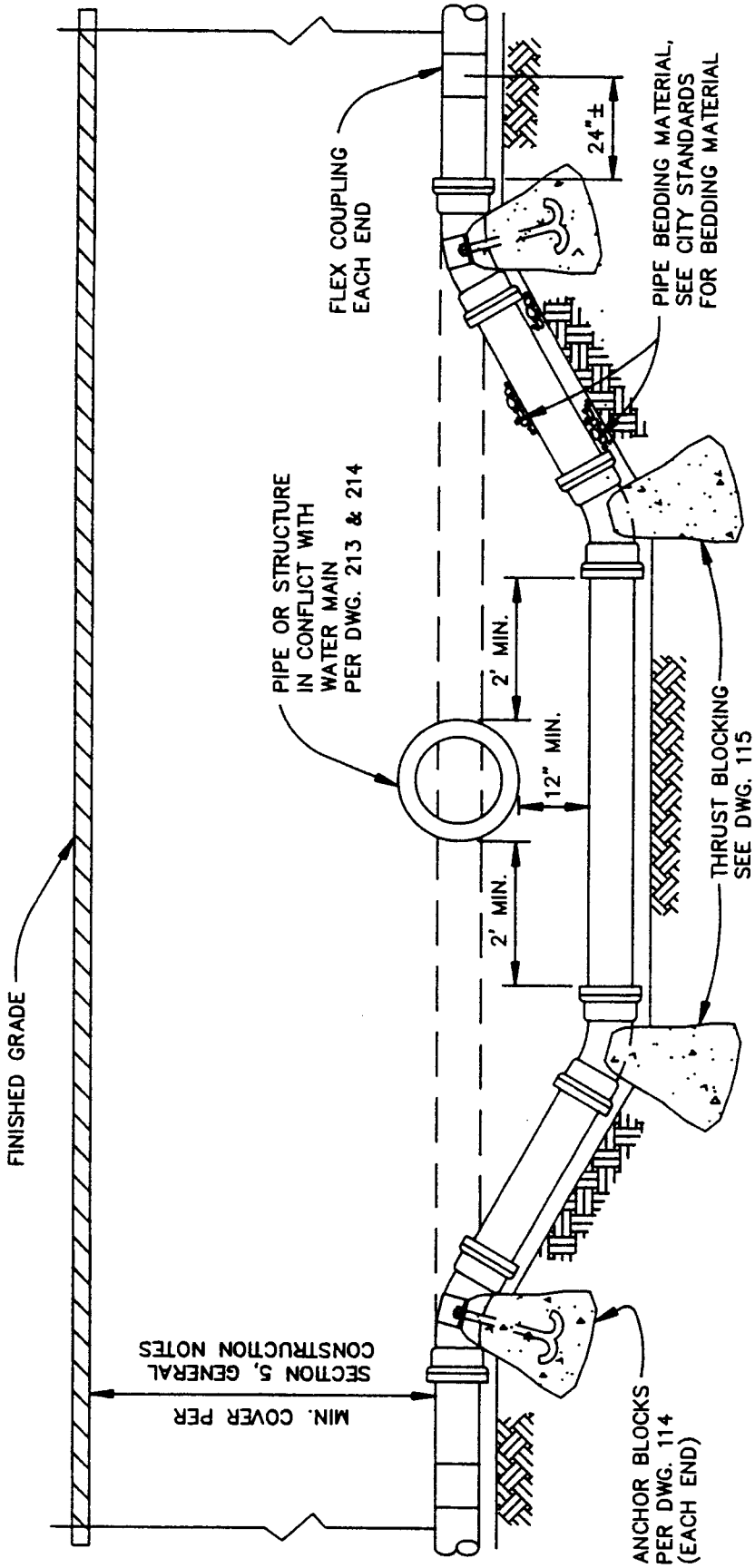

NOTES:

1. ALL PIPE AND FITTINGS SHALL BE DUCTILE IRON AND SHALL BE WRAPPED IN POLYETHYLENE PER CITY STANDARD CONSTRUCTION SPECIFICATIONS
2. ONLY MECHANICAL JOINT FITTINGS WITH RETAINER GLANDS OR FLANGED FITTINGS MAY BE USED
3. ALL BENDS SHALL BE 45° OR 22-1/2° FITTINGS

SCALE: NONE	**CITY OF ST. HELENA**	DATE: JUNE 1993
DRAWN: CKM	TYPICAL WATER MAIN LOWERING DETAIL	STD. NO.
CHK: TMS		117
APPVD: MSO		

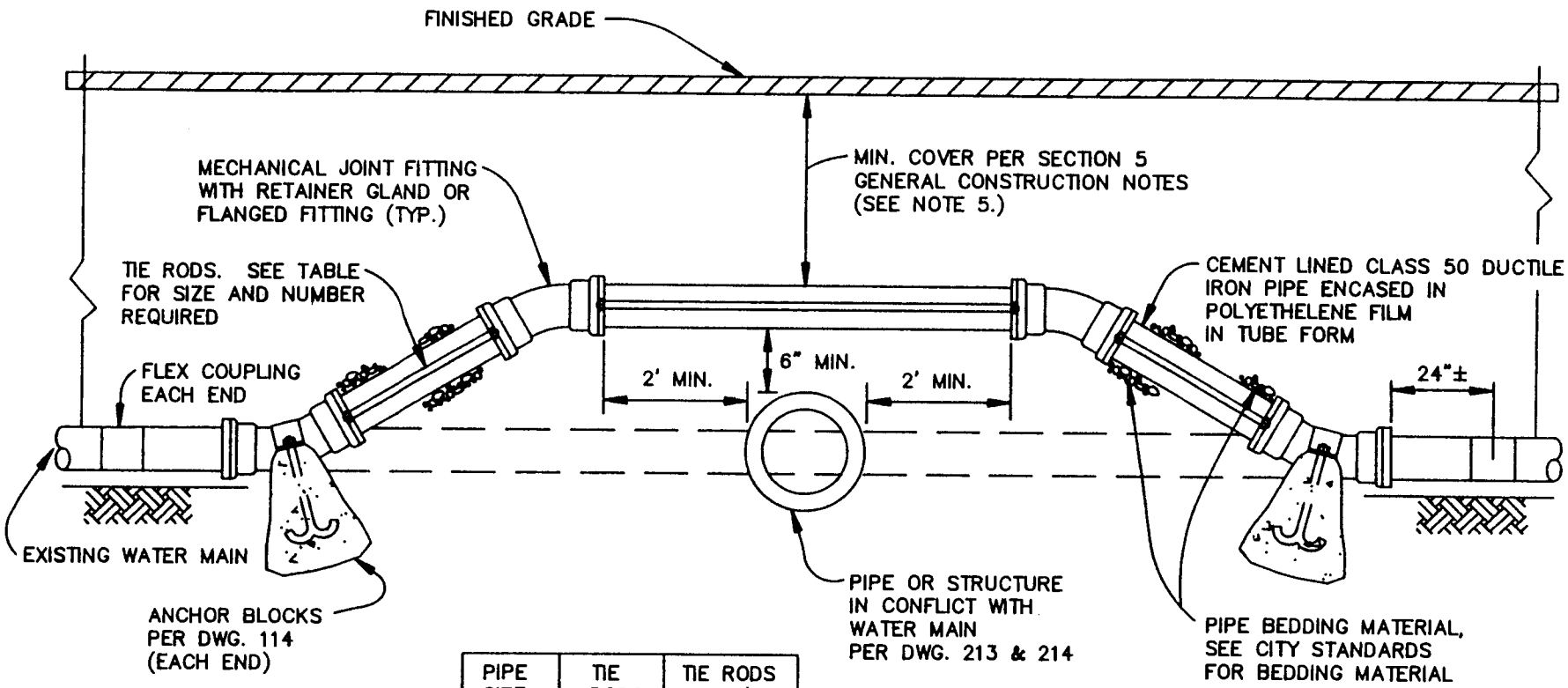

PIPE SIZE	TIE RODS	TIE RODS REQ'D
6"	3/4"	2
8"	3/4"	2
12"	3/4"	4

NOTES:

1. ALL PIPE AND FITTINGS SHALL BE DUCTILE IRON AND SHALL BE WRAPPED IN POLYETHYLENE PER STANDARD CONSTRUCTION SPECIFICATIONS.
2. ONLY MECHANICAL JOINT FITTINGS WITH RETAINER GLANDS OR FLANGED FITTINGS MAY BE USED.
3. ALL BENDS SHALL BE 45° OR 22-1/2° FITTINGS.
4. TO BE USED ONLY WITH APPROVAL OF CITY ENGINEER.
5. CLASS 52 DUCTILE IRON REQUIRED WHERE COVER IS LESS THAN THAT REQUIRED BY THE GENERAL CONSTRUCTION NOTES.

SCALE: NONE
DRAWN: CKM
CHK: TMS
APPVD: MSO

CITY OF ST. HELENA

TYPICAL WATER MAIN
INSTALLATION OVER STRUCTURE

DATE: JUNE 19[illegible]

STD. NO.
118

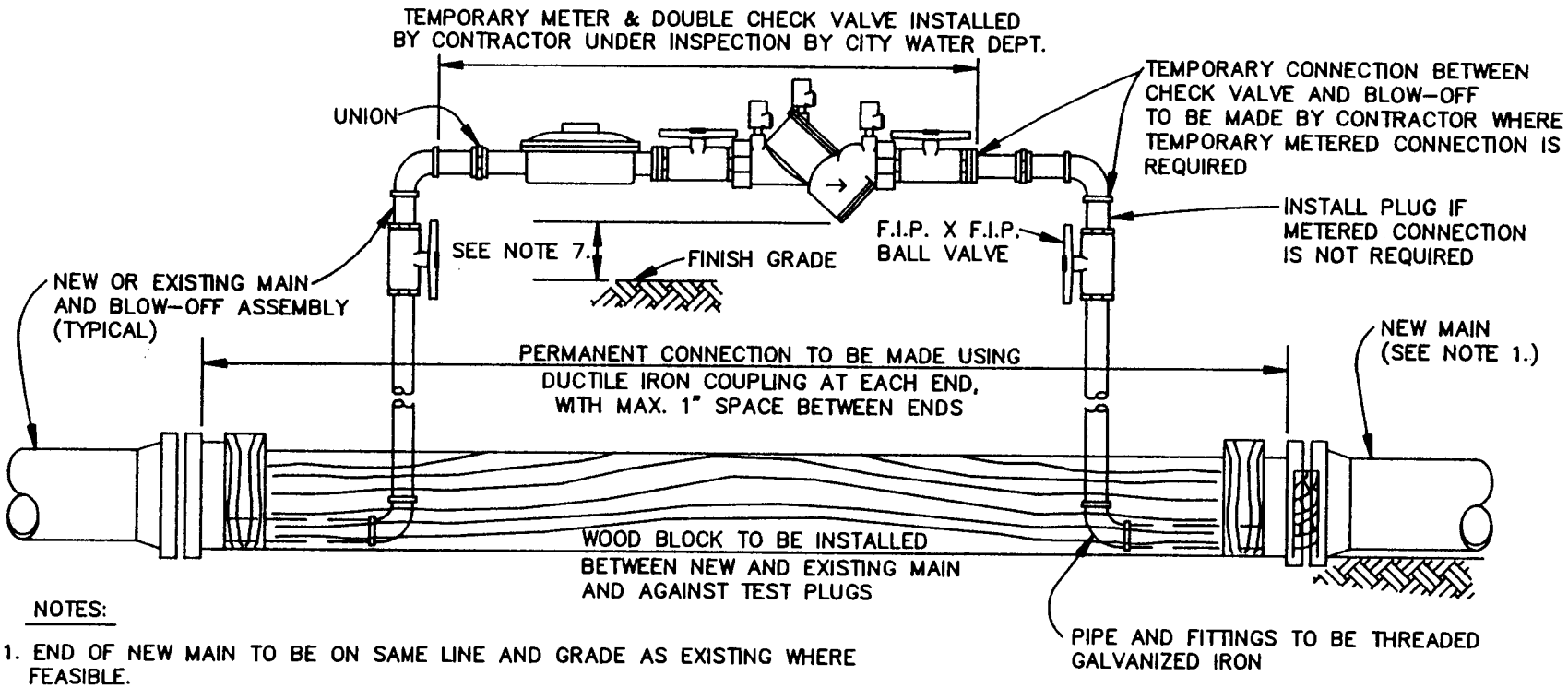

ELEVATION

NOTES:

1. END OF NEW MAIN TO BE ON SAME LINE AND GRADE AS EXISTING WHERE FEASIBLE.
2. WOOD BLOCKING TO BE FOR THRUST PRODUCED BY TEST PRESSURE PLUS 50 P.S.I.
3. SAFE BEARING LOAD OF SOIL FOR HORIZONTAL THRUST SHALL NOT BE EXCEEDED.
4. SEE DWG. 113 FOR BLOW-OFF SIZE CHART. ("BLOW-OFF" IS PIPE AND FITTINGS, UP TO AND INCLUDING VALVE.)
5. THE CONTRACTOR SHALL MAKE FINAL TIE-INS AT THE DEVELOPERS EXPENSE UNDER THE INSPECTION OF CITY WATER DEPARTMENT.
6. SHOULD THE BLOW-OFF ON THE EXISTING MAIN BE LOCATED OUT OF THE TRAVELED WAY AS INDICATED ON DWG. 113, THE TEMPORARY BLOW-OFF PIPING SHALL BE EXTENDED OUT OF THE TRAVELED WAY; AND THE RISERS, METER, AND CHECK VALVE WILL BE INSTALLED OUT OF TRAVELED WAY.
7. CLEARANCE TO BE 6" ABOVE INUNDATION LEVEL OR 12" MIN. ABOVE FINISH GRADE.
8. TWO INCH TEMPORARY CONSTRUCTION METER ACCEPTIBLE UNTIL COMBUSTIBLE MATERIALS STORED ON SITE OR CONSTRUCTION ABOVE GRADE BEGINS.

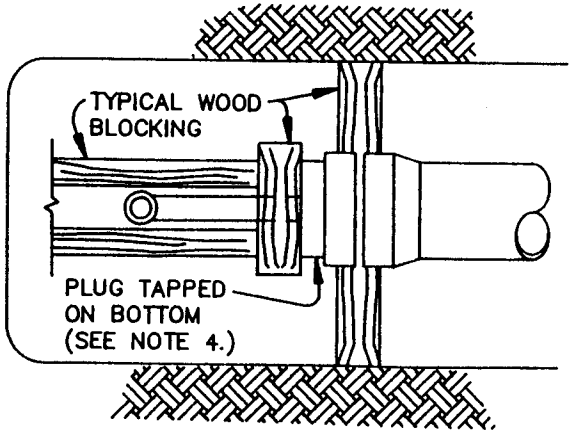

PLAN

SCALE: NONE	CITY OF ST. HELENA
DRAWN: CKM	TYPICAL TEMPORARY BLOW-OFF AND/OR METERED CONNECTION - MAINS UNDER CONSTRUCTION
CHK: TMS	
APPVD: MSO	
DATE: JUNE 1993	STD. NO. 119

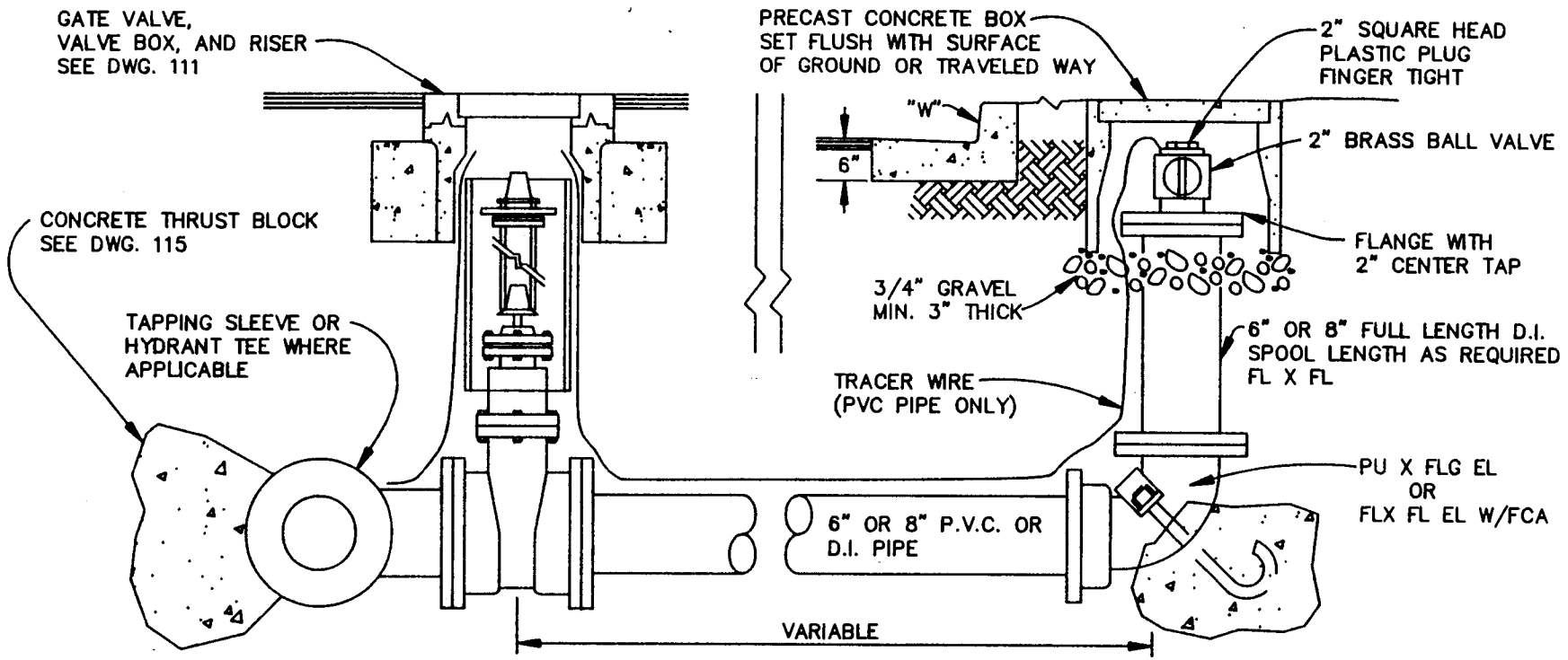

NOTES:

1. SEE SECTION 5, GENERAL CONSTRUCTION NOTES.
2. ALL EXPOSED THREADS SHALL BE PAINTED WITH BITUMASTIC PAINT OR APPROVED SUBSTITUTE, AFTER NUTS ARE TIGHTENED. DIP TO BE WRAPPED WITH 8 MIL POLYETHYLENE AND SECURED W/TAPE.
3. BOX SHALL BE CHRISTY B40 WITH B40-61G LID OR EQUAL.

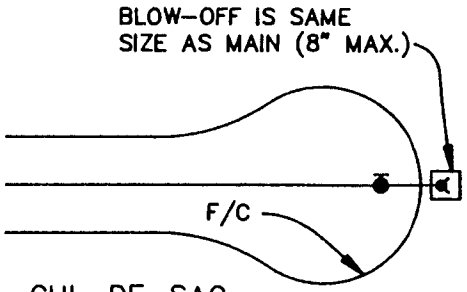

CUL-DE-SAC

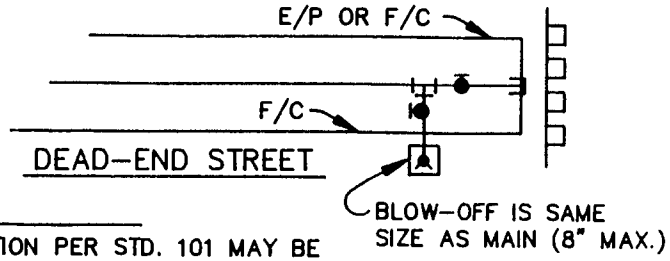

DEAD-END STREET

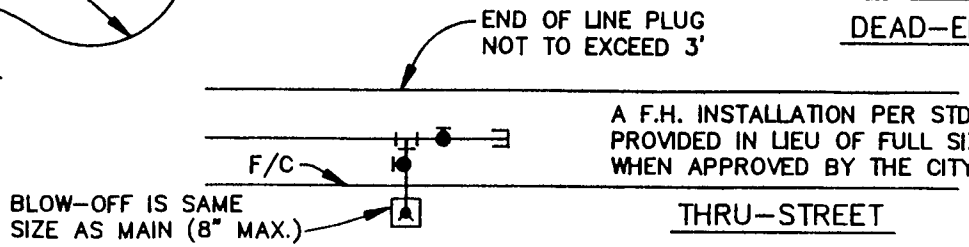

A F.H. INSTALLATION PER STD. 101 MAY BE PROVIDED IN LIEU OF FULL SIZE BLOW-OFF WHEN APPROVED BY THE CITY ENGINEER

THRU-STREET

SCALE: NONE
DRAWN: CKM
CHK: TMS
APPVD: MSO

CITY OF ST. HELENA

6" AND 8" BLOW-OFF

DATE: JUNE 1995

STD. NO. 120

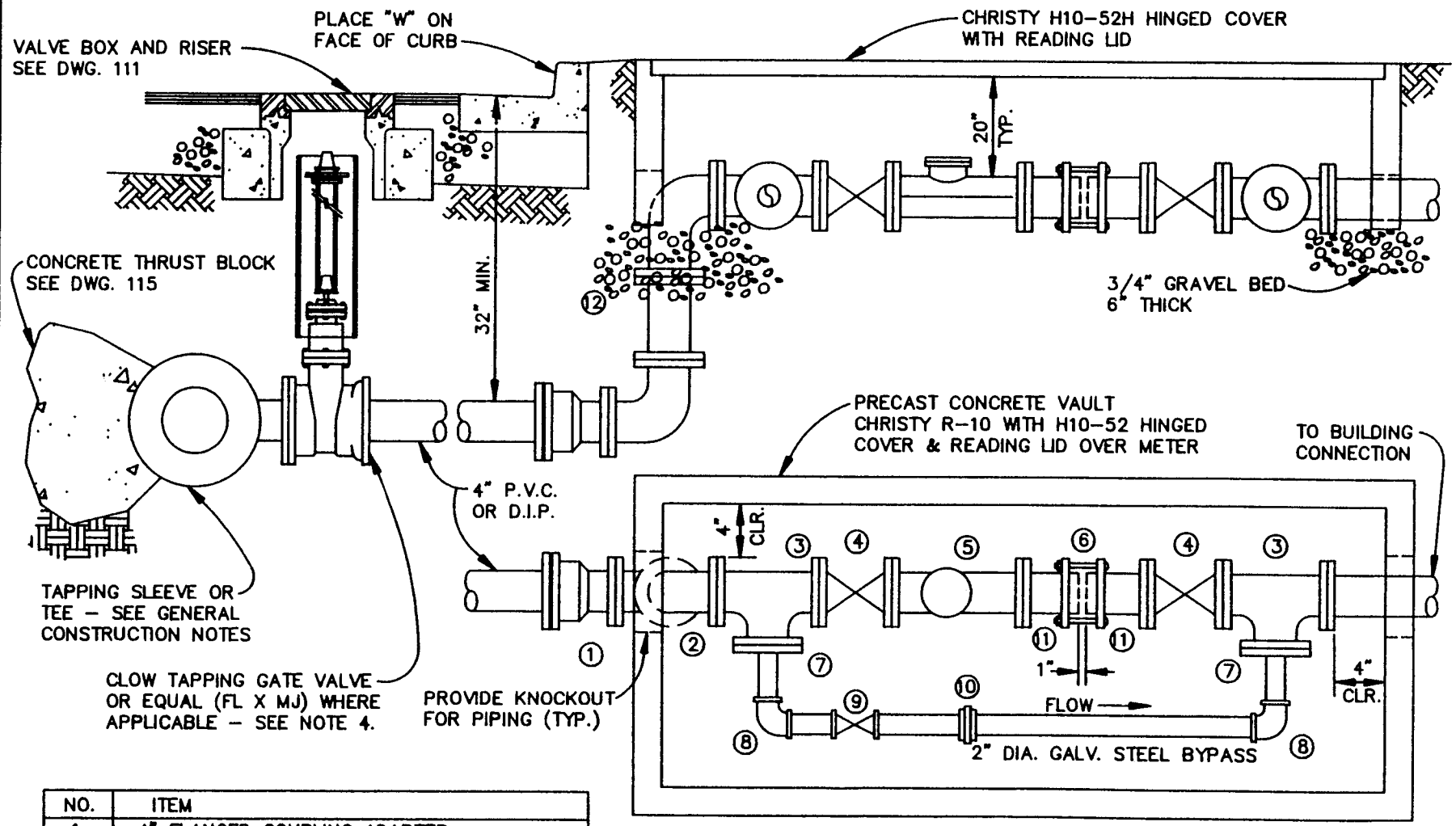

NO.	ITEM
1	4" FLANGED COUPLING ADAPTER
2	4" FLANGED 90° ELBOW - SEE DWG. 114
3	4" X 4" FLANGED TEE
4	4" FLANGED GATE VALVE W/HANDWHEEL
5	4" FLANGED METER-BY CITY FORCES
6	4" ROCKWELL #411 COUPLING
7	4" BLIND FLANGE W/2" I.P. TAP
8	2" I.P. GALV. 90° ELBOW
9	2" THRD. BALL CORP. W/LOCK WING
10	2" UNION
11	4" FLG. X PE. D.I.P. SPOOL - 6" LONG
12	4" FLANGED SPOOL - LENGTH AS REQUIRED

NOTES:

1. CONTRACTOR TO INSTALL SCHEDULE 40 PVC PIPE SPACER WITH 1/2" DIA. HOLES ⊙ 2" O.C. (VERTICALLY DRILLED THRU PIPE).
2. PRECAST METER VAULT MUST BE SET SO THE STEEL COVER IS FLUSH WITH FINISHED SURFACE. COVER TO HAVE READING LID.
3. SEE GENERAL CONSTRUCTION NOTES.
4. GATE VALVES TO BE RESILIENT SEAT TYPE PER AWWA SPECIFICATION C509, SEE DWG. 111.
5. SEE GENERAL CONSTRUCTION NOTES FOR TAPPING SLEEVES, METER BOXES AND COVERS.

SCALE: NONE
DRAWN: DRH
CHK:
APPVD:

CITY OF ST. HELENA

4" WATER SERVICE
LATERAL INSTALLATION FOR 4" METER

DATE: JUNE 1993

STD. NO. 121

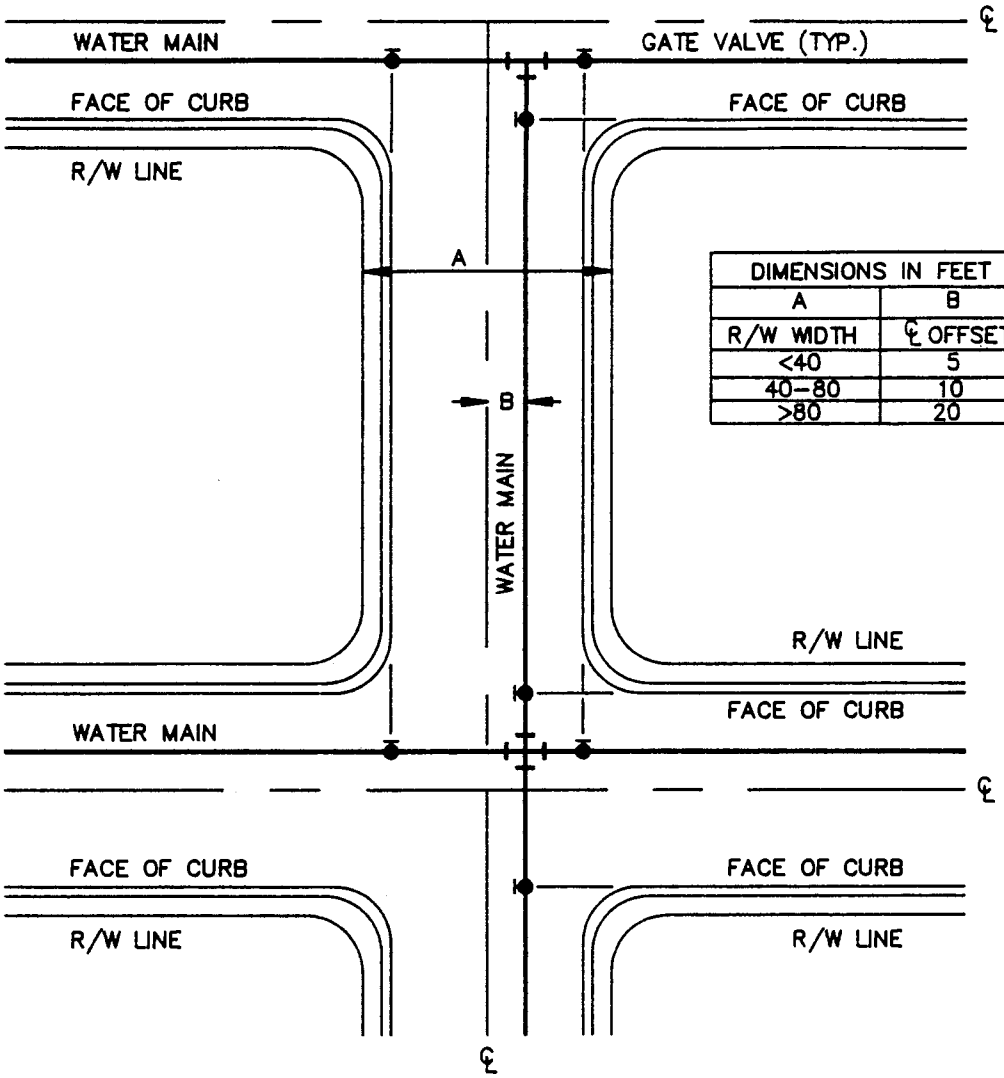

DIMENSIONS IN FEET	
A	B
R/W WIDTH	℄ OFFSET
<40	5
40–80	10
>80	20

NOTES:

1. WATER MAINS SHALL BE LOCATED PARALLEL TO STREET CENTERLINES AT THE OFFSET SHOWN ABOVE, UNLESS CONFLICTS WITH OTHER UNDERGROUND FACILITIES CANNOT BE AVOIDED. NON–STANDARD ALIGNMENTS SHALL BE APPROVED BY THE CITY ENGINEER PRIOR TO INSTALLATION.
2. MAINLINE VALVES, EXCEPT HYDRANT VALVES AND TAPPING VALVES, SHALL BE ON FACE OF CURB EXTENDED WHERE FEASIBLE.
3. A MINIMUM OF THREE (3) MAINLINE VALVES ARE REQUIRED FOR "T" INTERSECTIONS AND FOUR (4) VALVES ARE REQUIRED FOR CROSS INTERSECTIONS, UNLESS OTHERWISE APPROVED BY THE CITY ENGINEER.
4. MAINLINE VALVES SHALL BE REQUIRED TO ISOLATE FIRE HYDRANTS, BOTH PUBLIC AND PRIVATE, INTO SEPERATELY VALVED MAINLINE SECTIONS, AND SHALL HAVE A MAXIMUM SPACING OF 500 FEET.
5. VALVES WITHIN 50 FEET OF AN INTERSECTION MAY BE CONSIDERED INTERSECTION VALVES.
6. HOT–TAP VALVE IS NOT CONSIDERED TO BE A MAINLINE VALVE UNLESS APPROVED AS SUCH BY THE CITY ENGINEER. PROVIDE ISOLATION VALVES AT BOTH SIDES OF INSECTION OR ROAD SURFACE AT HIGHWAY CROSSINGS.

SCALE: NONE	CITY OF ST. HELENA	DATE: JUNE 1995
DRAWN: CKM	TYPICAL LOCATION OF WATER MAINS AND MAINLINE VALVES	STD. NO.
CHK: TMS		122
APPVD: MSO		

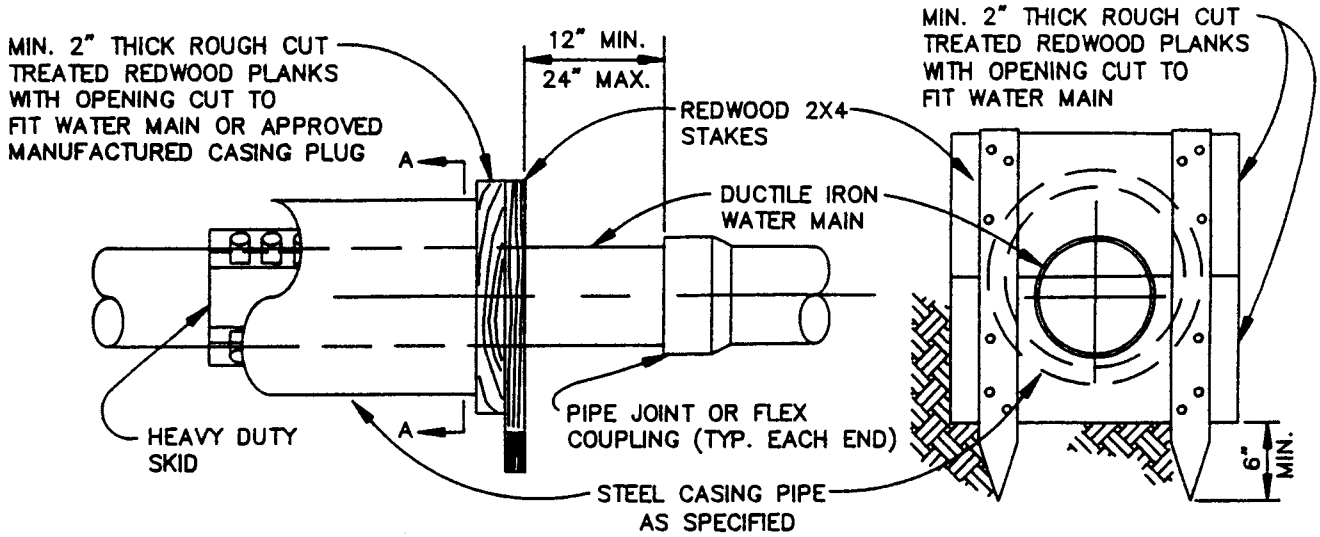

TYPICAL DIRT STOP DETAIL

NOTES:

1. INSTALL PER MANUFACTURER'S SPECIFICATIONS.
2. SEE GENERAL CONST. NOTES.
3. WHERE EXISTING CASING IS R.C.P., REDWOOD SKIDS MAY BE INSTALLED IN LIEU OF POLYETHYLENE SKIDS WITH CITY ENGINEER'S APPROVAL.

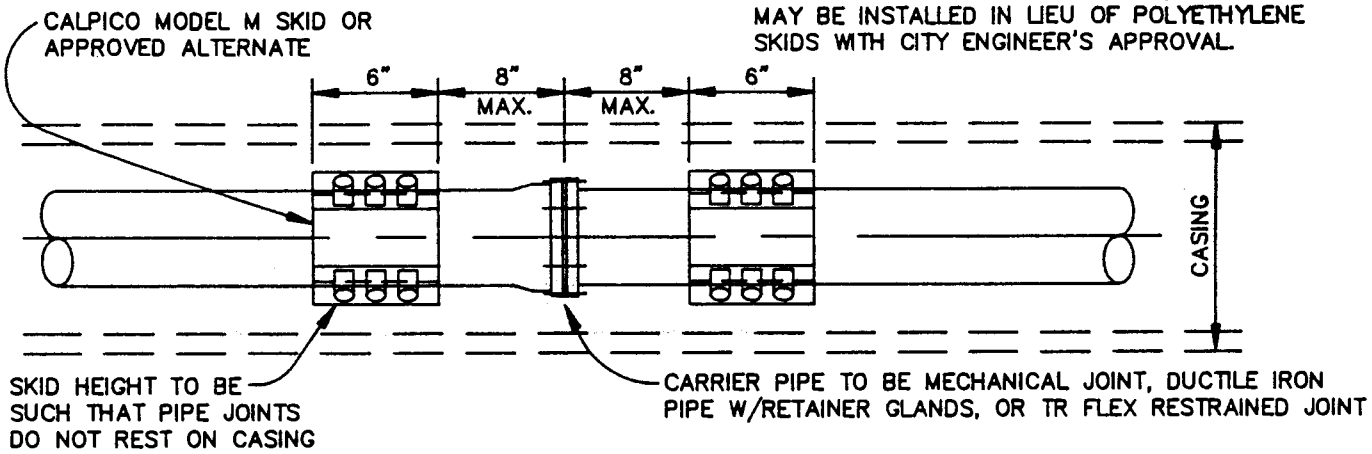

TYPICAL PIPE JOINT AND CASING DETAIL

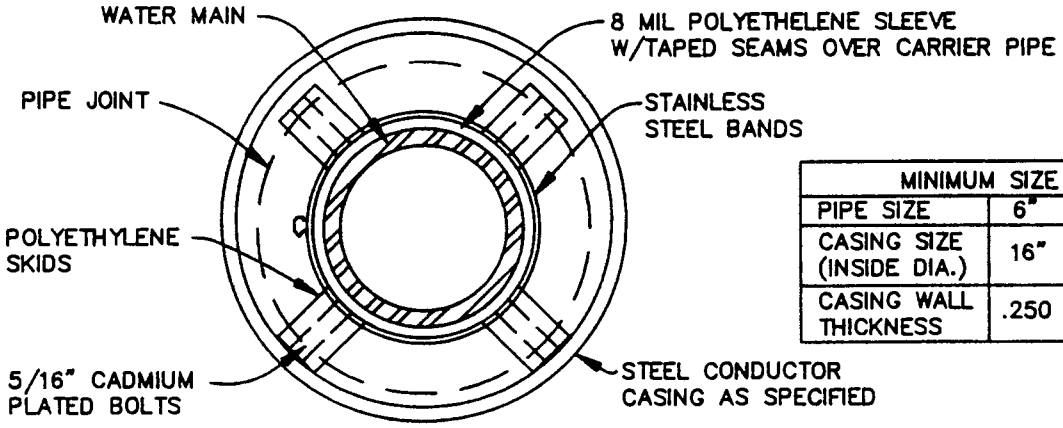

SECTION "A–A"

MINIMUM SIZE CASING REQUIRED					
PIPE SIZE	6"	8"	12"	14"	18"
CASING SIZE (INSIDE DIA.)	16"	16"	20"	24"	28"
CASING WALL THICKNESS	.250	.250	.250	.250	.375

SCALE: NONE	CITY OF ST. HELENA	DATE: JUNE 1993
DRAWN: CKM	TYPICAL DIRT STOP AND WATER MAIN ENCASEMENT	STD. NO.
CHK: TMS		123
APPVD: MSO		

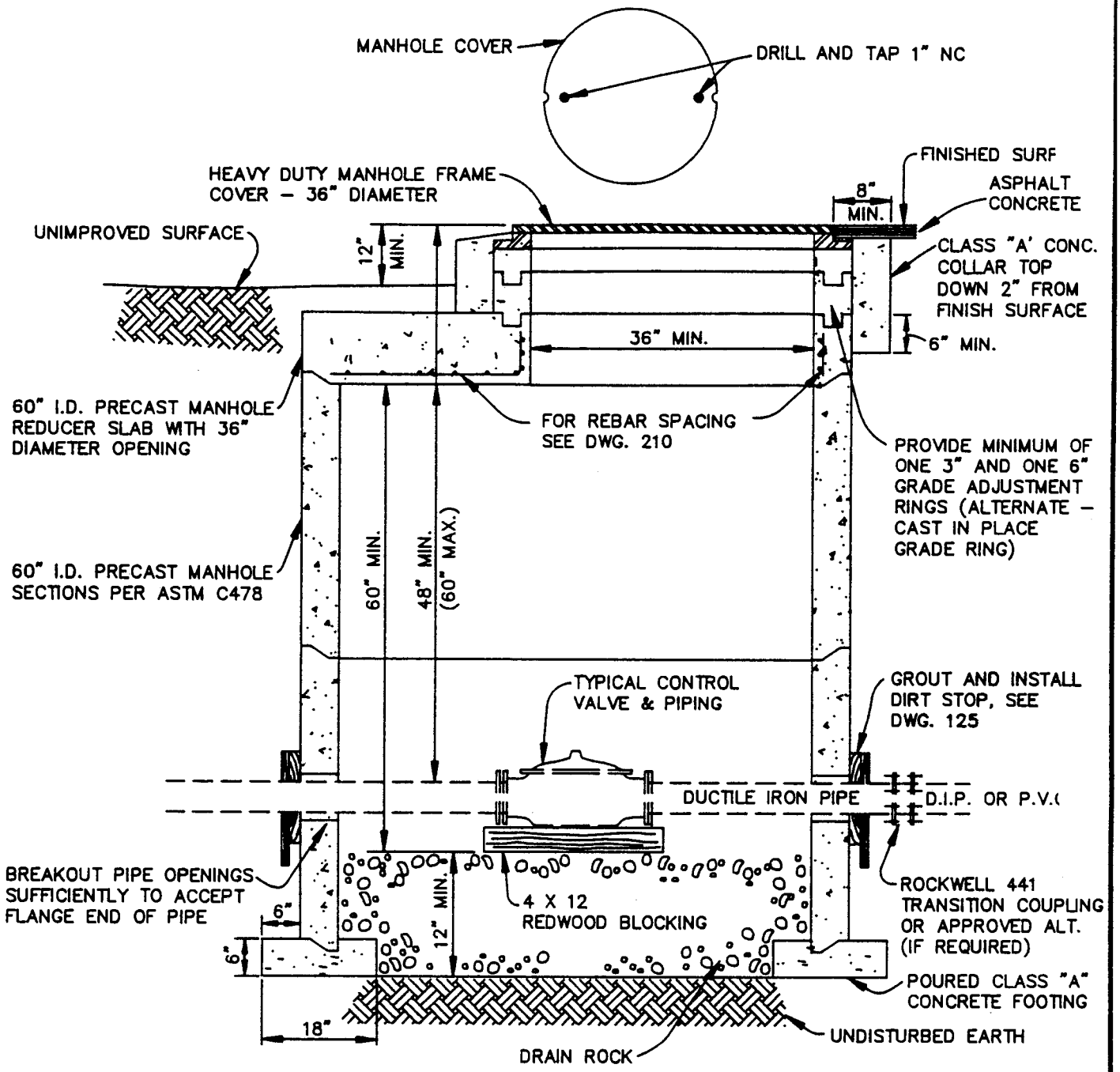

NOTES:

1. PRIOR APPROVAL OF THE USE OF THE MANHOLE–STYLE VAULT MUST BE OBTAINED FROM THE CITY ENGINEER FOR THE SPECIFIC SIZE AND MODEL VALVE OR APPURTENANCE TO BE INSTALLED.
2. THE MINIMUM MANHOLE I.D. SHALL BE 60".
3. ALL REDUCERS SHALL BE SLAB–STYLE. CONE–TYPE REDUCERS ARE NOT ACCEPTABLE.
4. ALL GATE VALVES SHALL BE INSTALLED ON EXTERIOR OF THE MANHOLE, PER DWG. 111.
5. SET ALL MANHOLE SECTION AND GRADE RINGS IN PLASTIC GASKET, RAM–NEK, OR APPROVED ALTERNATES.
6. WHERE POSSIBLE, INSTALL P.V.C. DRAIN PIPE FROM BASE OF MANHOLE TO DAYLIGHT OR TO STORM DRAIN.
7. SEE GENERAL CONSTRUCTION NOTES.
8. IN DESIGNATED FLOOD PLAIN AREAS, A WATERTIGHT MANHOLE SHALL BE INSTALLED WITH CONCRETE BASE.

SCALE: NONE	CITY OF ST. HELENA	DATE: JUNE 19[illegible]
DRAWN: DRH	TRAFFIC–TYPE PRECAST WATER UTILITY MANHOLE	STD. NO. 124
CHK:		
APPVD:		

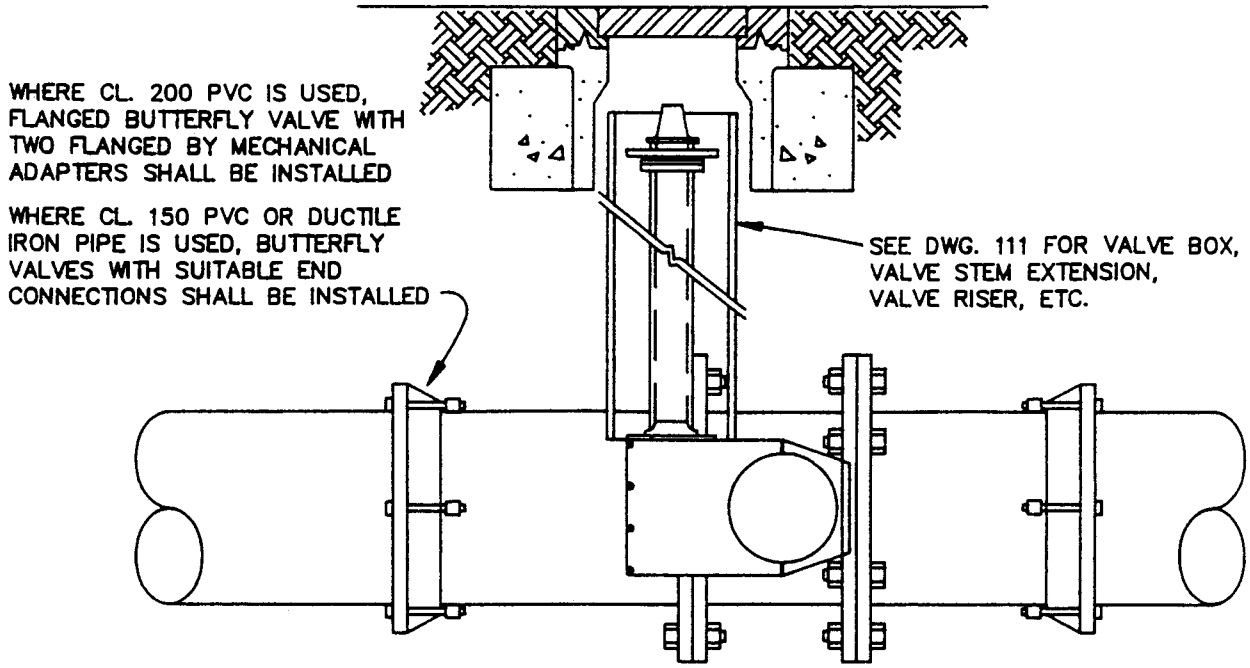

TYPICAL BUTTERFLY VALVE INSTALLATION

TO BE USED ON PIPE 12" AND LARGER

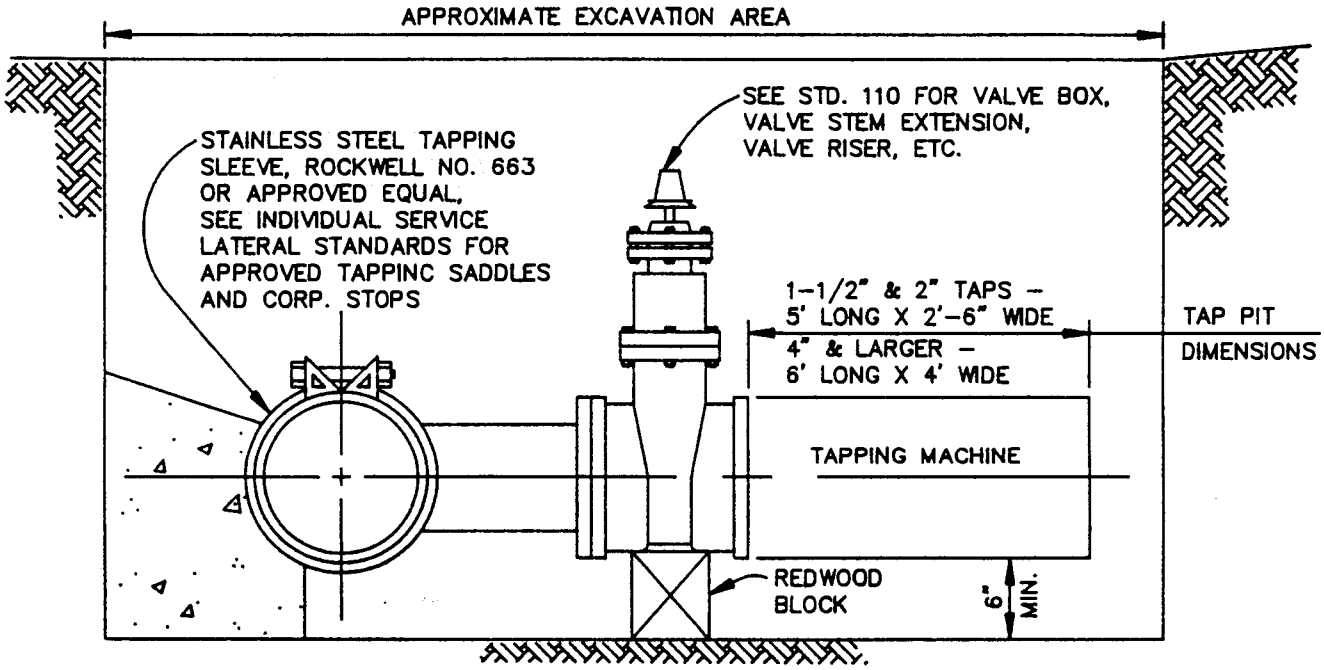

TYPICAL TAPPING SLEEVE & VALVE INSTALLATION

NOTES:

1. ALL EXTERNAL BOLTS AND NUTS ON VALVES SHALL BE 304 STAINLESS STEEL OR VALVE ASSEMBLY SHALL BE POLY-WRAPPED.
2. TAPS SHALL BE MADE BY CONTRACTOR UNDER CITY WATER DEPARTMENT INSPECTION.
3. ALL BUTTERFLY VALVES SHALL CONFORM TO CITY STANDARD SPECIFICATIONS.
4. AIR TEST TAPPING SLEEVES PRIOR TO DRILLING TAPS.

SCALE: NONE	**CITY OF ST. HELENA**	DATE: JUNE 1993
DRAWN: CKM	TYPICAL INSTALLATION OF BUTTERFLY VALVE & TAPPING VALVE	STD. NO.
CHK: TMS		125
APPVD: MSO		

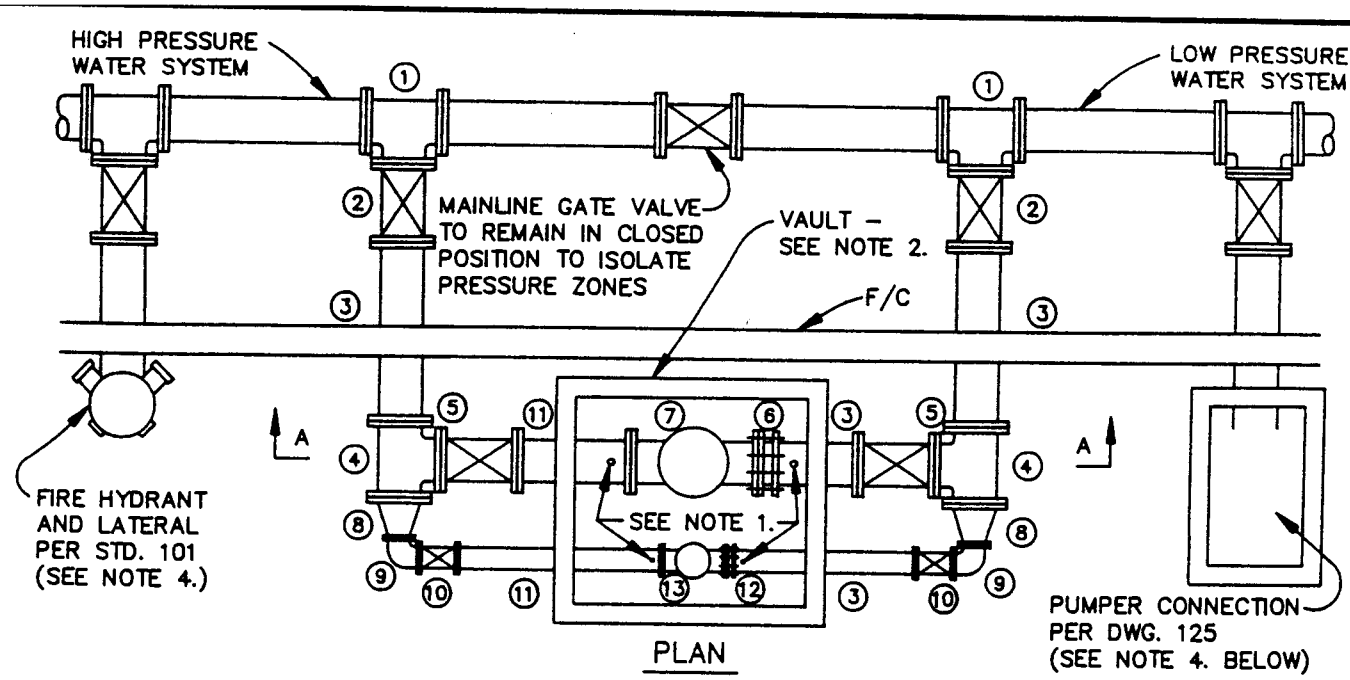

PLAN

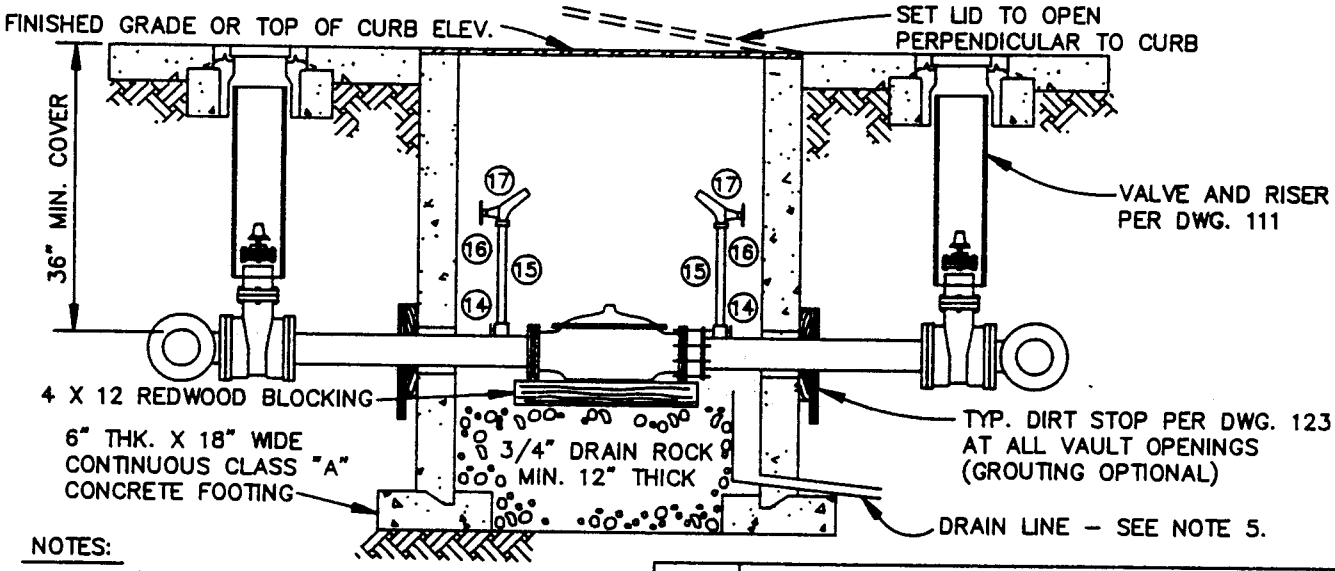

NOTES:

1. MAKE 3/4" TOP TAP – INSTALL RISER AS SHOWN FOR PRESSURE CHECKING.
2. THE PRECAST VAULT & PRESSURE REDUCING VALVES SHALL BE PER CITY ENGINEER'S APPROVAL.
3. THE LOW FLOW BY-PASS (PART #8-13) SHALL BE INSTALLED UNLESS OTHERWISE APPROVED BY THE CITY ENGINEER. IF A SINGLE P.R.V. IS INSTALLED, CENTER IN VAULT AND CHANGE PART NUMBER 4 TO 90° FLANGED ELL.
4. INSTALL FIRE HYDRANT AND PUMPER CONNECTION ONLY WHEN REQUIRED BY THE CITY.
5. RUN 2" SCHEDULE 40 P.V.C. DRAIN PIPE FROM A PERFORATED SUMP CANISTER TO AN EXISTING DRAINAGE SYSTEM TO DAYLIGHT.
6. VALVES 18" AND LARGER SHALL BE BUTTERFLY VALVES. VALVES 16" AND SMALLER SHALL BE RESILIENT WEDGE GATE VALVES.
7. SEE GENERAL CONSTRUCTION NOTES.
8. ALL PRESSURE REDUCING VALVES TO BE EPOXY FUSED COATED, INSIDE AND OUTSIDE.

NO.	ITEM
1	MECHANICAL JOINT TEE
2	MECHANICAL JOINT GATE VALVE
3	DUCTILE IRON PIPE – FL. X P.E.
4	FLANGED TEE
5	FLANGED GATE VALVE
6	FLANGED COUPLING ADAPTER
7	FLANGED P.R.V. – HIGH FLOW
8	FLANGED REDUCER
9	FLANGED 90° ELBOW
10	FLANGE GATE VALVE
11	DUCTILE IRON PIPE – FL. X FL.
12	FLANGED COUPLING ADAPTER
13	FLANGED P.R.V. – LOW FLOW
14	3/4" BALLCORP (FORD F8 1000)
15	3/4" TYPE "K" COPPER TUBING
16	3/4" COMP. X F.I.P. ADAPTER (FORD C14 – 33)
17	3/4" M.L.P. X HOSE BIBB – BRASS
18	3/4" M.L.P. TEE WITH TWO (2) 3/4" F.I.P. X H.B.

SCALE: NONE	CITY OF ST. HELENA	DATE: JUNE 199_
DRAWN: DRH	TYPICAL INSTALLATION OF PRESSURE REDUCING VALVES	STD. NO.
CHK:		126
APPVD:		

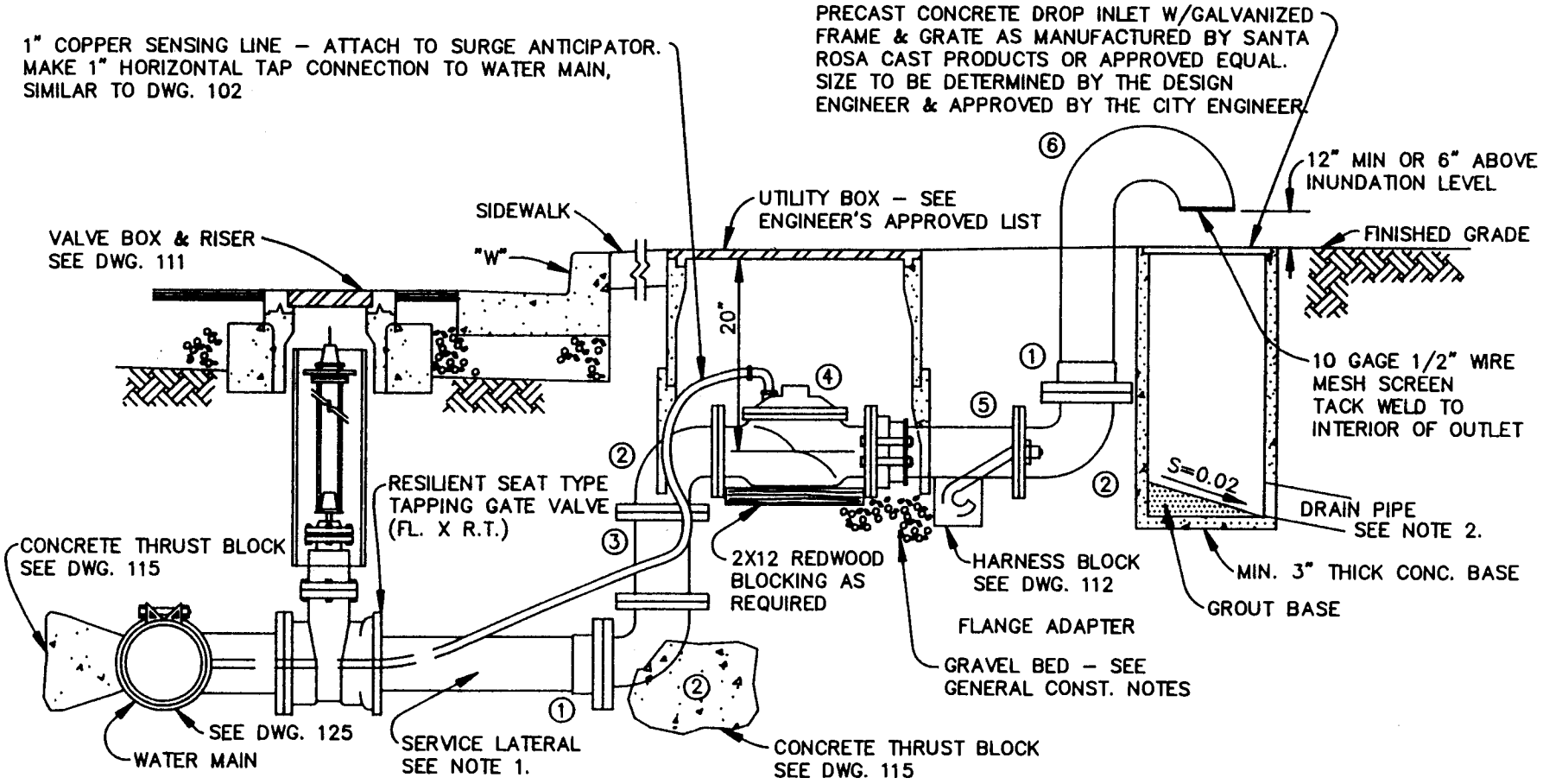

NOTES:

1. SERVICE LATERAL PIPE SHALL EITHER BE 4" DIAMETER OR EQUAL IN SIZE TO THE SURGE ANTICIPATOR VALVE, WHICHEVER IS GREATER. THE PIPE MATERIAL SHALL BE CL. 150 DUCTILE IRON, UNLESS OTHERWISE SHOWN ON THE PLANS. SHOULD THE SURGE ANTICIPATOR VALVE BE SMALLER THAN 4", INSTALL A FLANGED REDUCER AS REQUIRED ON THE INLET SIDE OF THE VALVE.
2. DISCHARGE WATER SHALL DRAIN EITHER TO AN EXISTING DRAINAGE SYSTEM OR TO DAYLIGHT. THE PROJECT ENGINEER SHALL SUBMIT HIS/HER DESIGN TO THE APPROPRIATE AGENCIES FOR APPROVAL.
3. ALL PIPING & FITTINGS ON THE DISCHARGE SIDE OF THE SURGE ANTICIPATOR VALVE SHALL BE EQUIVALENT IN SIZE TO THE VALVE.
4. DISCHARGE RISER SHALL BE FABRICATED FROM STANDARD WELDED STEEL PIPE. WELDING SHALL CONFORM TO AWWA STANDARD C206. THE RISER ASSEMBLY SHALL BE TAPE COATED PER AWWA STANDARD C209.
5. SEE GENERAL CONSTRUCTION NOTES.
6. SURGE ANTICIPATOR VALVE INSTALLATION IS SHOWN. PRESSURE RELIEF VALVE INSTALLATION IS SIMILAR EXCEPT NO SENSING LINE IS REQUIRED.

NO.	ITEM
1	FLANGE ADAPTER – SIZE AS REQUIRED
2	C.I. FL. 90° ELL – SIZE AS REQUIRED
3	D.I. FL. SPOOL – LENGTH AS REQUIRED
4	SURGE ANTICIPATOR VALVE – CLA MODEL 52-03 PRESSURE RELIEF VALVE – CLA MODEL 50G-01
5	FL. D.I.P. – LENGTH AS REQUIRED
6	FABRICATED WELDED STEEL DISCHARGE PIPE SEE NOTE 4.

SCALE: NONE
DRAWN: CKM
CHK: TMS
APPVD: MSO

CITY OF ST. HELENA

TYPICAL INSTALLATION OF SURGE ANTICIPATOR VALVE OR PRESSURE RELIEF VALVE

DATE: JUNE 1993

STD. NO. 127

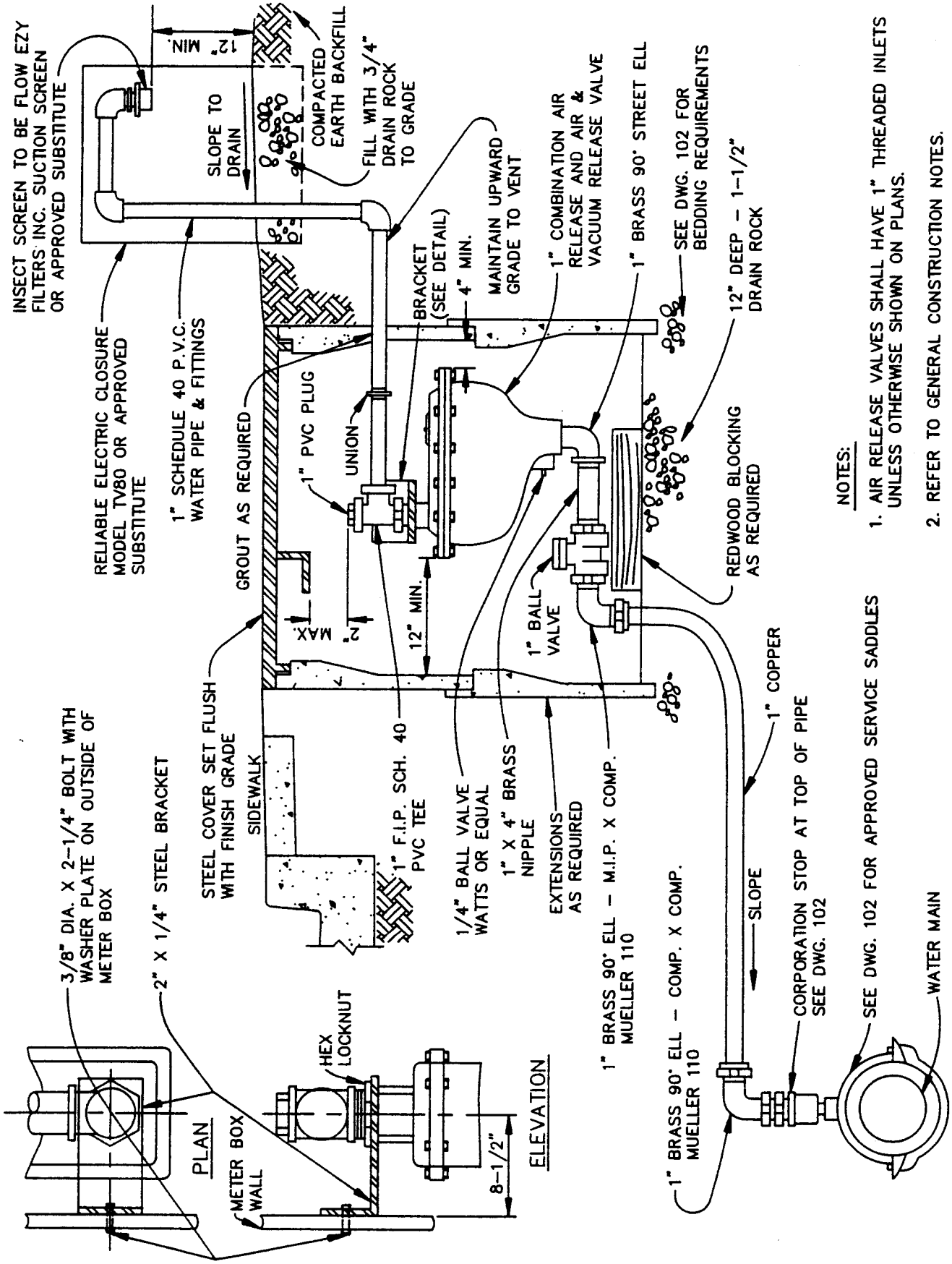

SCALE: NONE	CITY OF ST. HELENA	DATE: JUNE 1990
DRAWN: DRH	TYPICAL INSTALLATION OF AIR AND VACUUM & AIR RELEASE VALVE	STD. NO. 128
CHK:		
APPVD:		

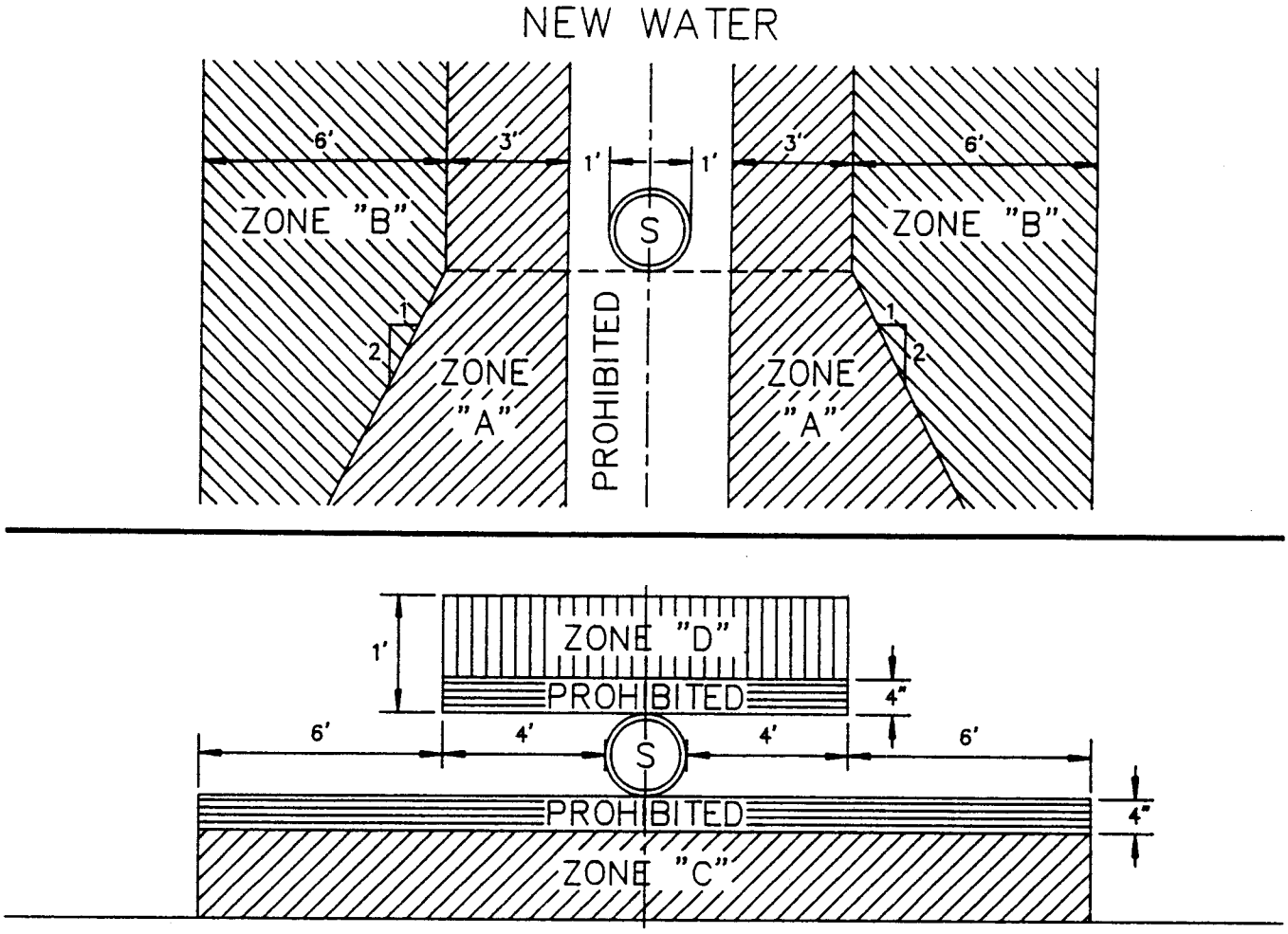

NEW WATER BEING CONSTRUCTED

ZONE

A NO WATER MAINS PARALLEL TO SEWERS SHALL BE CONSTRUCTED WITHOUT APPROVAL FROM THE CITY OF ST. HELENA

B IF THE SEWER PARALLELING THE WATER MAIN DOES NOT MEET THE SEWER ZONE "B", REQUIREMENTS, THE WATER MAIN SHALL BE CONSTRUCTED OF:
1 DUCTILE IRON PIPE WITH HOT DIP BITUMINOUS COATING.
2 DIPPED AND WRAPPED ONE-FOURTH-INCH-THICK WELDED STEEL PIPE.
3 CLASS 200 PRESSURE RATED PLASTIC WATER PIPE (DR 14 PER AWWA C900).
4 REINFORCED CONCRETE PRESSURE PIPE, STEEL CYLINDER TYPE (PER AWWA C300 OR C301 OR C303).

C IF THE SEWER CROSSING THE WATER MAIN DOES NOT MEET THE SEWER, ZONE "C", REQUIREMENTS, THE WATER MAIN SHALL HAVE NO JOINTS IN ZONE "C" AND BE CONSTRUCTED OF:
1 DUCTILE IRON PIPE WITH HOT DIP BITUMINOUS COATING.
2 DIPPED AND WRAPPED ONE-FOURTH-INCH-THICK WELDED STEEL PIPE.
3 CLASS 200 PRESSURE RATED PLASTIC WATER PIPE (DR 14 PER AWWA C900), OR EQUIVALENT.
4 REINFORCED CONCRETE PRESSURE PIPE, STEEL CYLINDER TYPE (PER AWWA C300 OR C301 OR C303).

D IF THE SEWER CROSSING THE WATER MAIN DOES NOT MEET THE REQUIREMENTS FOR SEWER, ZONE "D", THE WATER MAIN SHALL HAVE NO JOINTS WITHIN FOUR FEET FROM EITHER SIDE OF THE SEWER AND BE CONSTRUCTED OF:
1 DUCTILE IRON PIPE WITH HOT DIP BITUMINOUS COATING.
2 DIPPED AND WRAPPED ONE-FOURTH-INCH-THICK WELDED STEEL PIPE.
3 CLASS 200 PRESSURE RATED PLASTIC WATER PIPE (DR 14 PER AWWA C900), OR EQUIVALENT.
4 REINFORCED CONCRETE PRESSURE PIPE, STEEL CYLINDER TYPE (PER AWWA C300 OR C301 OR C303).

SCALE: NONE	**CITY OF ST. HELENA**	DATE: JUNE 1993
DRAWN: DRH	WATER SEPARATION REQUIREMENTS	STD. NO.
CHK:		129
APPVD:		

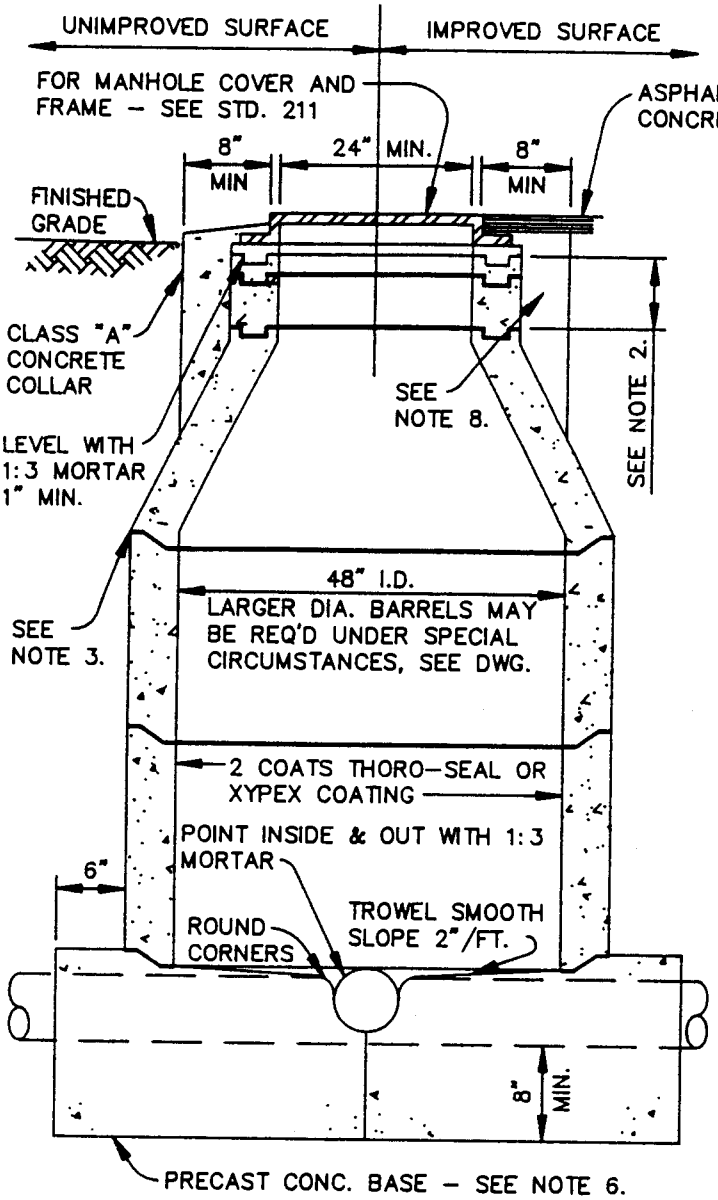

NOTES:

1. WHEN MANHOLES ARE INSTALLED IN UNIMPROVED AREAS, THE TOP OF THE COVER SHALL BE A MIN. OF 1 FOOT ABOVE ADJACENT FINISHED GRADE.
2. MIN. OF ONE 3" AND ONE 6" GRADE ADJUSTMENT RINGS. MAX. HEIGHT OF GRADE ADJUSTMENT RINGS = 20" ALTERNATELY, CONTRACTOR MAY CAST GRADE ADJUSTMENT RINGS IN PLACE.
3. SET ALL BARREL SECTIONS & TAPER SECTIONS IN PLASTIC GASKET, RAM-NEK OR APPROVED ALTERNATE. TYP. JOINT 1-1/2" (3/4" X 2-1/2") RAM-NEK SEAL (2 SEALS IN HIGH WATER TABLE AREAS).
4. CONE SECTION (TAPER) MUST BE CONCENTRIC FOR 48" MANHOLE UNLESS OTHERWISE SPECIFIED AND APPROVED BY THE CITY ENGINEER.
5. POURED-IN-PLACE MANHOLES ONLY ALLOWED WHERE TIEING INTO EXISTING SEWER. CONSTRUCT ALL FLOW CHANNELS OF PIPE WHEREVER POSSIBLE. AFTER LOWER RING SECTION IS SET, BREAK OUT TOP HALF OF PIPE FLUSH WITH INSIDE FACE OF M.H. WALL AND CONSTRUCT SHELF AND U-SHAPED CHANNEL. MAKE ELEVATION CHANGES GRADUALLY AND DIRECTIONAL CHANGES WITH SMOOTH CURVES.
6. POURED-IN-PLACE BASE SHALL BE POURED FULL THICKNESS TO UNDISTURBED SIDES OF EXCAVATION OR SHALL BE FORMED. PRECAST BASE TO BE USED ON ALL NEW SYSTEMS AND PLACED ON 12" THICK 3/4" DRAIN ROCK SUBBASE INSTALLED AGAINST UNDISTURBED EARTH.
7. JOINT BETWEEN BASE AND BARREL TO BE SEALED W/1-1/2" (3/4" X 2-1/2") RAM-NEK SEAL (2 SEALS IN HIGH WATER TABLE AREAS), OR PLASTER 6" FILLET, 1:3 MORTAR.
8. CLASS "A" CONCRETE COLLAR SHALL BE 2" BELOW FINISHED GRADE.
9. STANDARD MANHOLE BARREL SECTION PER ASTM C478.
10. 48" I.D. MANHOLE TO BE USED FOR SEWER MAINS LESS THAN 18" DIAMETER AND LESS THAN 8 FEET DEEP FROM FINISHED GRADE.

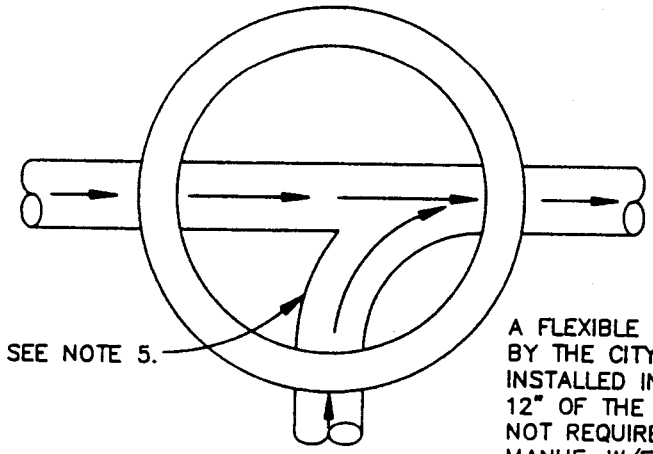

MANHOLE BASE
CHANNELIZATION PLAN

A FLEXIBLE COUPLING, AS APPROVED BY THE CITY ENGINEER, SHALL BE INSTALLED IN THE SEWER MAIN WITHIN 12" OF THE BASE OF THE MANHOLE (TYP). NOT REQUIRED WHEN PRECAST BASES ARE MANUF. W/FLEX CPLGS. ALREADY INSTALLED

SCALE: NONE	CITY OF ST. HELENA	DATE: JUNE 1993
DRAWN: CKM	STANDARD 48" DIA. PRECAST CONCRETE MANHOLE SANITARY SEWER	STD. NO.
CHK: TMS		201
APPVD: MSO		

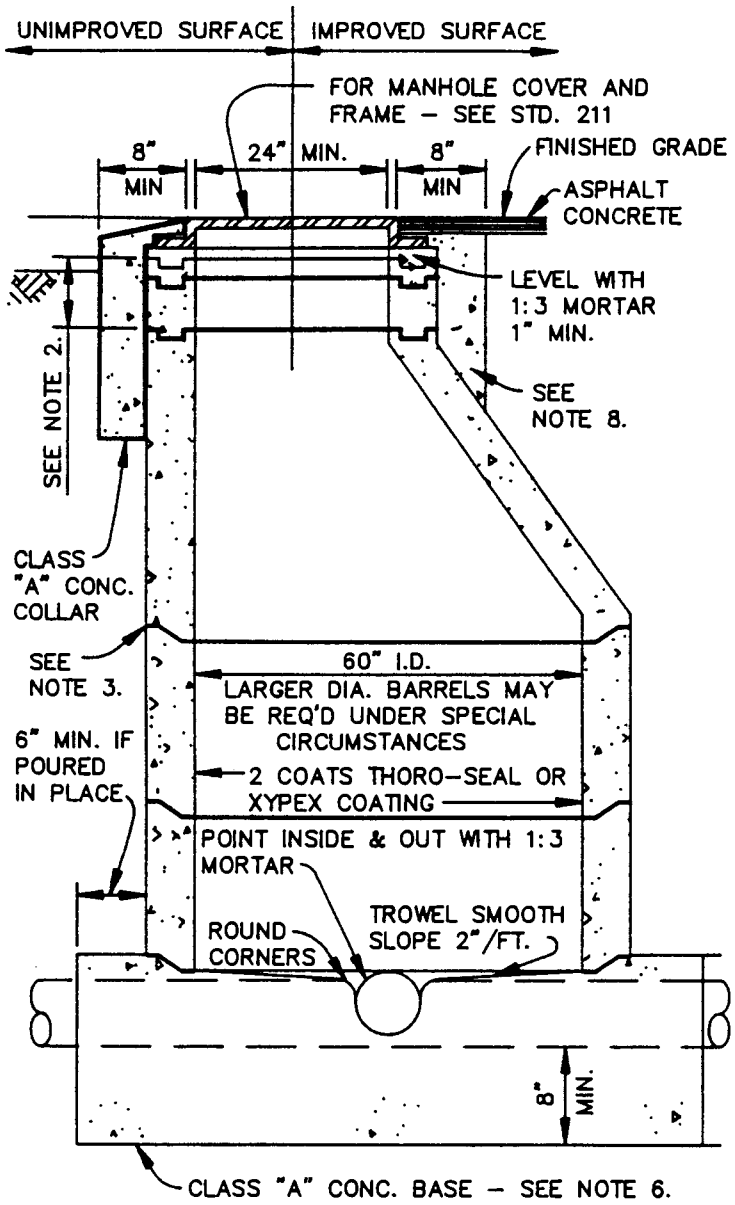

NOTES:

1. WHEN MANHOLES ARE INSTALLED IN UNIMPROVED AREAS, THE TOP OF THE COVER SHALL BE A MIN. OF 1 FOOT ABOVE ADJACENT FINISHED GRADE.
2. MIN. OF ONE 3" AND ONE 6" GRADE ADJUSTMENT RINGS. MAX. HEIGHT OF GRADE ADJUSTMENT RINGS = 20" ALTERNATELY, CONTRACTOR MAY CAST GRADE ADJUSTMENT RINGS IN PLACE.
3. SET ALL BARREL SECTIONS & TAPER SECTIONS IN PLASTIC GASKET, RAM-NEK OR APPROVED ALTERNATE. TYP. JOINT 1-1/2" (3/4" X 2-1/2") RAM-NEK SEAL (2 SEALS IN HIGH WATER TABLE AREAS).
4. CONE SECTION (TAPER) MUST BE ECCENTRIC FOR 60" MANHOLE UNLESS OTHERWISE SPECIFIED AND APPROVED BY THE CITY ENGINEER.
5. POURED-IN-PLACE MANHOLES ALLOWED ONLY WHERE TIEING INTO EXISTING SYSTEM. CONSTRUCT ALL FLOW CHANNELS OF PIPE WHEREVER POSSIBLE. AFTER LOWER RING SECTION IS SET, BREAK OUT TOP HALF OF PIPE PLUSH WITH INSIDE FACE OF M.H. WALL AND CONSTRUCT SHELF AND U-SHAPED CHANNEL. MAKE ELEVATION CHANGES GRADUALLY AND DIRECTIONAL CHANGES WITH SMOOTH CURVES.
6. POURED-IN-PLACE BASE SHALL BE POURED FULL THICKNESS TO UNDISTURBED SIDES OF EXCAVATION OR SHALL BE FORMED. PRECAST BASE TO BE USED ON ALL NEW SYSTEMS AND PLACED ON 12" THICK 3/4" DRAIN ROCK SUBBASE INSTALLED AGAINST UNDISTURBED EARTH.
7. JOINT BETWEEN BASE AND BARREL TO BE SEALED W/1-1/2" (3/4" X 2-1/2") RAM-NEK SEAL (2 SEALS IN HIGH WATER TABLE AREAS), OR PLASTER 6" FILLET, 1:3 MORTAR.
8. CLASS "A" CONCRETE COLLAR SHALL BE 2" BELOW FINISHED GRADE.
9. STANDARD MANHOLE BARREL SECTION PER ASTM C478.
10. 60" I.D. MANHOLE TO BE USED FOR ALL TRUNK AND COLLECTOR SEWERS 18" TO 30" OR WHERE DIMENSION FROM FINISHED GRADE TO THE SEWER FLOW LINE IS GREATER THAN 8'-0", AS INDICATED ON THE DESIGN PLANS.
11. MANHOLES ON TRUNK SEWERS LARGER THAN 30", SHALL BE APPROVED BY THE CITY ENGINEER.

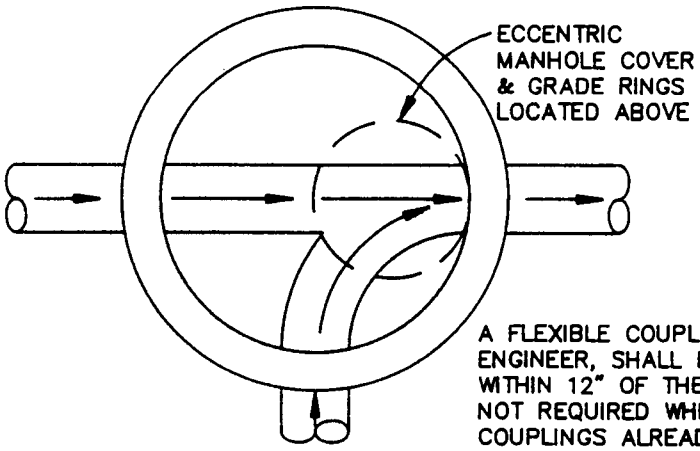

A FLEXIBLE COUPLING, AS APPROVED BY THE CITY ENGINEER, SHALL BE INSTALLED IN THE SEWER MAIN WITHIN 12" OF THE BASE OF THE MANHOLE (TYP). NOT REQUIRED WHEN PRECAST BASES ARE MANUF. W/FLEX COUPLINGS ALREADY INSTALLED.

MANHOLE BASE

CHANNELIZATION PLAN AND LOCATION OF ECCENTRIC MANHOLE COVER

SCALE: NONE	CITY OF ST. HELENA	DATE: JUNE 19[illegible]
DRAWN: CKM	STANDARD 60" DIA. PRECAST CONCRETE. MANHOLE SANITARY SEWER	STD. NO.
CHK: TMS		202
APPVD: MSO		

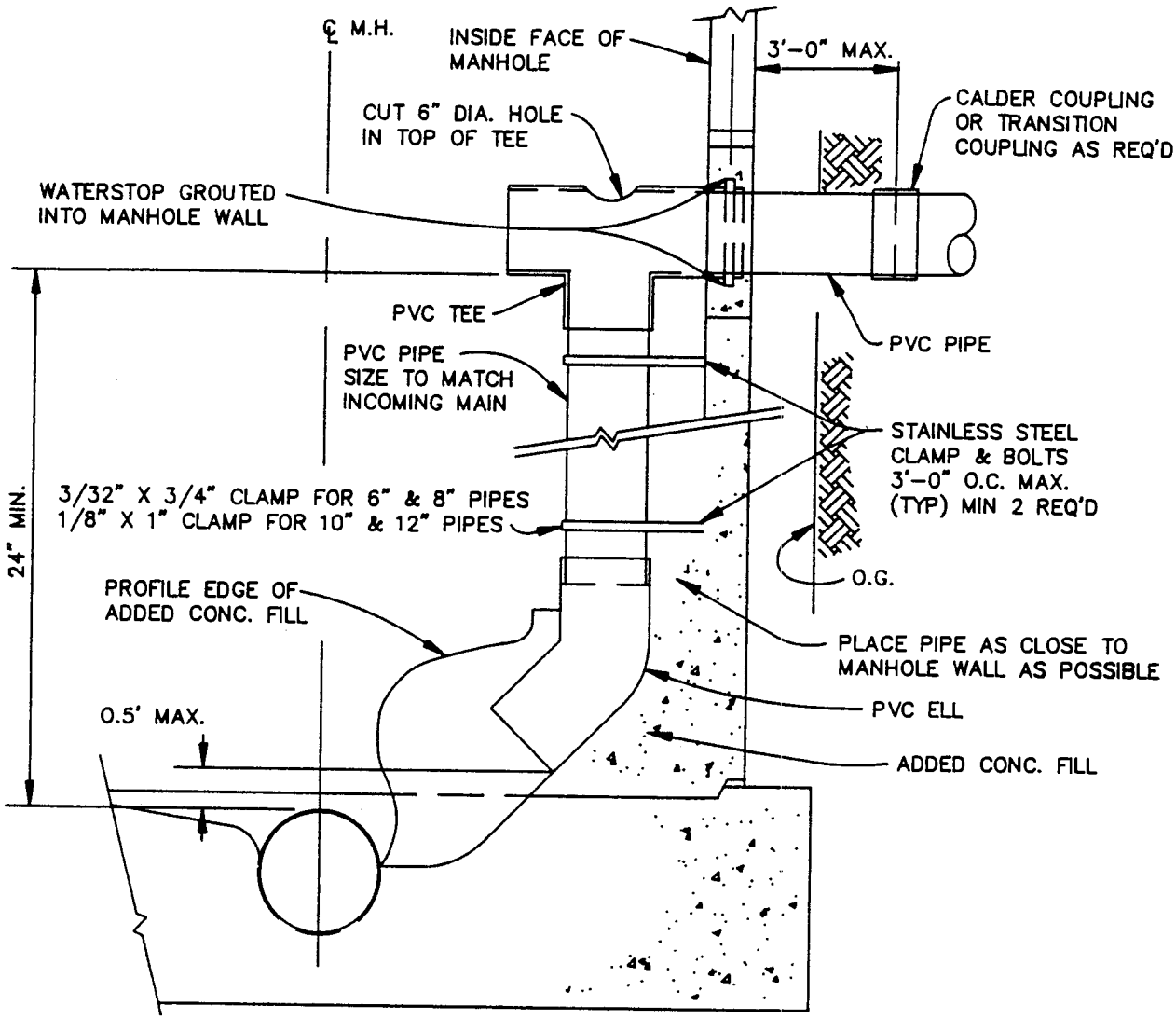

NOTES:

1. INSTALL WATERSTOP IN ACCORDANCE WITH MANUFACTURER'S INSTRUCTIONS AS SHOWN.
2. NEW MANHOLES CONSTRUCTED USING THIS STANDARD SHALL BE 60" IN DIAMETER, AND INSTALLED IN CONFORMANCE WITH STD. 202.
3. ENCLOSE ELL IN CONCRETE. FORM SMOOTH CHANNEL TO MANHOLE FLOWLINE.
4. PVC PIPE AND FITTINGS TO BE SDR 35 OR SCH 40.
5. INSIDE DROP TO BE USED ONLY PER APPROVAL OF CITY ENGINEER.

SCALE: NONE	CITY OF ST. HELENA	DATE: JUNE 1993
DRAWN: CKM	INSIDE DROP IN SANITARY SEWER MANHOLE	STD. NO. 203
CHK: TMS		
APPVD: MSO		

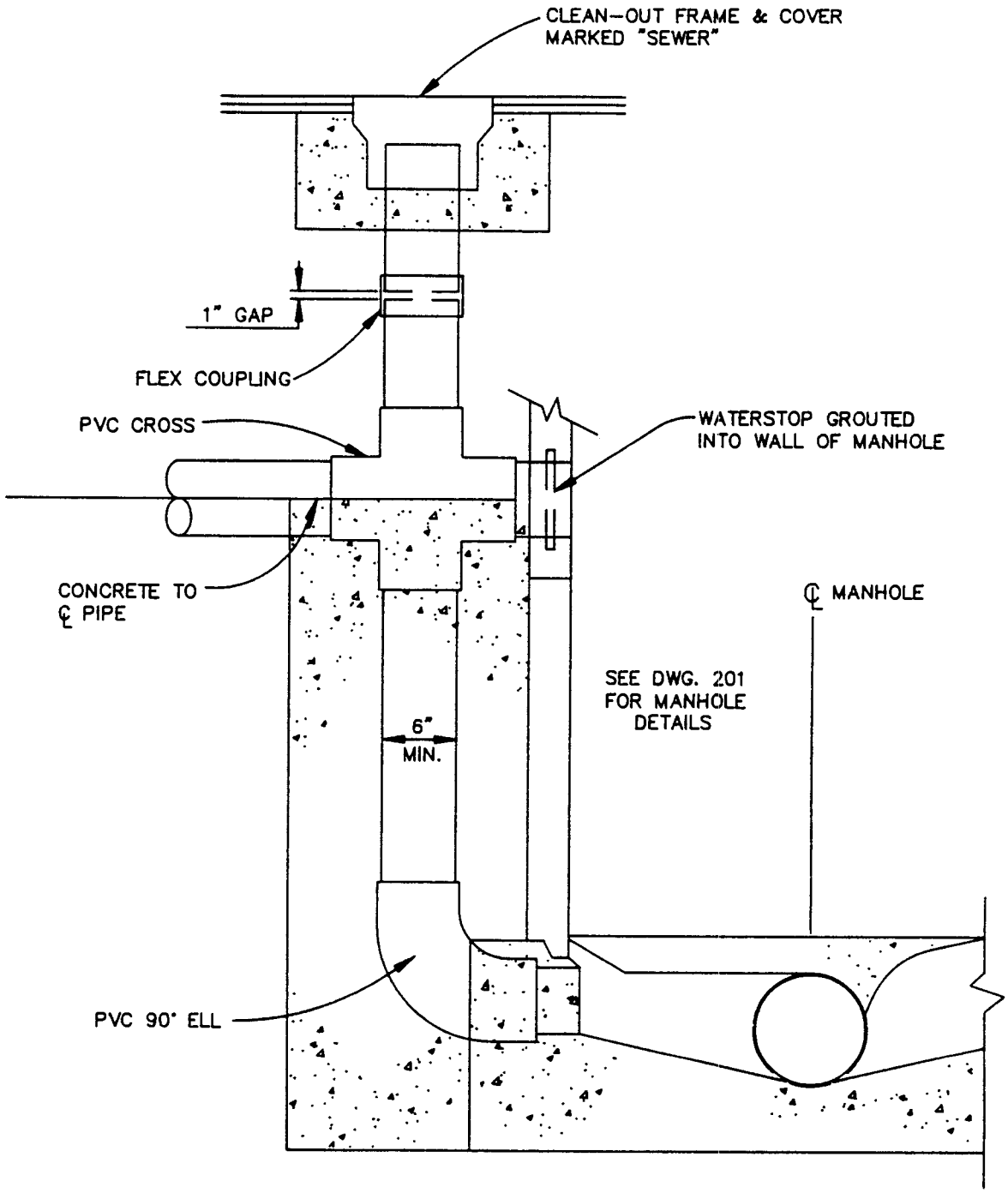

NOTES:

1. PVC PIPE AND FITTINGS TO BE SDR 35 OR SCH 40.
2. FORM SMOOTH CHANNEL TO FLOWLINE.
3. DROP MANHOLE TO BE USED ONLY WITH APPROVAL OF CITY ENGINEER.

SCALE: NONE	CITY OF ST. HELENA	DATE: JUNE 1993
DRAWN: CKM	OUTSIDE DROP IN	STD. NO.
CHK: TMS	SANITARY SEWER MANHOLE	204
APPVD: MSO		

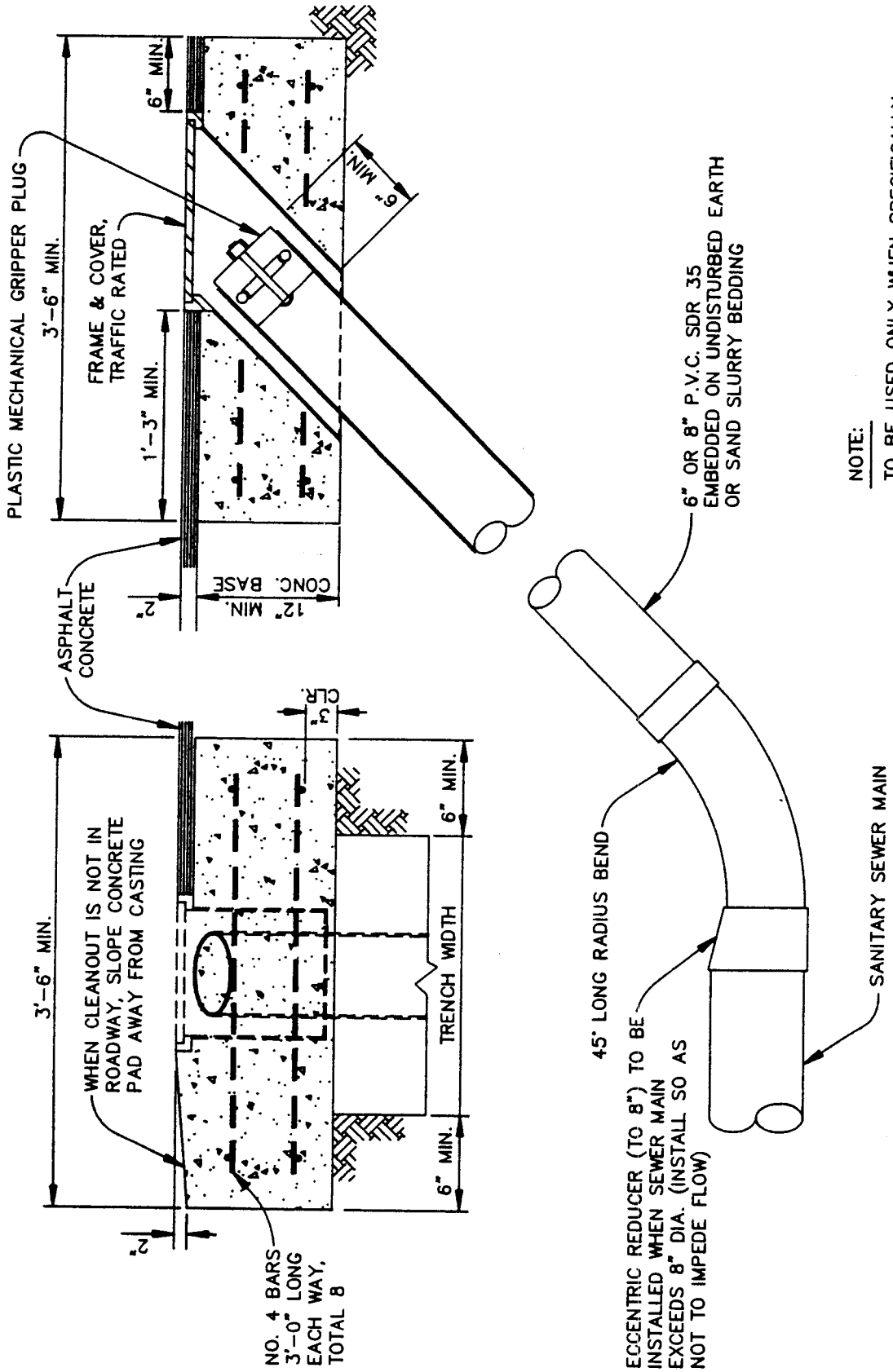

NOTE:
TO BE USED ONLY WHEN SPECIFICALLY AUTHORIZED BY THE CITY ENGINEER

SCALE: NONE	CITY OF ST. HELENA	DATE: JUNE 1993
DRAWN: DRH	TEMPORARY MAINLINE CLEANOUT	STD. NO.
CHK:		205
APPVD:		

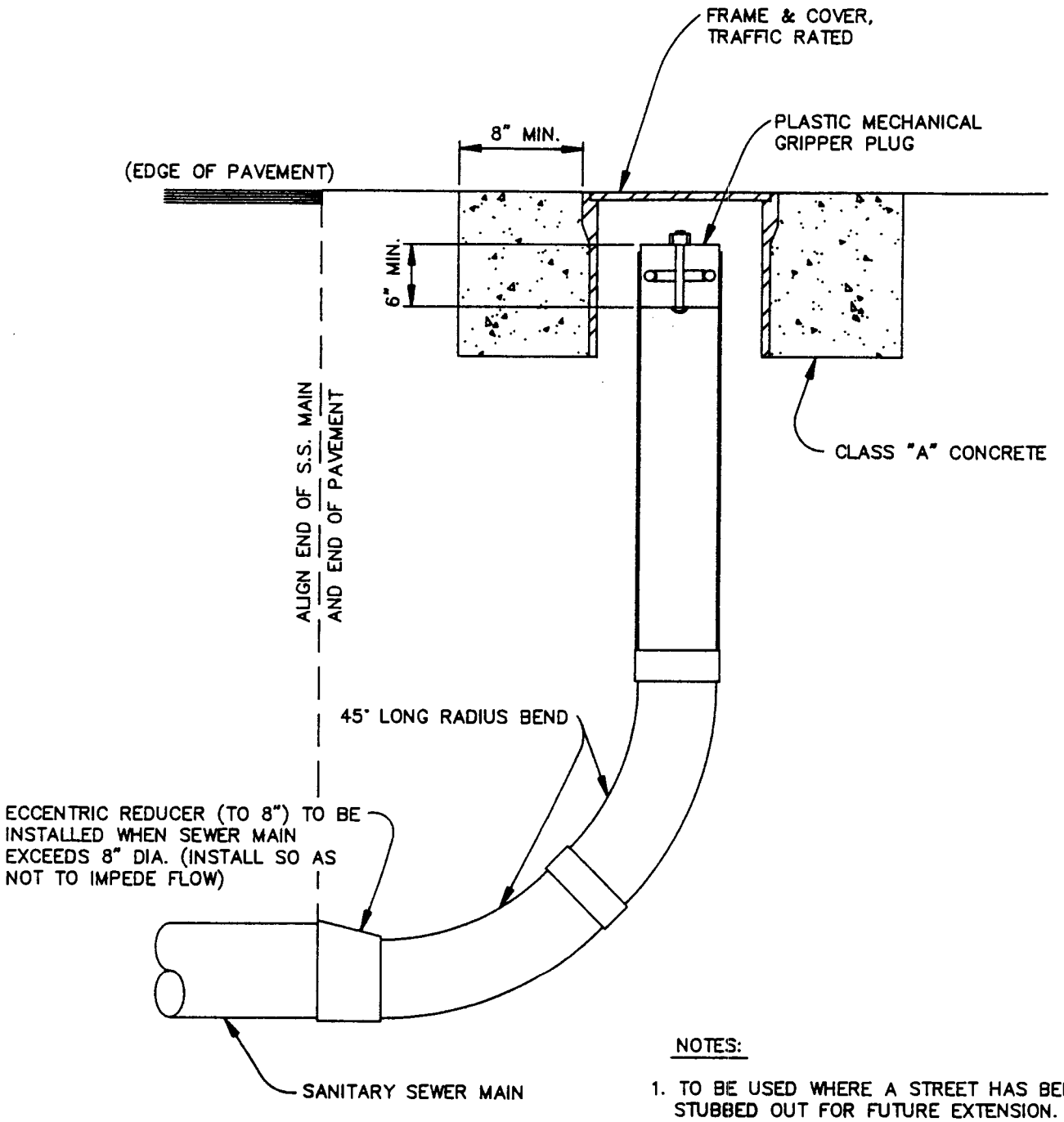

NOTES:

1. TO BE USED WHERE A STREET HAS BEEN STUBBED OUT FOR FUTURE EXTENSION.
2. TO BE USED ONLY WHEN SPECIFICALLY AUTHORIZED BY THE CITY ENGINEER.
3. VALVE BOX LID SHALL BE MARKED "SEWER".
4. EASEMENT ACQUISITION MAY BE REQ'D.

SCALE: NONE	CITY OF ST. HELENA	DATE: JUNE 199[illegible]
DRAWN: DRH	TEMPORARY MAINLINE CLEANOUT	STD. NO.
CHK:		206
APPVD:		

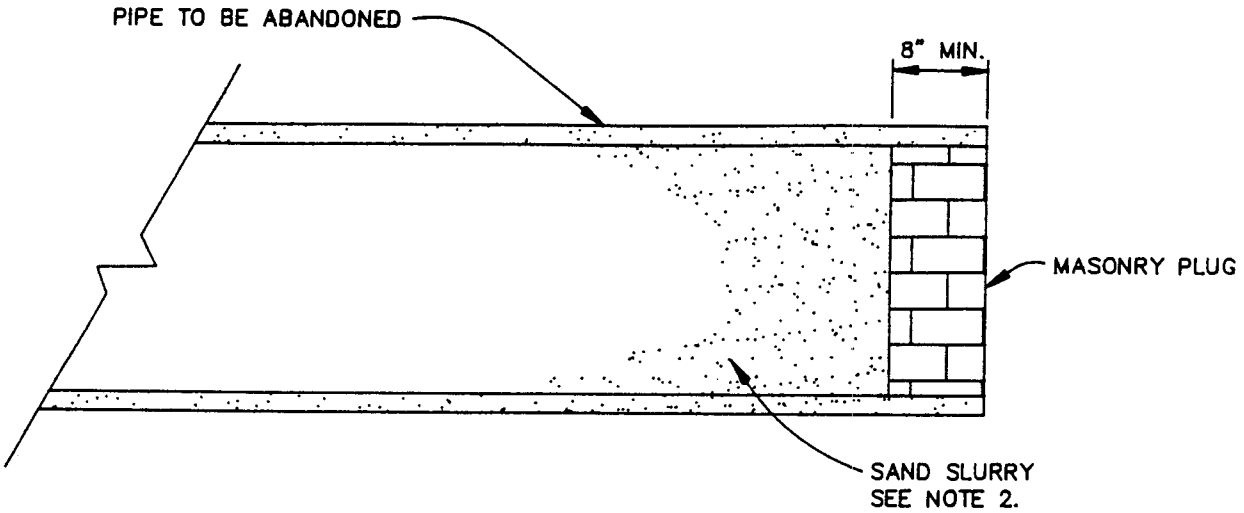

12" DIAMETER PIPE AND LARGER

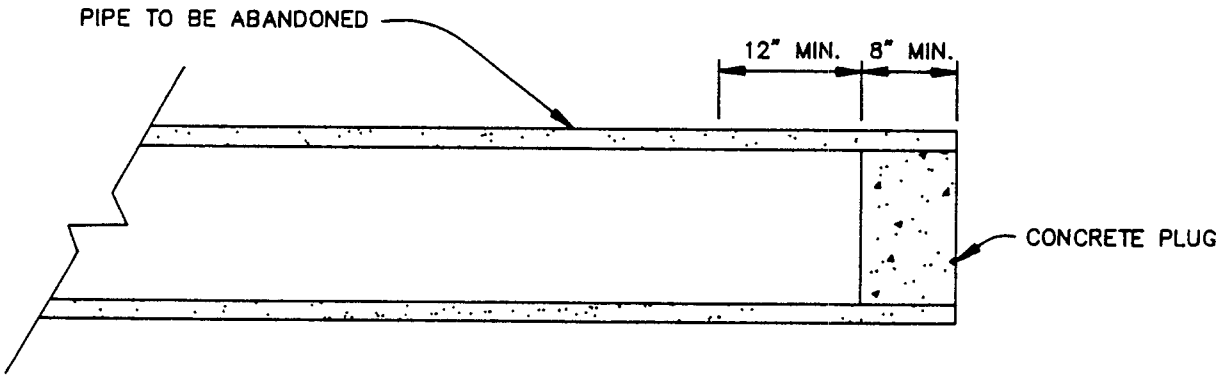

10" DIAMETER PIPE AND SMALLER

NOTES:

1. PIPE PLUGS SHALL BE INSTALLED TO THE SATISFACTION OF THE CITY ENGINEER.
2. ABANDONED PIPES, 12" AND LARGER, SHALL BE BROKEN INTO EVERY 50' AND SHALL BE FILLED COMPLETELY WITH SAND SLURRY OR CONTROL DENSITY FILL MATERIAL.

SCALE: NONE	CITY OF ST. HELENA	DATE: JUNE 1993
DRAWN: DRH	ABANDONED PIPE PLUG DETAIL	STD. NO.
CHK:		207
APPVD:		

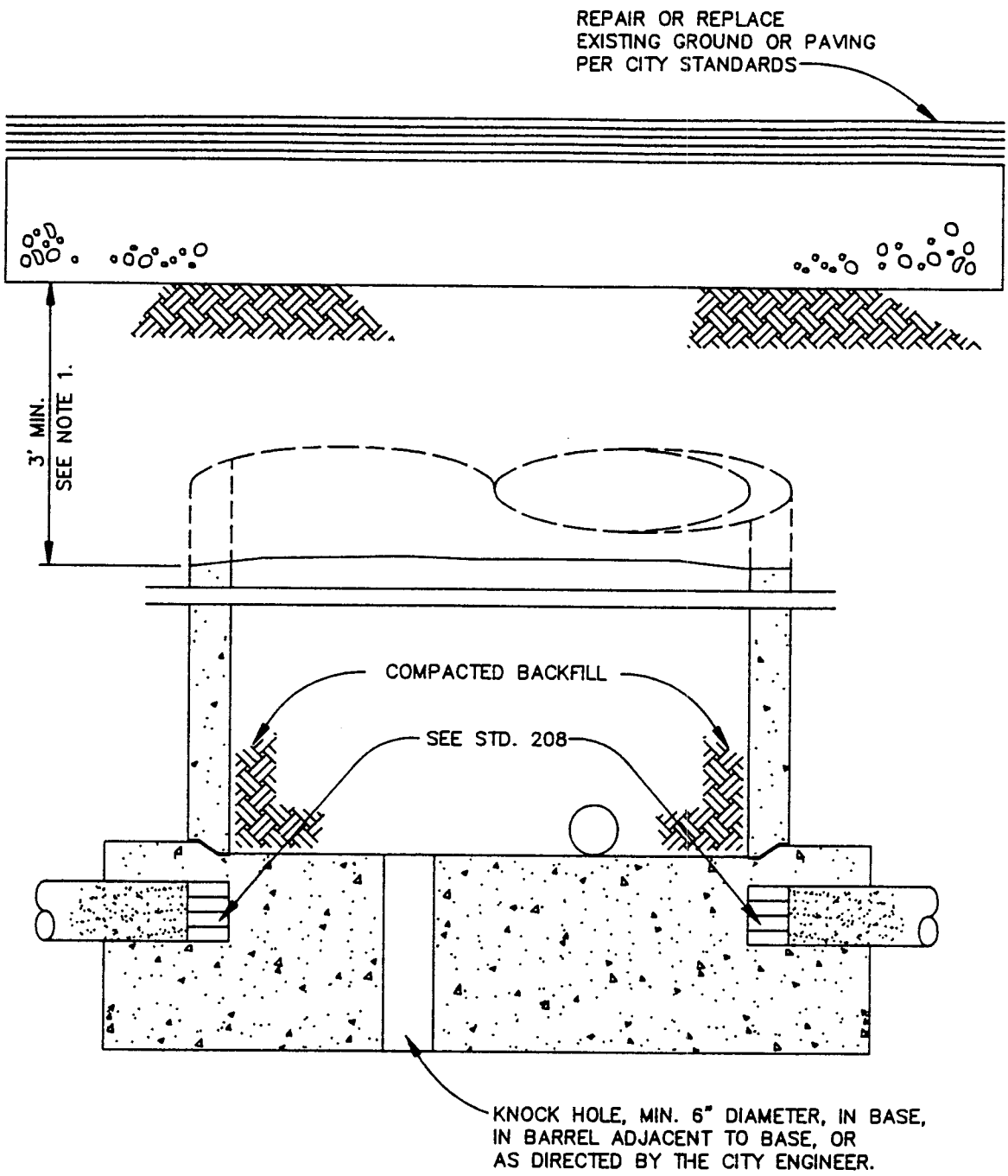

NOTES:

1. REMOVE FRAME, COVER, TAPER AND BARREL SECTIONS.
2. AFTER PLUGGING ALL PIPES IN MANHOLE, THE REMAINING PORTION OF THE BARREL SECTION AND ALL VOIDS CREATED BY THE REMOVAL OF THE UPPER PORTIONS OF THE MANHOLE, SHALL BE BACKFILLED AND COMPACTED TO 90% RELATIVE DENSITY. USE TRENCH BACKFILL OR PIPE BEDDING MATERIAL.

SCALE: NONE	CITY OF ST. HELENA	DATE: JUNE 1993
DRAWN: DRH	ABANDONED MANHOLE DETAIL	STD. NO.
CHK:		208
APPVD:		

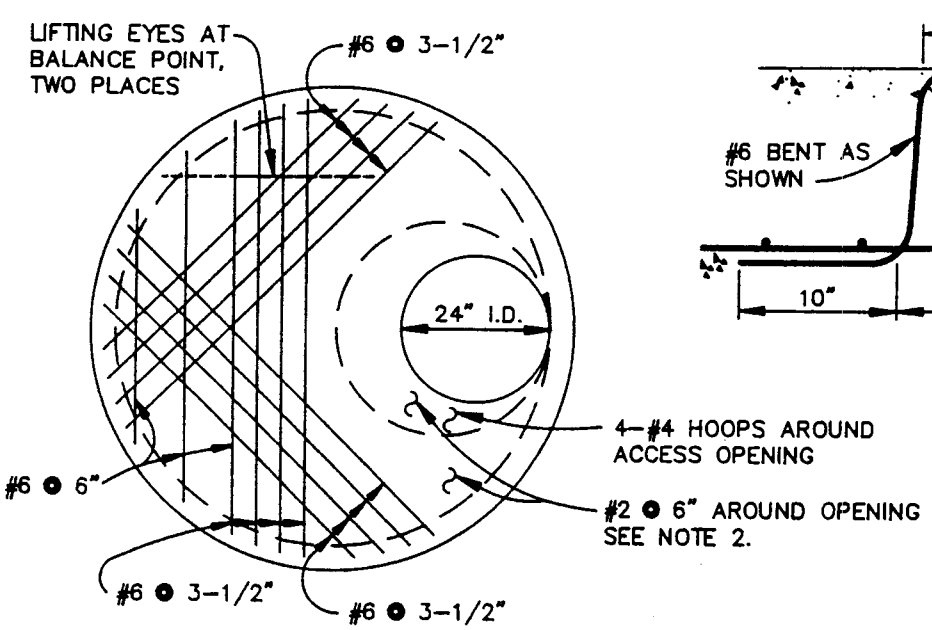

SLAB PLAN

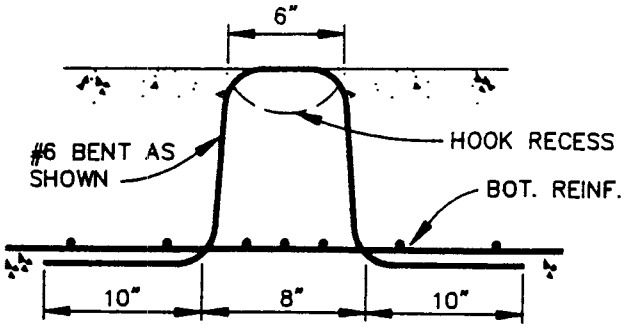

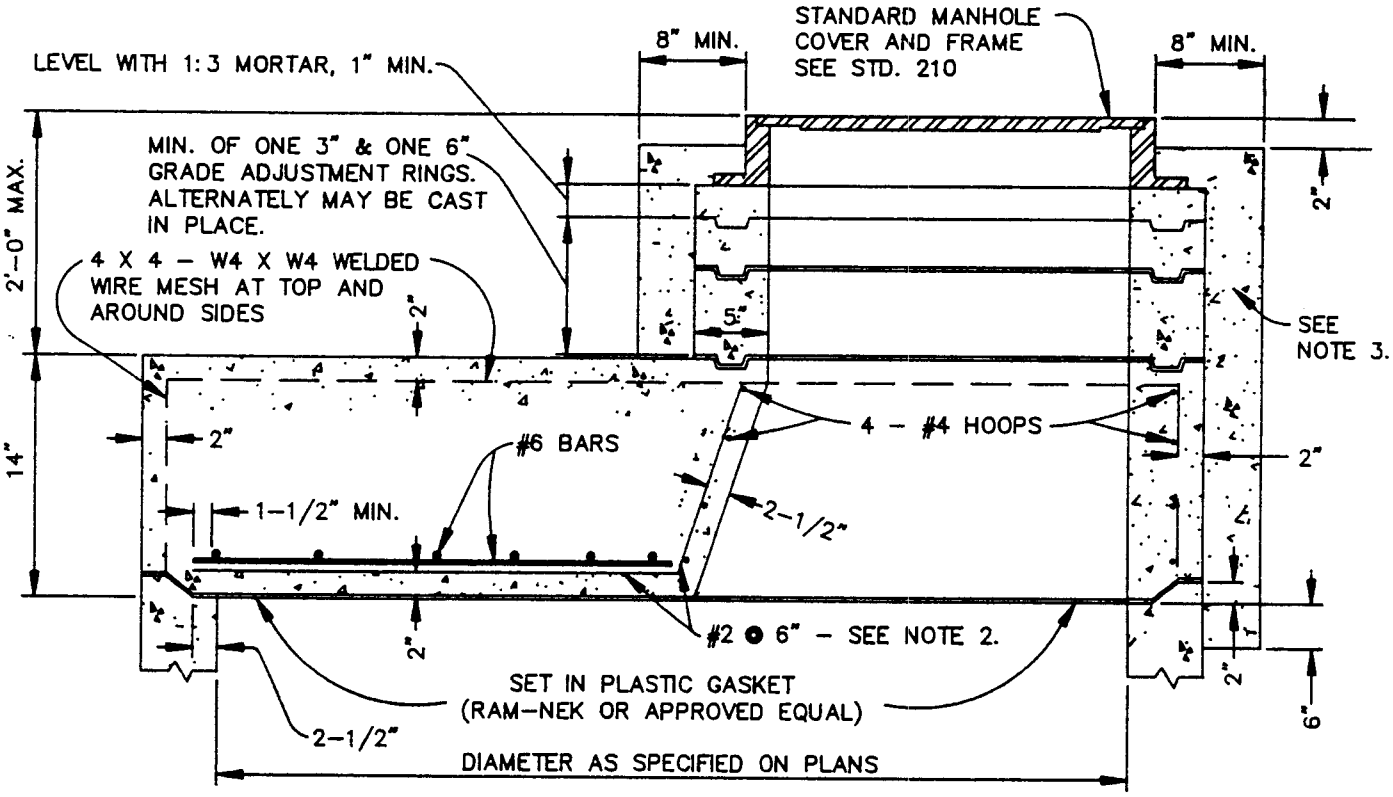

NOTES:

1. FOR DETAILS AND SPECIFICATIONS OF BASE AND BARREL SECTIONS, SEE CITY STDS. 201 OR 202.
2. #2 BARS BENTS UP AND SPACED 6" O.C. AROUND 24" OPENING. HORIZONTAL LEGS TO FAN OUT EQUALLY SPACED, TO 2-1/2" CLEAR AT EDGE OF SLAB.
3. CLASS "A" CONCRETE COLLAR.

SCALE: NONE	**CITY OF ST. HELENA**	DATE: JUNE 1993
DRAWN: DRH	STANDARD PRECAST CONCRETE MANHOLE REDUCER SLAB SANITARY SEWER	STD. NO.
CHK:		209
APPVD:		

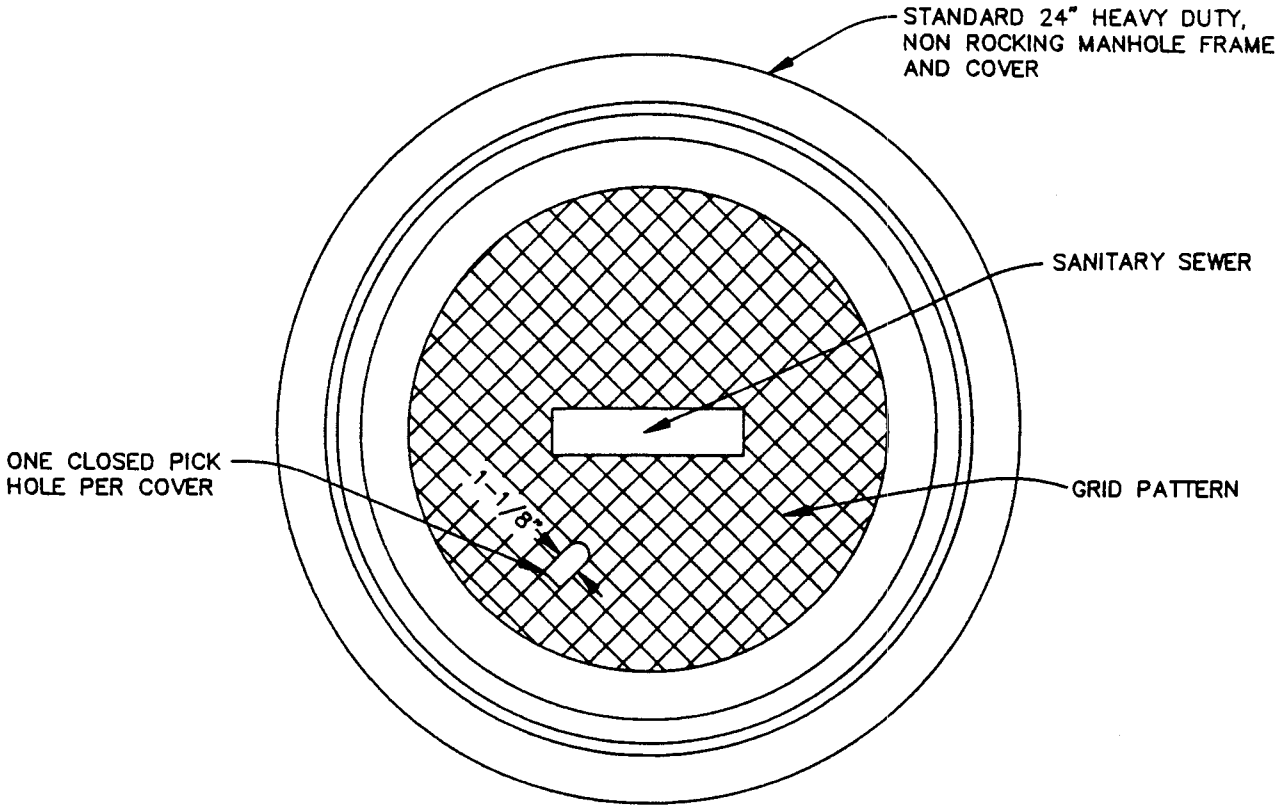

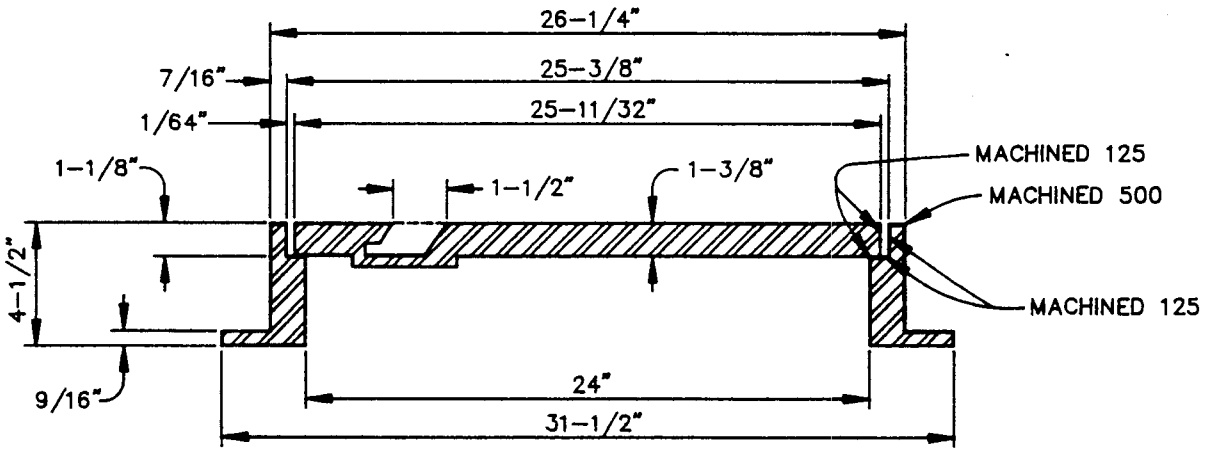

NOTES:

1. SPECIFICY SANITARY SEWER WHEN ORDERING. ALL CASTINGS SHALL BE DIPPED IN APPROVED ASPHALT PAINT.
2. ALL MATERIAL USED IN MANUFACTURING SHALL CONFORM TO A.S.T.M. DESIGNATION A-159-G3000, OR OF UNITED STATES GOVERNMENT SPECIFICATIONS QQI-652B.
3. MINIMUM WEIGHT COMPONENTS: COVER - 130 POUNDS; FRAME - 135 POUNDS.

SCALE: NONE	CITY OF ST. HELENA	DATE: JUNE 1993
DRAWN: DRH	STANDARD MANHOLE FRAME AND COVER	STD. NO.
CHK:		210
APPVD:		

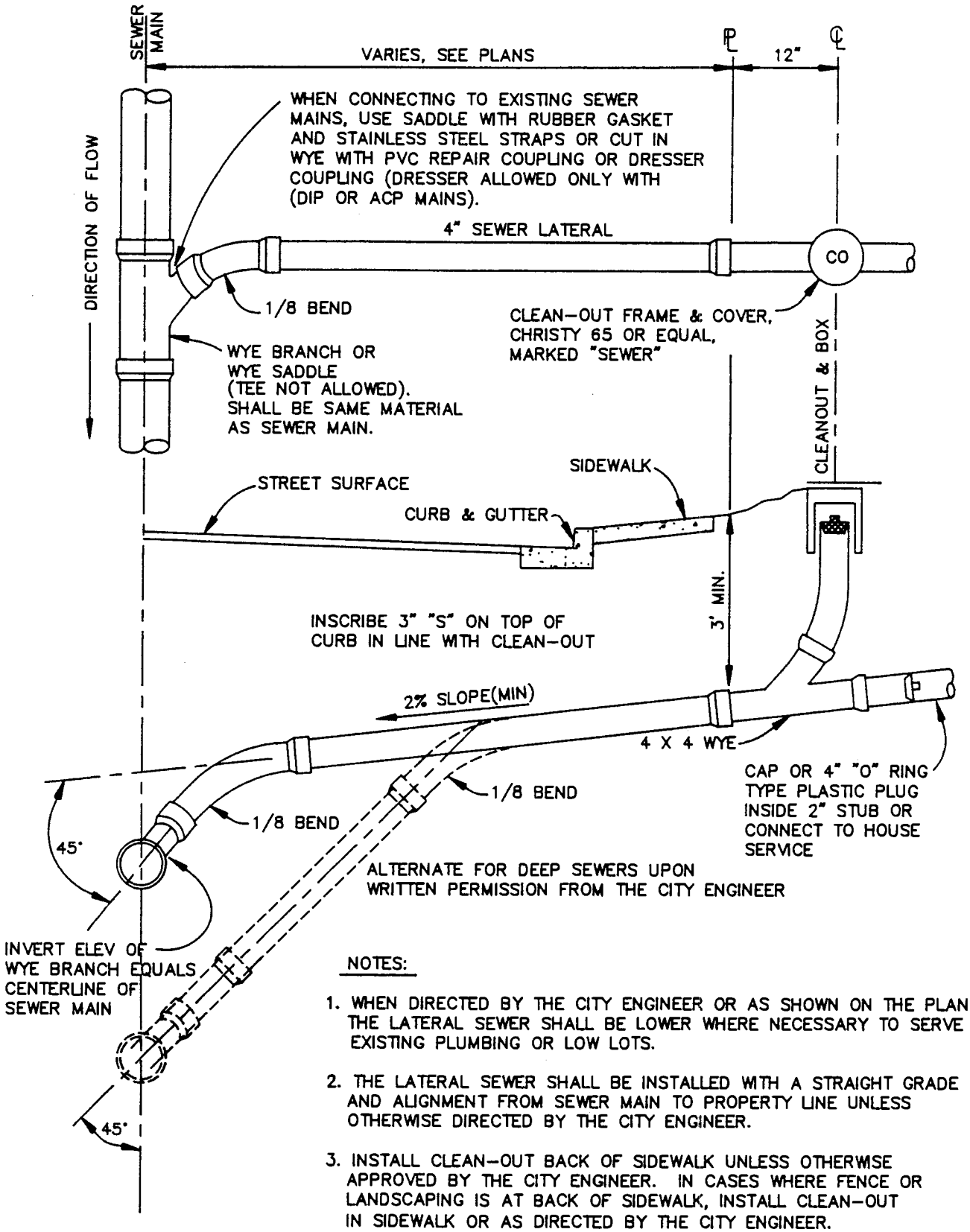

NOTES:

1. WHEN DIRECTED BY THE CITY ENGINEER OR AS SHOWN ON THE PLANS, THE LATERAL SEWER SHALL BE LOWER WHERE NECESSARY TO SERVE EXISTING PLUMBING OR LOW LOTS.
2. THE LATERAL SEWER SHALL BE INSTALLED WITH A STRAIGHT GRADE AND ALIGNMENT FROM SEWER MAIN TO PROPERTY LINE UNLESS OTHERWISE DIRECTED BY THE CITY ENGINEER.
3. INSTALL CLEAN-OUT BACK OF SIDEWALK UNLESS OTHERWISE APPROVED BY THE CITY ENGINEER. IN CASES WHERE FENCE OR LANDSCAPING IS AT BACK OF SIDEWALK, INSTALL CLEAN-OUT IN SIDEWALK OR AS DIRECTED BY THE CITY ENGINEER.

SCALE: NONE	CITY OF ST. HELENA	DATE: JUNE 1993
DRAWN: DRH	SEWER SERVICE LATERAL	STD. NO.
CHK:		211
APPVD:		

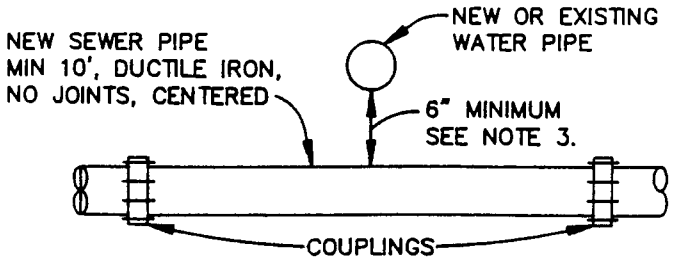

NEW SEWER UNDER
NEW OR EXISTING WATER

CASE 1

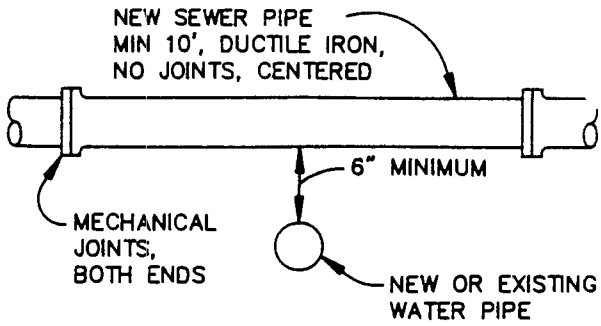

NEW SEWER OVER
NEW OR EXISTING WATER

CASE 2

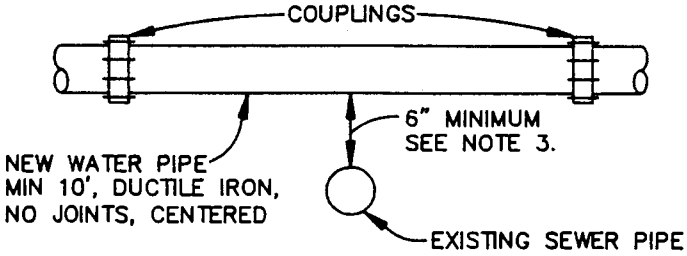

NEW WATER OVER
EXISTING SEWER

CASE 3

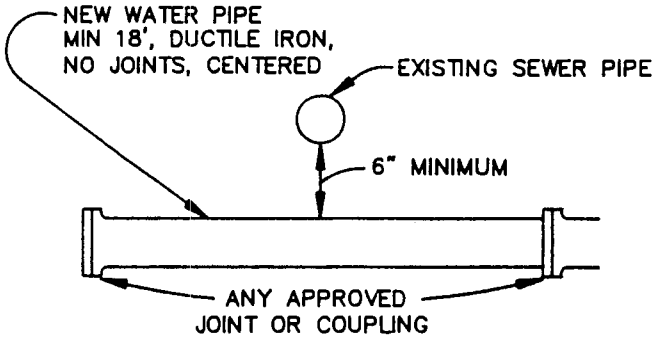

NEW WATER UNDER
EXISTING SEWER

CASE 4

NOTES:

1. THIS STANDARD APPLIES TO PIPES UP TO AND INCLUDING 18" DIAMETER. ALL CROSSINGS OF LARGER DIAMETER SHALL BE AS APPROVED BY THE CITY ENGINEER.
2. ALL NEW DUCTILE IRON SHALL BE WRAPPED IN POLYETHYLENE PER GENERAL SPECIFICATIONS.
3. WHERE SEWER CROSSES BELOW A WATER MAIN, WITH 1' OR MORE VERTICAL CLEARANCE, NO SPECIAL INSTALLATION IS REQUIRED.
4. "NEW PIPE UNDER EXISTING – CASE 5" SHALL BE USED WHEN THE EXISTING PIPE HAS A JOINT OVER OR WITHIN 2' OF NEW TRENCH.
5. ANY PIPE–PIPE CROSSING WITH LESS THAN 6" VERTICAL CLEARANCE SHALL NOT BE INSTALLED WITHOUT APPROVAL OF THE CITY ENGINEER.
6. FOR WATER MAIN LOWERING DETAIL, SEE CITY STANDARD 117.
7. SEE GENERAL SPECIFICATIONS LIST FOR APPROVED COUPLINGS.

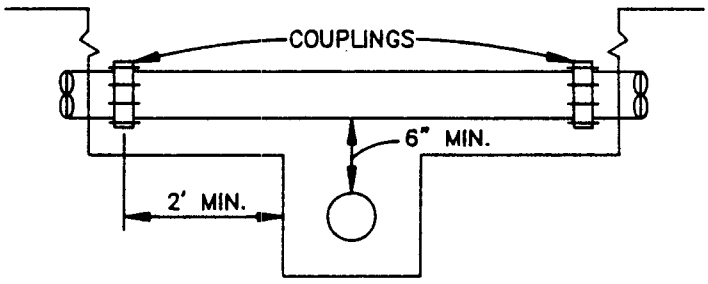

NEW PIPE UNDER EXISTING

CASE 5 – SEE NOTE 4.

SCALE: NONE	CITY OF ST. HELENA	DATE: JUNE 1995
DRAWN: DRH	SEWER SERVICE LATERAL	STD. NO.
CHK:		212
APPVD:		

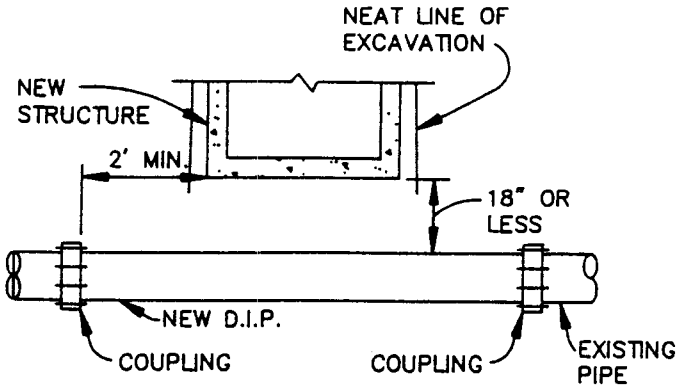

NEW PIPE–STRUCTURE OVER EXISTING

TYPE B

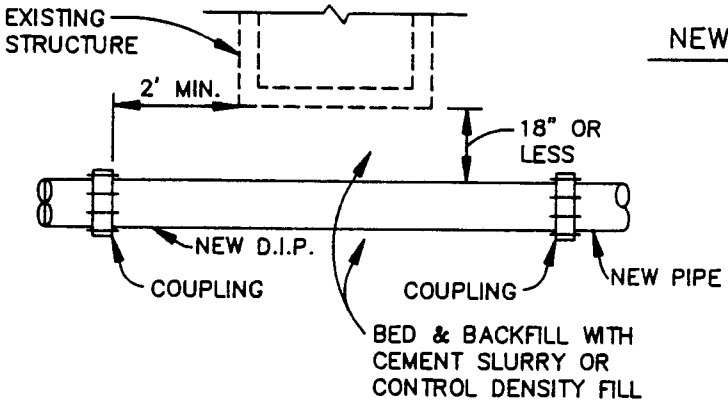

NEW PIPE UNDER EXISTING

TYPE A

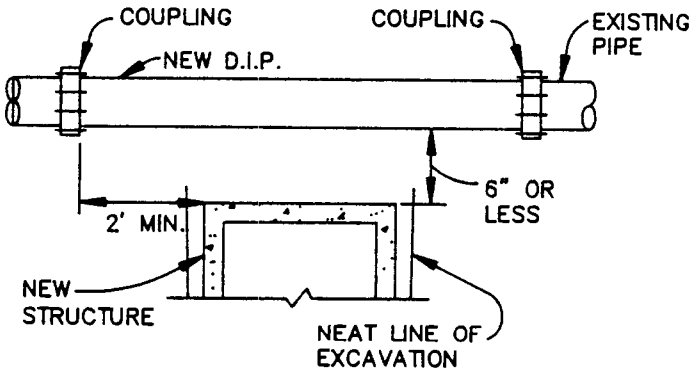

NEW PIPE–STRUCTURE UNDER EXISTING

TYPE C

NOTES:

1. THIS STANDARD APPLIES TO PIPES UP TO AND INCLUDING 18" DIAMETER. ALL CROSSINGS OF LARGER DIAMETER SHALL BE AS APPROVED BY THE CITY ENGINEER.
2. WHEN PIPES CROSS WITHIN THE DIMENSIONS SHOWN, A NEW DUCTILE IRON PIPE SECTION SHALL BE INSTALLED AS DETAILED.
3. ALL DUCTILE IRON PIPE SHALL BE ENCASED IN POLYETHYLENE FILM IN THE TUBE FORM.
4. ANY TYPE "A" INSTALLATION REQUIRING MORE THAN ONE LENGTH OF PIPE SHALL BE ENCASED PER CITY STANDARD 123.
5. SEE GENERAL SPECIFICATIONS APPROVED LIST FOR APPROVED COUPLINGS.

SCALE: NONE	CITY OF ST. HELENA	DATE: JUNE 1993
DRAWN: DRH	PIPE–STRUCTURE CROSSING DETAIL	STD. NO.
CHK:		213
APPVD:		

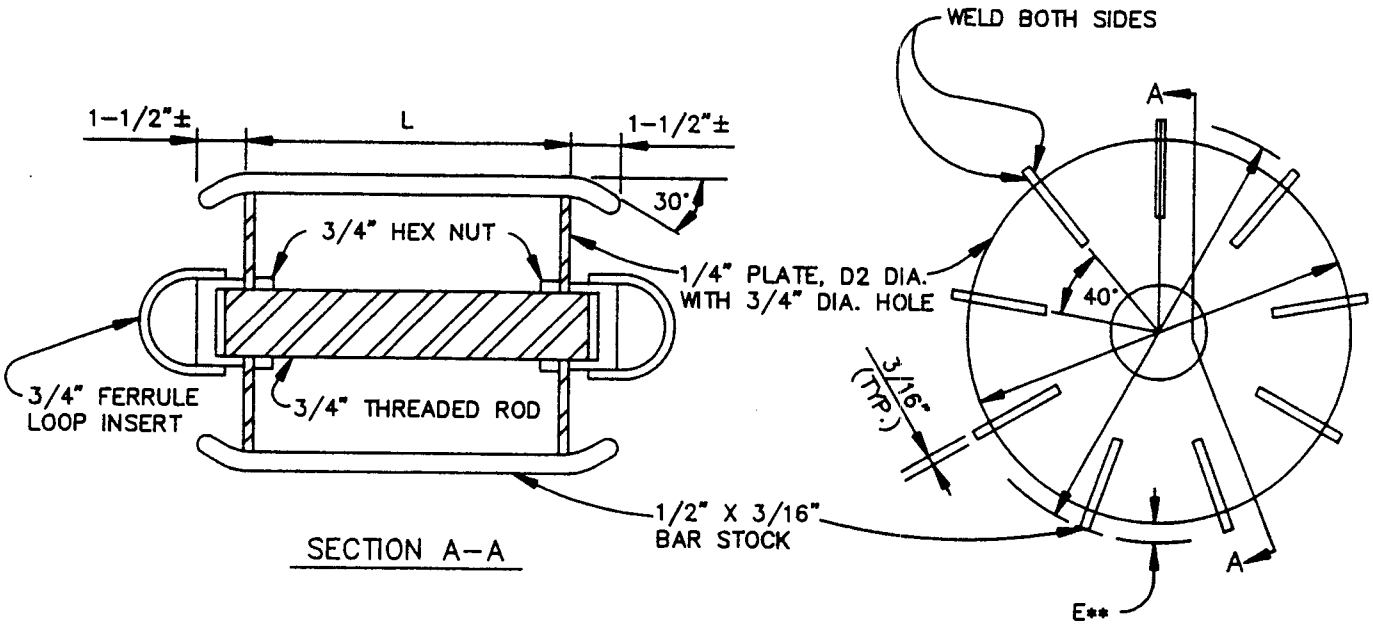

		5% DEFLECTION	
		BAS ASTM D 2751 PVC ASTM D 3034	
		SDR35	
NOM. DIA.	L	D1**	D2***
6"	6"	5.629	4.629
8"	8"	7.537	6.537
10"	10"	9.421	8.421
12"	12"	11.210	10.210
15"	15"	13.729	12.729

** 1. MANDREL DIA. HAS BEEN CALCULATED TO CORRECT CHORD LENGTH ERROR "E".

*** 2. MINIMUM PLATE DIAMETER.

3. A PROVING RING OF THE SPECIFIED DIAMETER (D1) SHALL BE SUPPLIED WITH EACH DEFLECTION MANDREL.

NOTES:

1. MARK ALL MANDRELS WITH ASTM SPECIFICATION NUMBER, SDR NUMBER, AND DEFLECTION.

2. THE 1/2" BAR STOCK ON EDGE PROVIDES CLEARANCE TO PASS SMALL AMOUNTS OF SOIL WHICH MAY BE IN PIPE.

SCALE: NONE	CITY OF ST. HELENA	DATE: JUNE 1993
DRAWN: DRH	PLASTIC SEWER PIPE DEFLECTION MANDREL	STD. NO. 214
CHK:		
APPVD:		

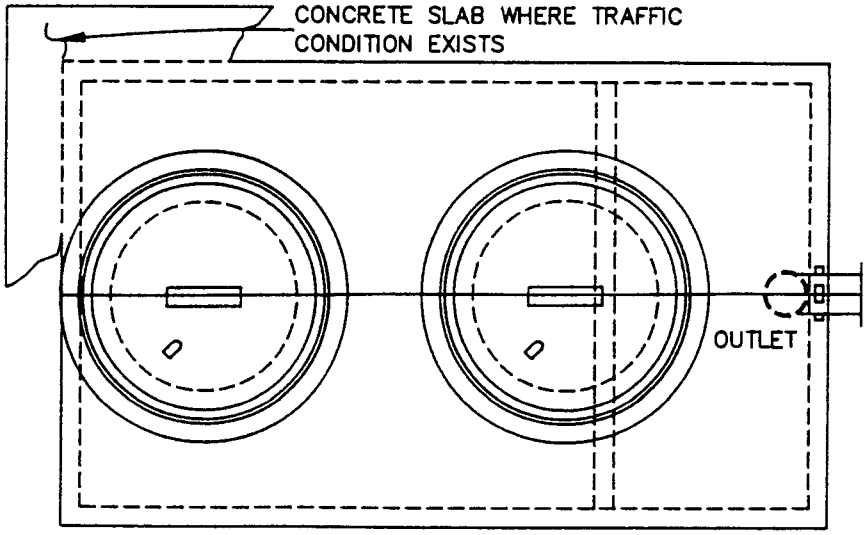

PLAN

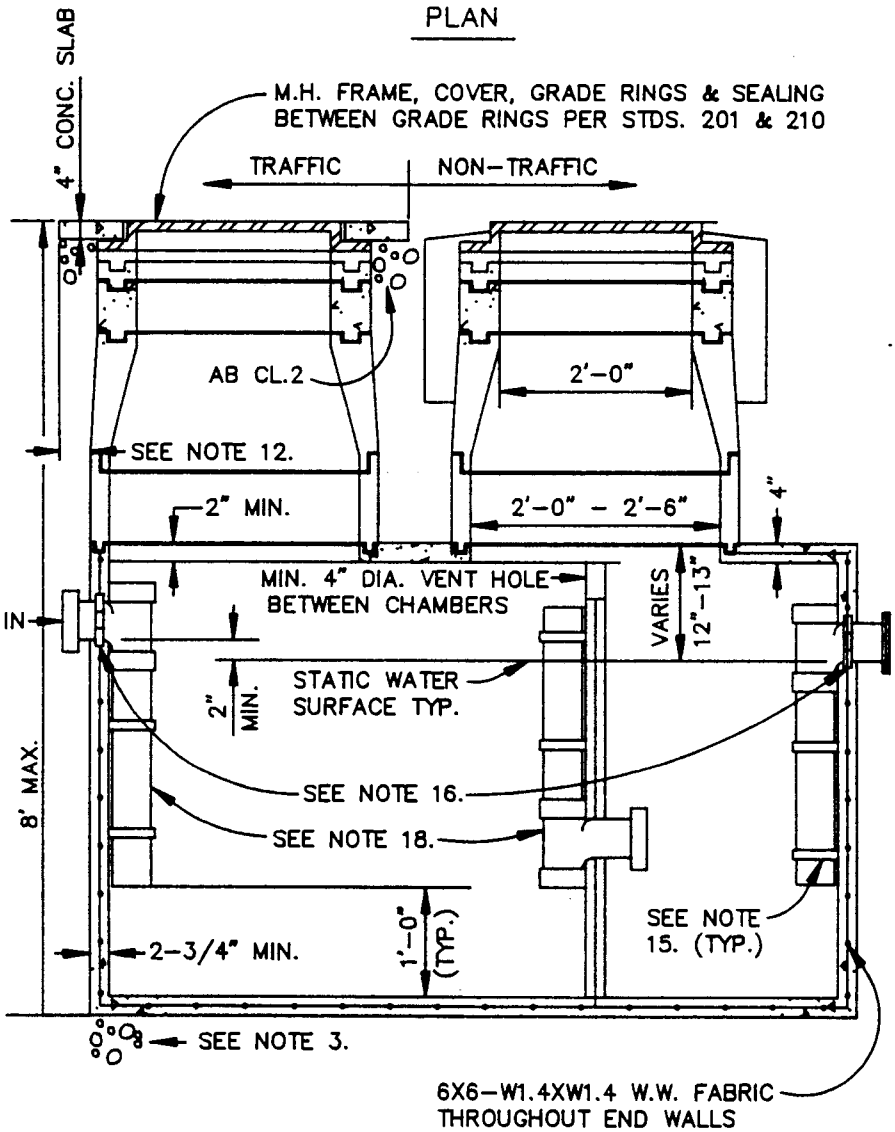

SECTION

NOTES:

1. TANK TO BE PRECAST AS MANUFACTURED BY:
   M.C. NOTTINGHAM
   PACIFIC CONCRETE PRODUCTS
   SELVAGE CONCRETE PRODUCTS
   OR CITY APPROVED EQUAL.
2. POLYETHYLENE TANKS ACCEPTABLE IN NON-TRAFFIC AREAS UPON SPECIFIC APPROVAL OF THE CITY ENGINEER.
3. 3" MIN. BEDDING MATERIAL PER CITY STANDARDS.
4. ALL SURFACE WATER MUST DRAIN AWAY FROM MANHOLES.
5. PIPE SHALL BE 6" MAX. DIAMETER PER U.P.C.
6. CONCRETE MIN. COMPRESSIVE STRENGTH OF 3000 PSI AT 28 DAYS.
7. ALL WYES SHALL BE ONE-WAY CLEANOUT WYES EXCEPT AS NOTED PER U.P.C.
8. GREASE INTERCEPTORS SHALL BE LOCATED OUTSIDE OF BUILDINGS IN A LOCATION ACCESSIBLE TO WASTE HAULER PUMPER.
9. ALL GREASE INTERCEPTORS SHALL BE LOCATED OUTSIDE PUBLIC RIGHT OF WAY.
10. EXCAVATIONS SHALL BE NEAT LINE TYPICALLY ALL SIDES.
11. INTERCEPTOR TO BE USED IN CONJUNCTION WITH "SAMPLING MANHOLE" PER STD. 217.
12. SLAB TO EXTEND MIN. 24" BEYOND ALL SIDES OF TANK (TRAFFIC AREA).
13. ALL WASTE MUST ENTER THROUGH INLET FITTING ONLY.
14. TANK TO BE STENCILED ON UPPER LEFT HAND CORNER OF INLET END IN WHITE.
15. STAINLESS STEEL CLAMP & BOLTS 3'-0" O.C. MAX. (TYP.) MINIMUM 2 REQUIRED.
16. A WATERSTOP CONSISTING OF A STANDARD MANHOLE ADAPTER GASKET AS SUPPLIED BY THE PIPE MANUFACTURER SHALL BE GROUTED INTO THE INTERCEPTOR WALL NEAR THE CENTER OF THE WALL.
17. TANK CAPACITY TO BE DETERMINED AT THE TIME OF INDUSTRIAL WASTE PERMIT APPLICATION.
18. PIPE & FITTINGS TO BE 4" SCH. 40 PVC.
19. REINFORCING BARS INTERMEDIATE GRADE ASTM A615-62T AND A305-56T. REINFORCING WIRE FABRIC - ASTM A185-61T.
20. ALTERNATE DESIGN BY A REGISTERED ENGINEER MAY BE SUBSTITUTED FOR REVIEW BY CITY ENGINEER.

SCALE: NONE	CITY OF ST. HELENA	DATE: JUNE 1993
DRAWN: DRH	PRECAST GREASE INTERCEPTOR	STD. NO.
CHK:		215
APPVD:		

NOTE: TANK TO BE STENCILED ON UPPER LEFT-HAND CORNER OF INLET END IN WHITE.

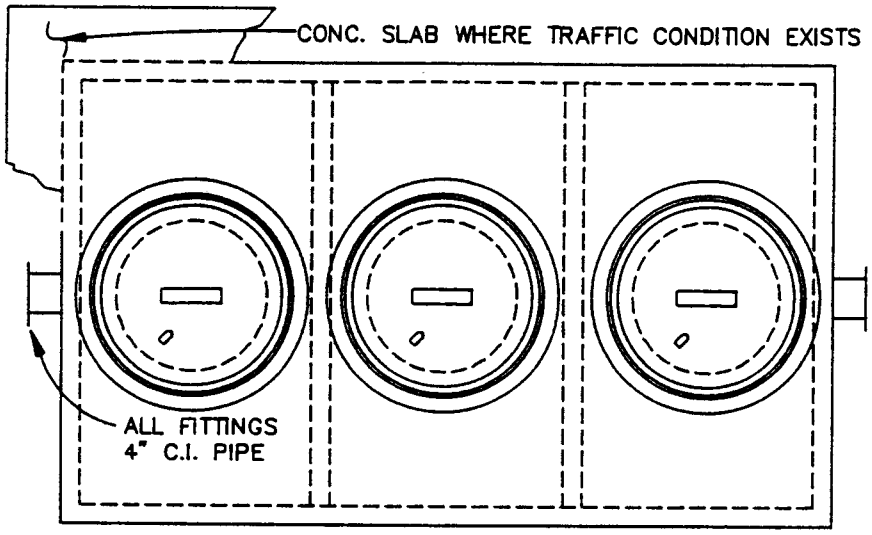

PLAN

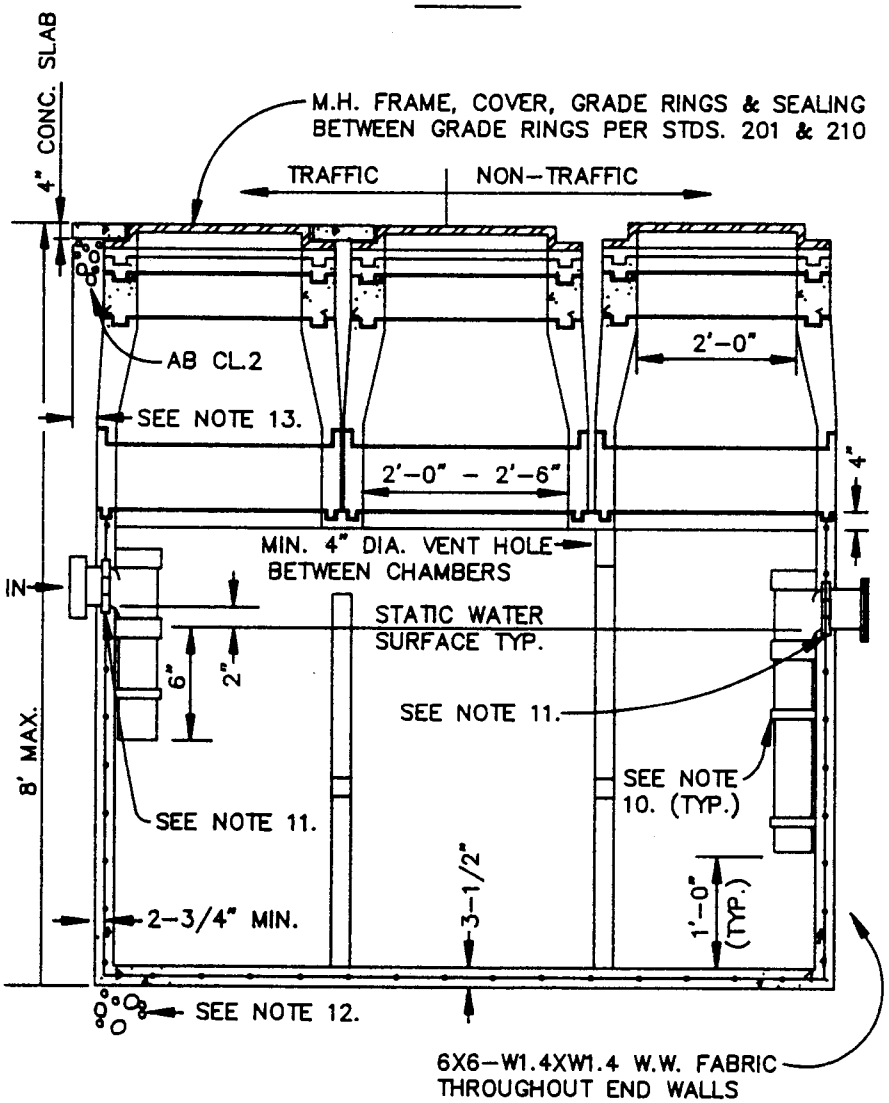

SECTION

NOTES:

1. TANK TO BE PRECAST AS MANUFACTURED BY:
   M.C. NOTTINGHAM
   PACIFIC CONCRETE PRODUCTS
   SELVAGE CONCRETE PRODUCTS
   OR CITY APPROVED EQUAL.
2. ALL GREASE INTERCEPTORS SHALL BE LOCATED OUTSIDE PUBLIC RIGHT OF WAY.
3. GREASE INTERCEPTORS SHALL BE LOCATED OUTSIDE OF BUILDINGS IN A LOCATION ACCESSIBLE TO WASTE HAULER PUMPER.
4. ALTERNATE DESIGN BY A REGISTERED ENGINEER MAY BE SUBSTITUTED FOR REVIEW BY CITY ENGINEER.
5. PIPE SHALL BE 6" MAX. DIAMETER PER U.P.C.
6. EXCAVATIONS SHALL BE NEAT LINE TYPICALLY ALL SIDES.
7. HEIGHT OF TANK ABOVE FITTINGS VARIABLE. ONE FOOT SECTIONS MAY BE ADDED TO REQUIRED F.G.
8. ALL WYES SHALL BE ONE-WAY CLEANOUT WYES EXCEPT AS NOTED PER U.P.C.
9. INTERCEPTOR TO BE USED IN CONJUNCTION WITH "SAMPLING MANHOLE" PER STD. 217.
10. STAINLESS STEEL CLAMP & BOLTS 3'-0" O.C. MAX. (TYP.) MINIMUM 2 REQUIRED.
11. A WATERSTOP CONSISTING OF A STANDARD MANHOLE ADAPTER GASKET AS SUPPLIED BY THE PIPE MANUFACTURER SHALL BE GROUTED INTO THE INTERCEPTOR WALL NEAR THE CENTER OF THE WALL.
12. 3" MIN. BEDDING MATERIAL PER CITY STANDARDS.
13. SLAB TO EXTEND MIN. 24" BEYOND ALL SIDES OF TANK (TRAFFIC AREA).
14. TANK CAPACITY TO BE DETERMINED AT THE TIME OF INDUSTRIAL WASTE PERMIT APPLICATION.
15. PIPE & FITTINGS TO BE 4" SCH. 40 PVC.
16. CONCRETE MIN. COMPRESSIVE STRENGTH OF 3000 PSI AT 28 DAYS.
17. ALL WASTE MUST ENTER THROUGH INLET FITTING ONLY.
18. REINFORCING BARS INTERMEDIATE GRADE ASTM A615-62T AND A305-56T. REINFORCING WIRE FABRIC - ASTM A185-61T.
19. REINFORCING WIRE FABRIC - ASTM A185-61T.

SCALE: NONE	CITY OF ST. HELENA	DATE: JUNE 19[illegible]
DRAWN: DRH	SAND AND GREASE INTERCEPTOR	STD. NO.
CHK:		216
APPVD:		

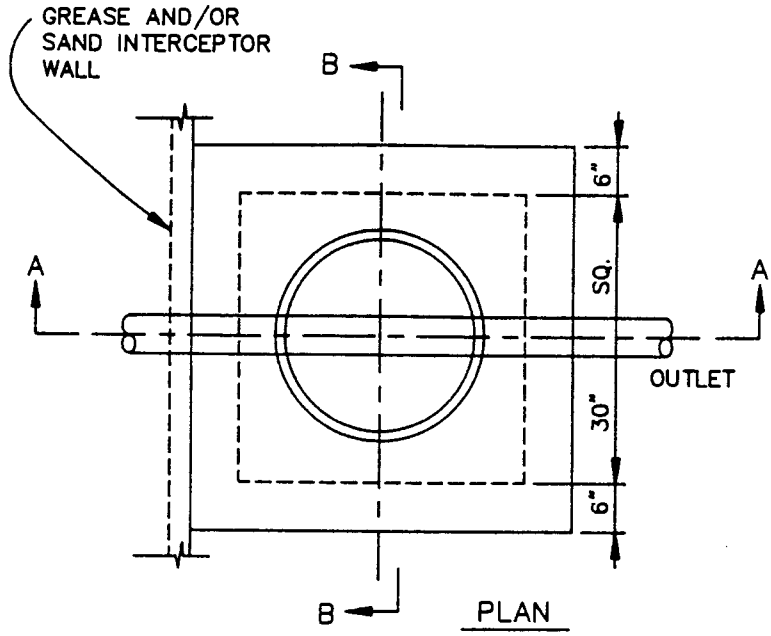

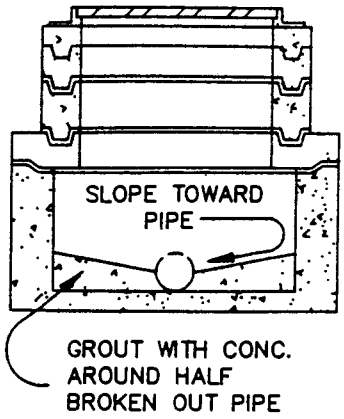

SECTION B–B

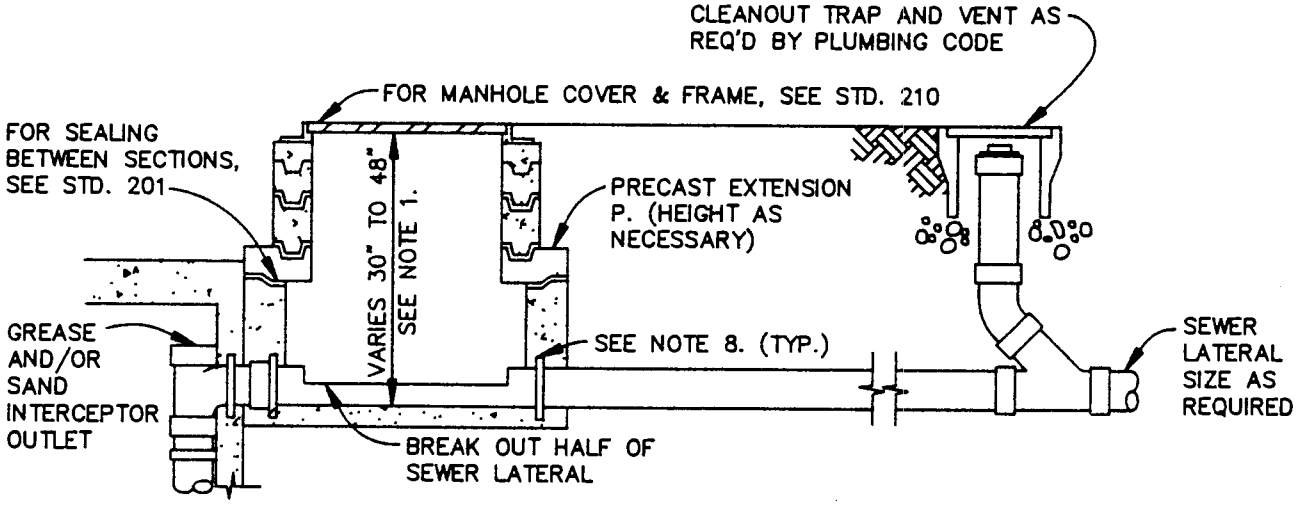

SECTION A–A

NOTES:

1. IF LESS THAN 30" DEEP, REVIEW WITH CITY ENGINEER FOR ADDITIONAL VAULT REQUIREMENTS. IF GREATER THAN 48", INSTALL SAMPLING MANHOLE SIMILAR TO STANDARD 201 WITH FLOW–THROUGH CUT–AWAY PIPE AS PER THIS STANDARD.
2. SAMPLING MANHOLE TO BE LOCATED OUTSIDE OF PUBLIC RIGHT OF WAY EXCEPT WITH WRITTEN APPROVAL OF THE CITY ENGINEER.
3. AN ALTERNATE DESIGN BY A REGISTERED ENGINEER MAY BE SUBMITTED FOR REVIEW BY THE CITY ENGINEER.
4. LOCATION SUBJECT TO THE APPROVAL OF THE CITY ENGINEER.
5. MANHOLE SHALL BE SANTA ROSA CAST PRODUCTS PRECAST CONCRETE DROP INLET BOX #5K WITH #5K X 24" DIAMETER TRANSITION SLAB.
6. ALL SURFACE WATER MUST DRAIN AWAY FROM SAMPLING MANHOLE.
7. SAMPLING MANHOLE TO BE USED IN CONJUNCTION WITH EITHER STANDARDS 215 OR 216.
8. A WATERSTOP CONSISTING OF A STANDARD MANHOLE ADAPTER GASKET AS SUPPLIED BY THE PIPE MANUFACTURER TO BE GROUTED INTO THE BOX WALL NEAR THE CENTER OF THE WALL.

SCALE: NONE	CITY OF ST. HELENA	DATE: JUNE 1993
DRAWN: DRH	SAMPLING MANHOLE EXTERIOR USE	STD. NO.
CHK:		217
APPVD:		

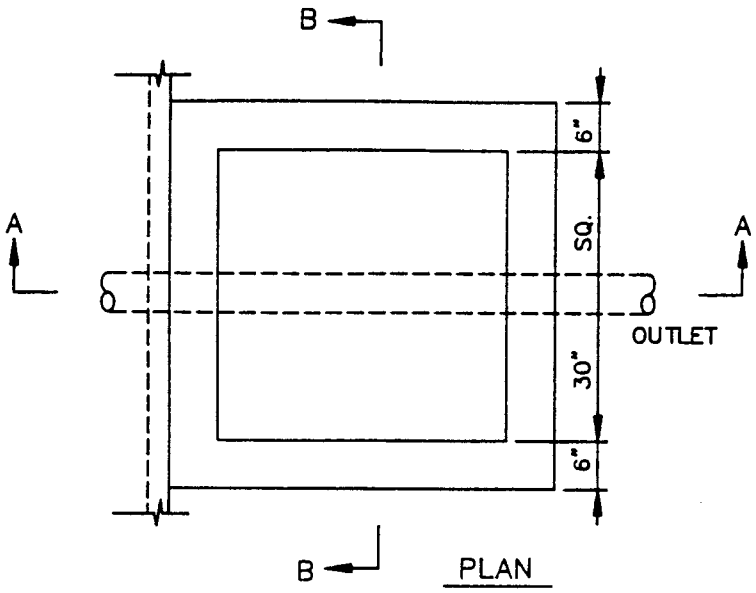

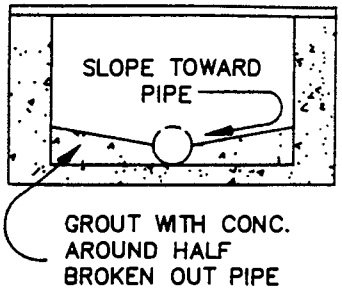

SECTION B–B

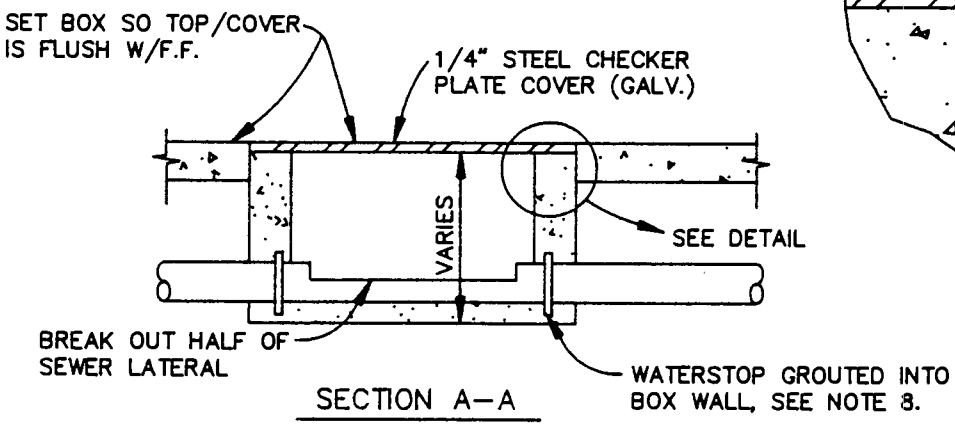

SECTION A–A

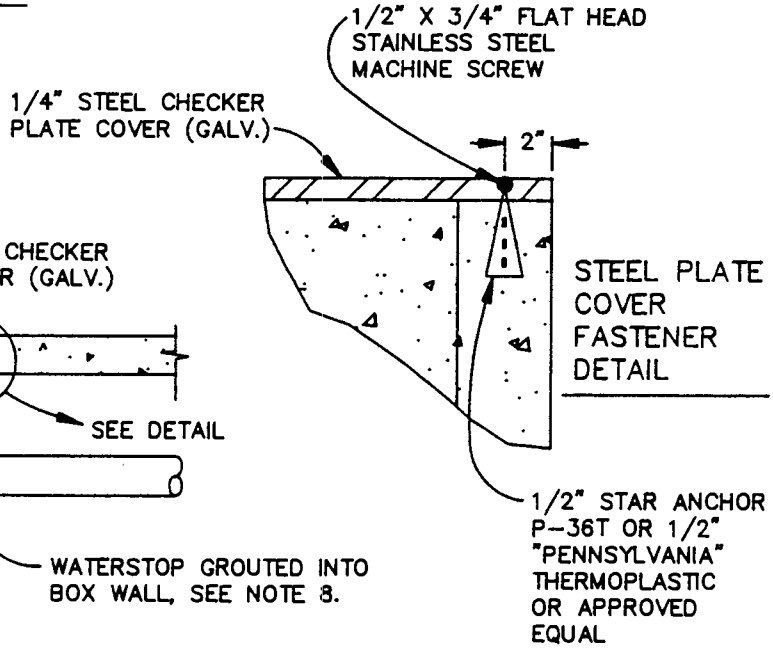

STEEL PLATE COVER FASTENER DETAIL

NOTES:

1. TO BE USED IN THE INTERIOR OF BUILDINGS IN CONJUNCTION W/SAMPLING MANHOLE AND TO BE UPSTREAM OF THE SAMPLING MANHOLE.
2. LOCATION SUBJECT TO THE APPROVAL OF THE CITY ENGINEER.
3. TO BE USED ONLY WITH THE APPROVAL OF THE CITY ENGINEER.
4. AN ALTERNATE DESIGN BY A REGISTERED ENGINEER MAY BE SUBMITTED FOR REVIEW BY THE CITY ENGINEER.
5. BOX SHALL BE SANTA ROSA CAST PRODUCTS MODEL 5K OR APPROVED EQUAL.
6. ALL SURFACE WATER MUST DRAIN AWAY FROM SAMPLING BOX.
7. SAMPLING BOX TO BE USED IN CONJUNCTION WITH EITHER STANDARDS 215 OR 216.
8. A WATERSTOP CONSISTING OF A STANDARD MANHOLE ADAPTER GASKET AS SUPPLIED BY THE PIPE MANUFACTURER TO BE GROUTED INTO THE BOX WALL NEAR THE CENTER OF THE WALL.

SCALE: NONE	CITY OF ST. HELENA	DATE: JUNE 1995
DRAWN: DRH	SAMPLING BOX BUILDING INTERIOR	STD. NO.
CHK:		218
APPVD:		

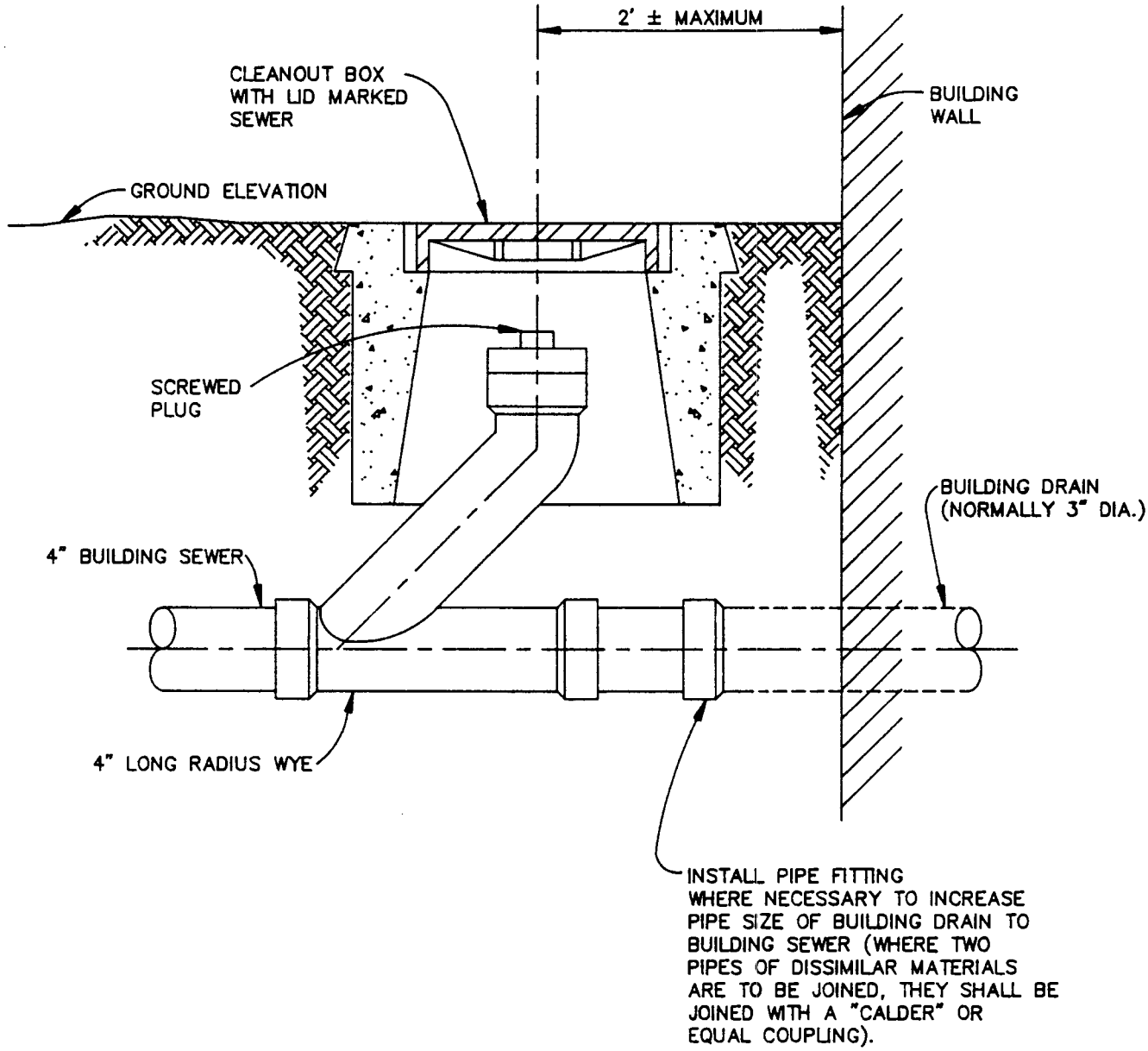

SCALE: NONE	CITY OF ST. HELENA	DATE: JUNE 1993
DRAWN: DRH	CLEANOUT DETAIL AT BUILDING	STD. NO.
CHK:		219
APPVD:		

NOTE: WHERE BUILDING SEWERS ARE LOCATED UNDER DRIVEWAYS, CAST IRON OR DUCTILE IRON SEWER PIPE SHALL BE USED.

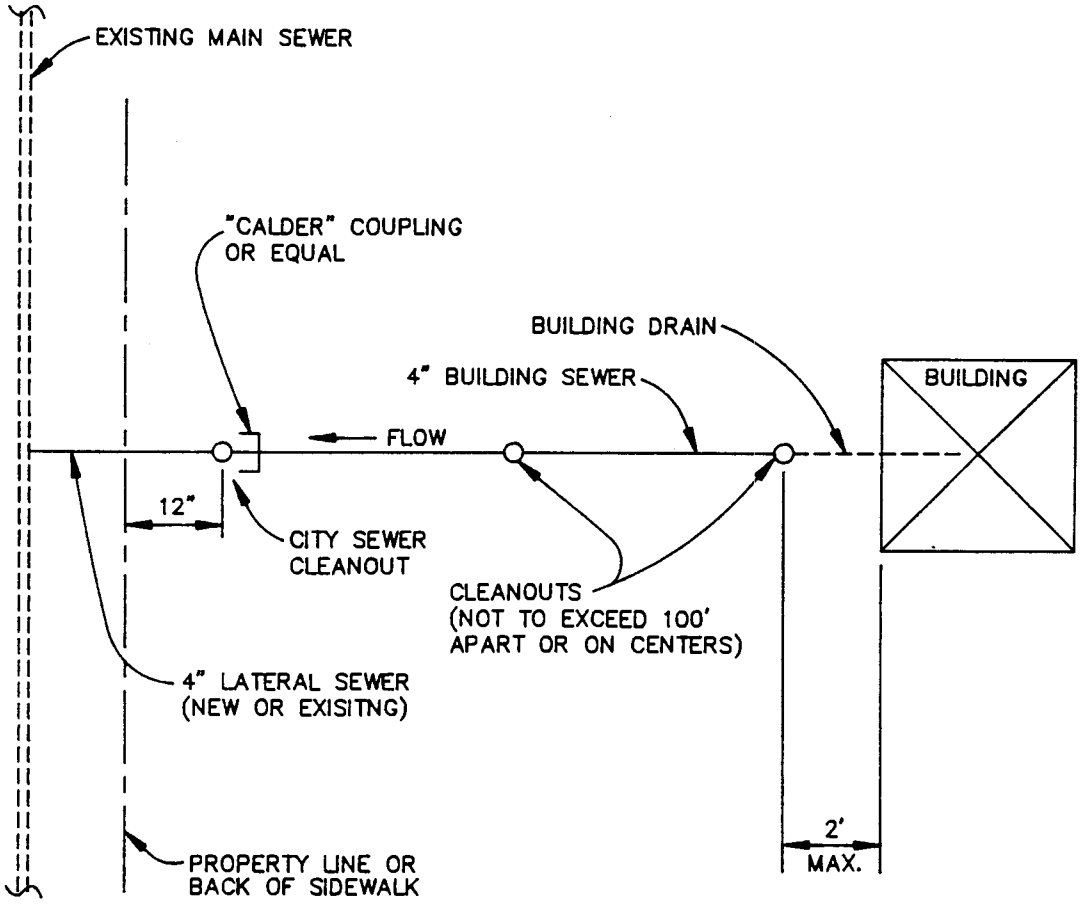

PLAN

SCALE: NONE	CITY OF ST. HELENA	DATE: JUNE 19[illegible]
DRAWN: DRH	TYPICAL SERVICE SEWER CONNECTION DETAILS	STD. NO. 220
CHK:		
APPVD:		

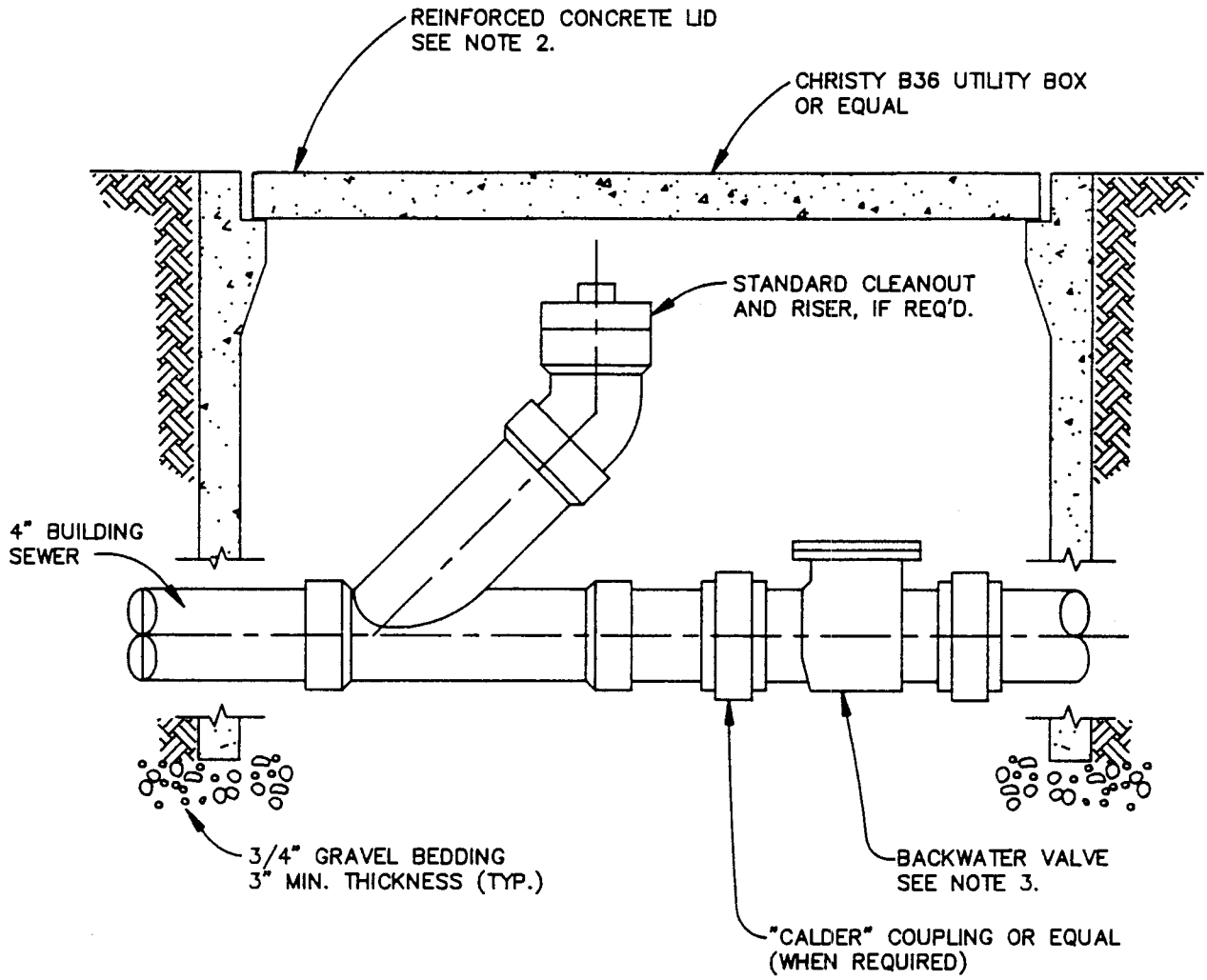

NOTES:

1. THIS INSTALLATION IS REQUIRED WHEREVER THE LOWEST FINISHED FLOOR ELEVATION IS TWELVE (12) INCHES, OR LESS, ABOVE THE TOP ELEVATION OF THE NEAREST UPSTREAM MANHOLE OR CLEANOUT.
2. IF THE LID IS SUBJECT TO VEHICULAR TRAFFIC, USE LID DESIGNED FOR H-20 TRAFFIC LOADINGS.
3. BACKWATER VALVE SHALL BE CAST IRON OR CAST BRONZE. VALVE SHALL BE APPROVED BY THE CITY ENGINEER.

SCALE: NONE	CITY OF ST. HELENA	DATE: JUNE 1993
DRAWN: DRH	BACKWATER CHECK VALVE INSTALLATION	STD. NO.
CHK:		221
APPVD:		

NOT USED

SCALE: NONE	CITY OF ST. HELENA	DATE: OCTOBER 2015
DRAWN: DRH	SERVICE SEWER TRENCH DETAIL	STD. NO. 222
CHK:		
APPVD:		

NEW SEWER

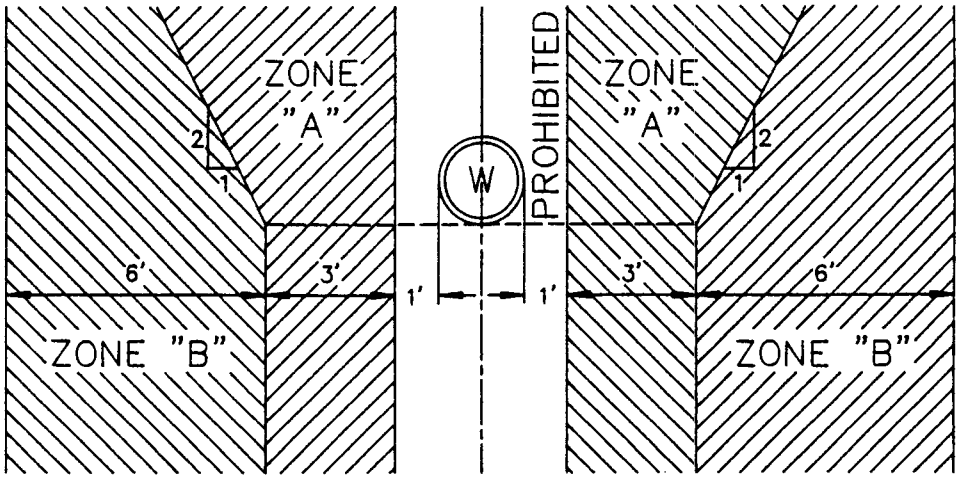

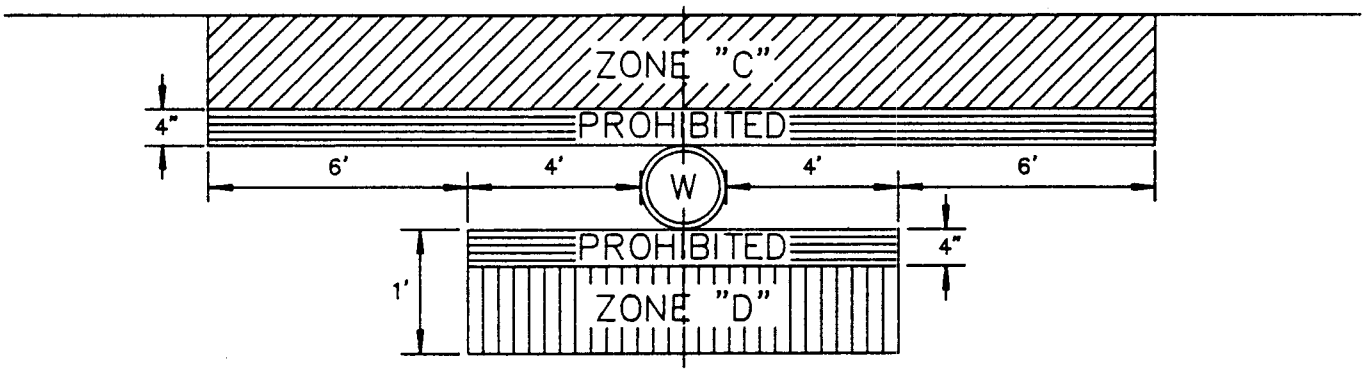

NEW SEWER BEING CONSTRUCTED

ZONE

A SEWER LINES PARALLEL TO WATER MAINS SHALL NOT BE PERMITTED IN THIS ZONE WITHOUT APPROVAL FROM THE RESPONSIBLE HEALTH AGENCY AND WATER SUPPLIER.

B A SEWER LINE PLACED PARALLEL TO A WATER LINE SHALL BE CONSTRUCTED OF:
1. EXTRA STRENGTH VITRIFIED CLAY PIPE WITH COMPRESSION JOINTS.
2. PLASTIC SEWER PIPE WITH RUBBER RING JOINTS (PER ASTM D3034) OR EQUIVALENT.
3. CAST OR DUCTILE IRON PIPE WITH COMPRESSION JOINTS.
4. REINFORCED CONCRETE PRESSURE PIPE WITH COMPRESSION JOINTS, (PER AWWA C300 OR C301 OR C303).

C A SEWER LINE CROSSING A WATER MAIN SHALL BE CONSTRUCTED OF:
1. DUCTILE IRON PIPE WITH HOT DIP BITUMINOUS COATING AND MECHANICAL JOINTS.
2. A CONTINUOUS SECTION OF CLASS 200 (DR 14 PER AWWA C900) PLASTIC PIPE OR EQUIVALENT, CENTERED OVER THE PIPE BEING CROSSED.
3. A CONTINUOUS SECTION OF REINFORCED CONCRETE PRESSURE PIPE (PER AWWA C302) CENTERED OVER THE PIPE BEING CROSSED.
4. ANY SEWER PIPE WITHIN A CONTINUOUS SLEEVE.

D A SEWER LINE CROSSING A WATER MAIN SHALL BE CONSTRUCTED OF:
1. A CONTINUOUS SECTION OF DUCTILE IRON PIPE WITH HOT DIP BITUMINOUS COATING.
2. A CONTINUOUS SECTION OF CLASS 200 (DR 14 PER AWWA C900) PLASTIC PIPE OR EQUIVALENT, CENTERED ON THE PIPE BEING CROSSED.
3. A CONTINUOUS SECTION OF REINFORCED CONCRETE PRESSURE PIPE (PER AWWA C302) CENTERED ON THE PIPE BEING CROSSED.
4. ANY SEWER PIPE WITHIN A CONTINUOUS SLEEVE.
5. ANY SEWER PIPE SEPARATED BY A TEN-FOOT BY TEN-FOOT, FOUR-INCH-THICK REINFORCED CONCRETE SLAB.

SCALE: NONE	**CITY OF ST. HELENA**	DATE: JUNE 1993
DRAWN: DRH	SEWER SEPARATION REQUIREMENTS	STD. NO.
CHK:		223
APPVD:		

STREET TYPES	LANE WIDTHS OF HALF STREET SECTIONS			
	r/w	parking	Lane	
4 LANE ARTERIAL TYPE "C" 92' R/W	10	12	24	
4 LANE ARTERIAL TYPE "E" 84' R/W	10	8	24	℄ ELEV. 0.32 HIGHER THAN T.C. ELEVATION
COLLECTOR TYPE "F" 60' R/W	10	8	12	℄ ELEVATION SAME AS T.C. ELEVATION
MINOR TYPE "G" 56' R/W	10	8	10	℄ ELEVATION SAME AS T.C. ELEVATION

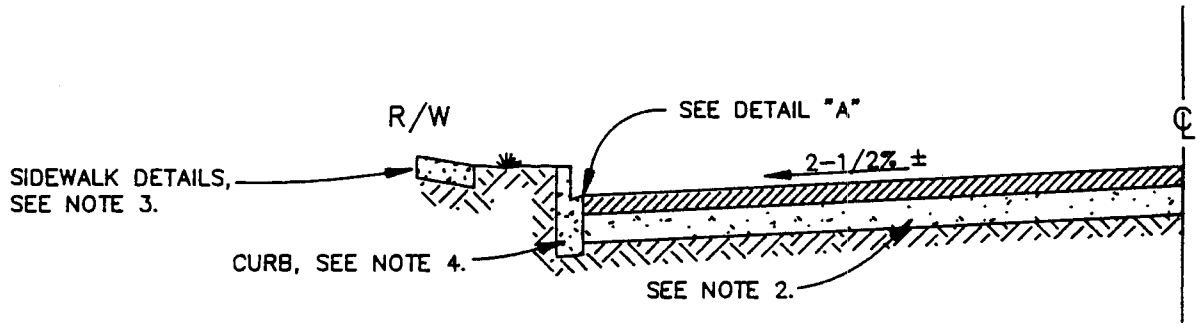

NOTES:

1. APPROVAL OF THE CITY ENGINEER WILL BE REQUIRED WHEN STREETS ARE NOT SYMETRICAL ABOUT THE CENTER LINE.
2. THE STRUCTURAL SECTIONS SHALL BE DETERMINED BY AN ENGINEERING ANALYSIS USING CITY STDS 302 AND 303.
3. SEE STD. 315 FOR SIDEWALK DETAILS.
4. SEE STD. 310 FOR CURB & GUTTER DETAILS.
5. MEDIAN SURFACE FINISH TO BE SHOWN ON PLANS AND SPECIFICATIONS.

DETAIL "A"

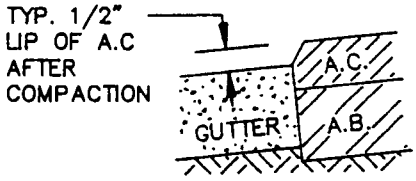

SCALE: NONE	CITY OF ST. HELENA	DATE: NOV. 1993
DRAWN: DRH	STANDARD HALF STREET SECTIONS	STD. NO.
CHK:		301
APPVD:		

STRUCTURAL DESIGN CHART
FOR FLEXIBLE PAVEMENTS

EQUATION:
G.E. = 0.0032 (T.I.)(100−R)

G.E. = GRAVEL EQUIVALENT
T.I. = TRAFFIC INDEX
R = RESISTANCE VALUE

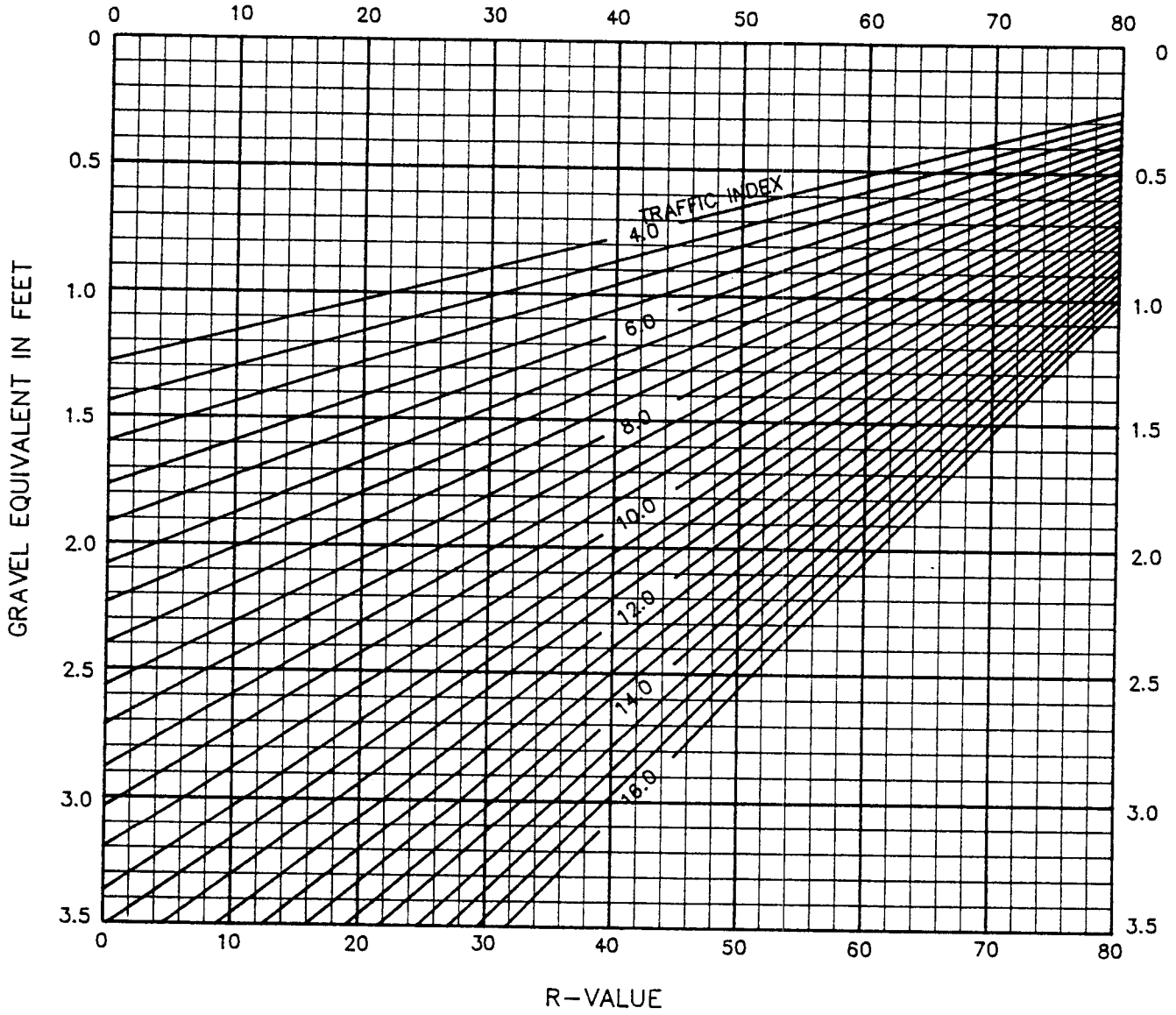

SCALE: NONE	CITY OF ST. HELENA	DATE: NOV. 199_
DRAWN: DRH	STRUCTURAL DESIGN CHART FOR FLEXIBLE PAVEMENTS	STD. NO.
CHK:		302
APPVD:		

CHART FOR ESTIMATION OF TRAFFIC INDEX USING A HOUSE COUNT

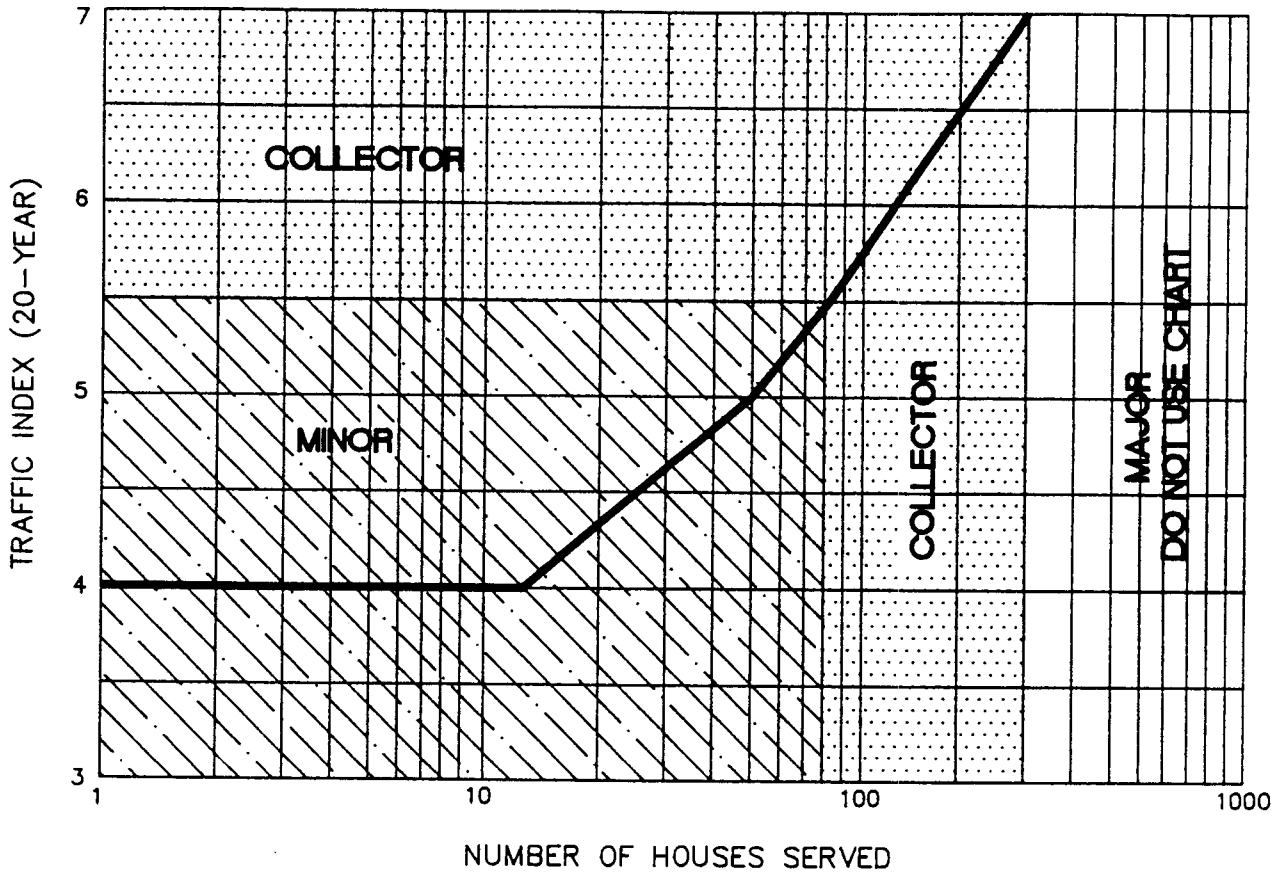

T.I. = 2,472 (HOUSES)0.1825

MIN. T.I. = 4.0

NOTES:

FOR USE WITHIN SUBDIVISIONS, RESIDENTIAL AND RESIDENTIAL COLLECTOR STREETS.
FOR ALL OTHER STREETS, THE T.I. WILL BE DETERMINED BY THE CITY ENGINEER.

CHART IS BASED ON A 20 YEAR DESIGN LIFE.

SCALE: NONE	**CITY OF ST. HELENA**	DATE: NOV. 1993
DRAWN: DRH	TRAFFIC INDEX CHART FOR FLEXIBLE PAVEMENTS	STD. NO. 303
CHK:		
APPVD:		

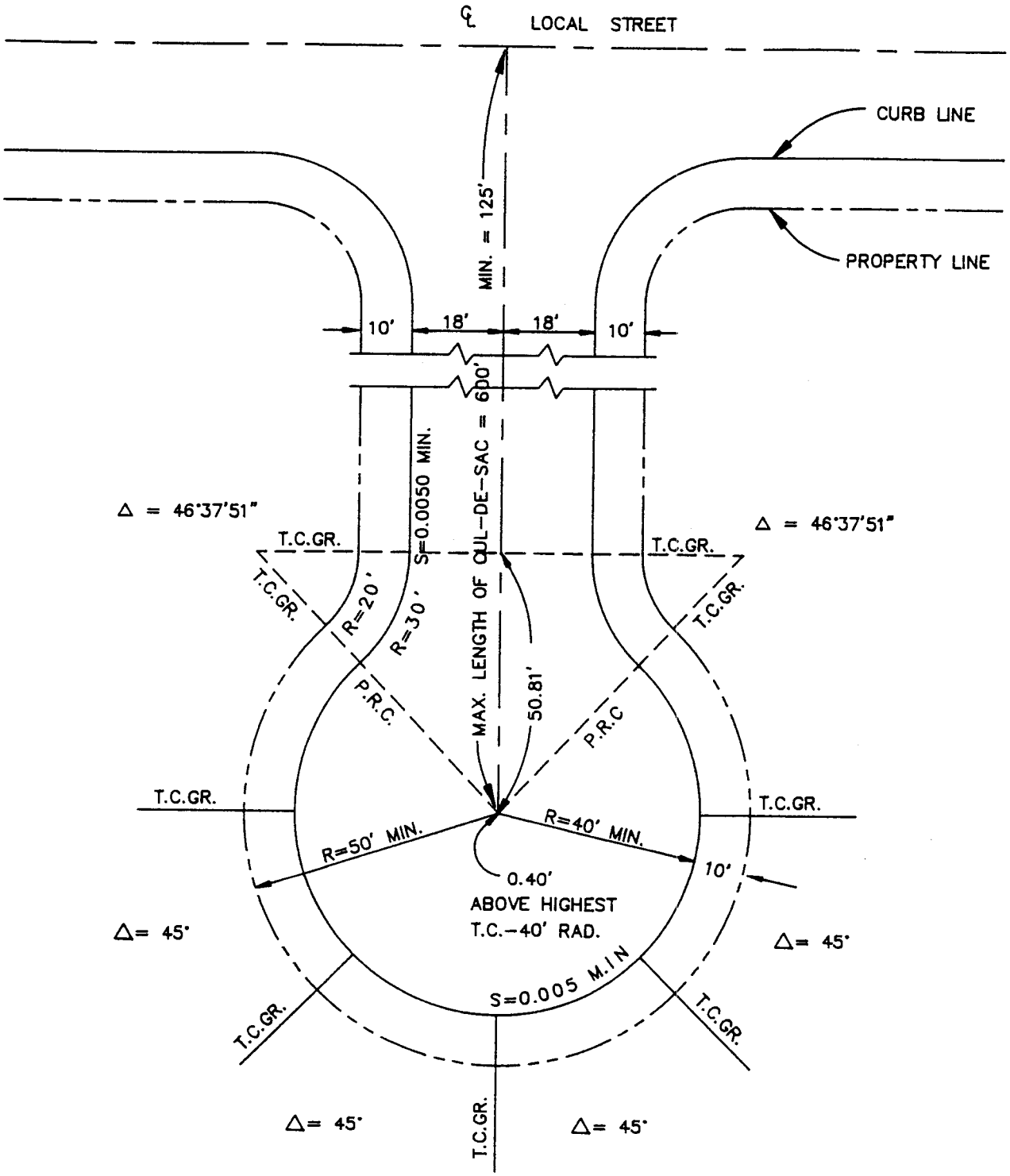

SCALE: NONE	CITY OF ST. HELENA	DATE: NOV. 1995
DRAWN: DRH	TYPICAL CUL-DE-SAC	STD. NO. 304
CHK:		
APPVD:		

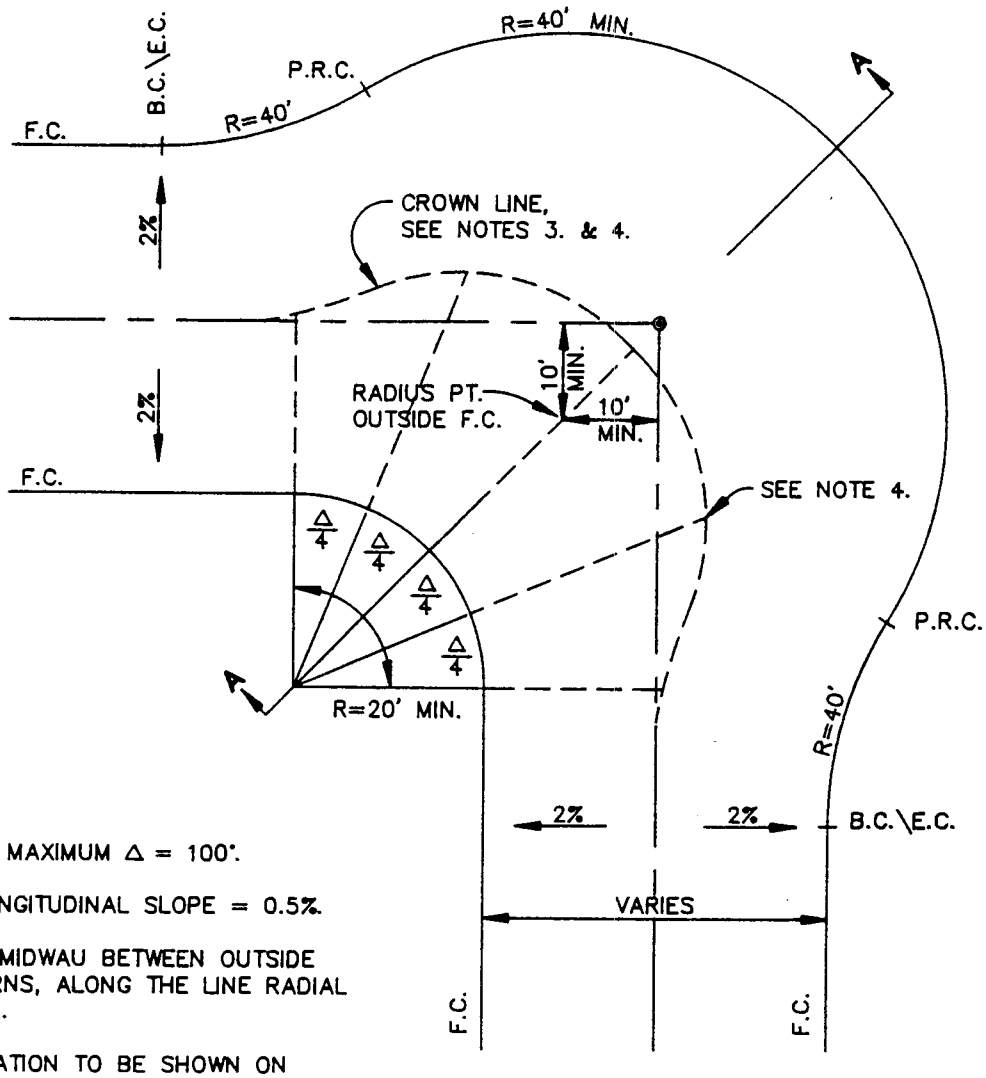

NOTES:

1. MINIMUM Δ = 60°, MAXIMUM Δ = 100°.
2. MINIMUM CURB LONGITUDINAL SLOPE = 0.5%.
3. CROWN LINE LIES MIDWAU BETWEEN OUTSIDE AND INSIDE RETURNS, ALONG THE LINE RADIAL TO INSIDE RETURN.
4. CROWN LINE ELEVATION TO BE SHOWN ON THE PLANS.
5. DESIGN SHALL CONFORM TO THESE REQUIREMENTS EXCEPT AS OTHERWISE APPROVED BY THE CITY ENGINEER.

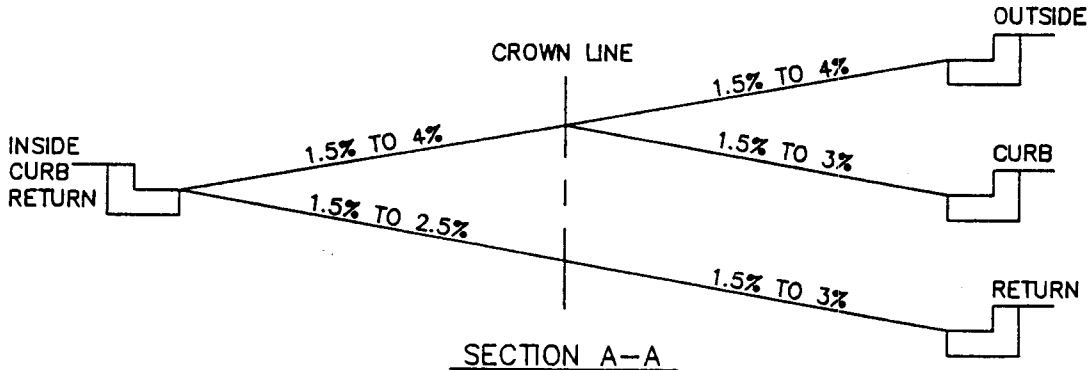

SECTION A–A
MAXIMUM & MINIMUM CROSS SLOPES

SCALE: NONE	CITY OF ST. HELENA	DATE: NOV. 1993
DRAWN: CKM	STANDARD STREET KNUCKLE RESIDENTIAL & MINOR STREETS	STD. NO.
CHK:		305
APPVD:		

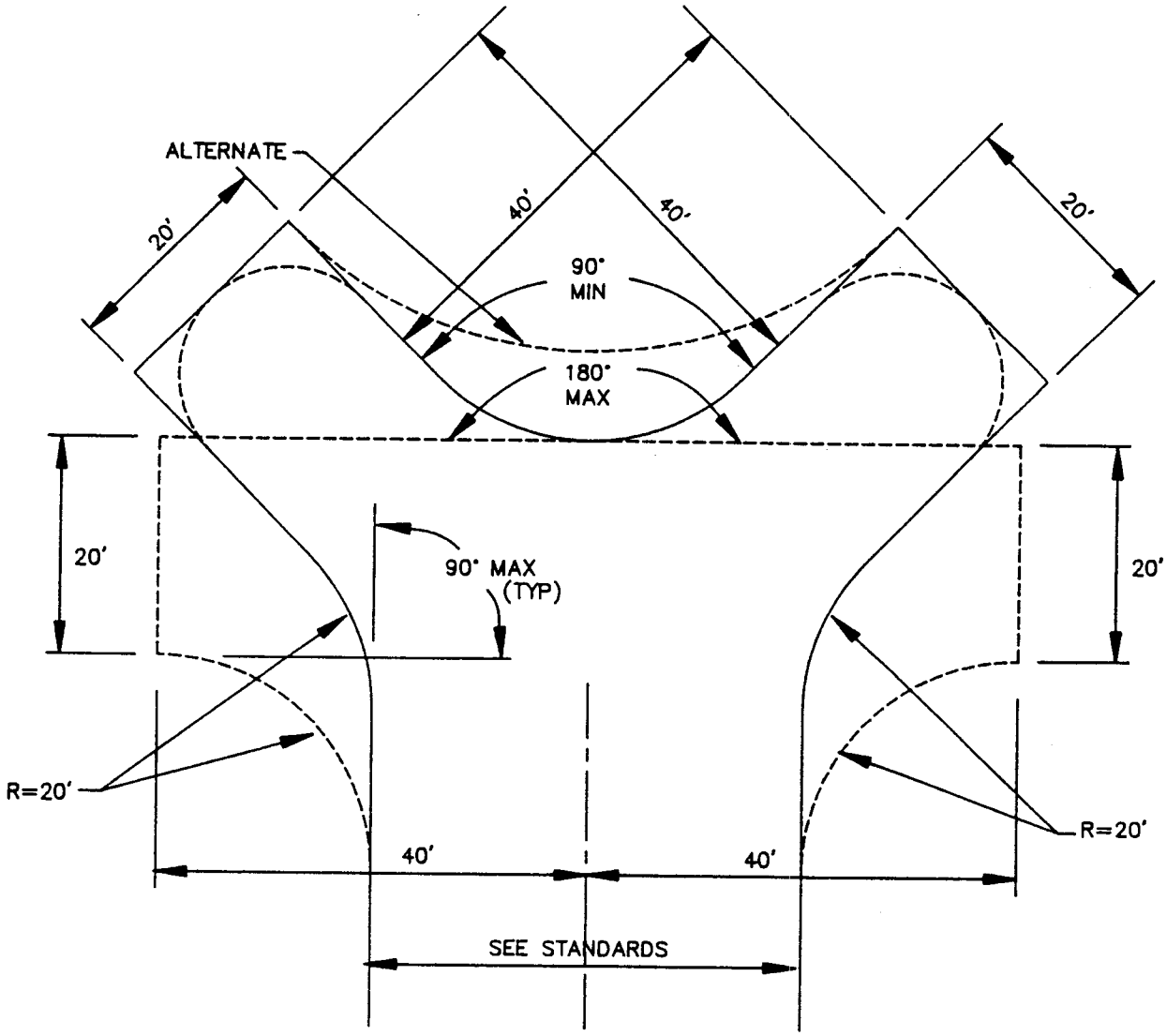

TO BE USED ONLY WHEN
SPECIFICALLY AUTHORIZED

SCALE: NONE	**CITY OF ST. HELENA**	DATE: NOV. 19[illegible]
DRAWN: DRH	HAMMERHEAD TURN AROUND RESIDENTIAL PRIVATE STREETS AND ACCESS WAYS	STD. NO.
CHK:		306
APPVD:		

CITY HALL, 1480 MAIN STREET
ST. HELENA, CALIFORNIA 94574
(707) 963-2741

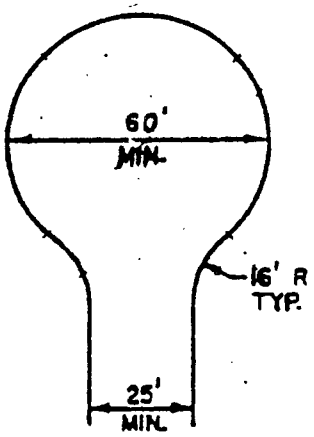

CUL-DE-SAC
(No Parking)

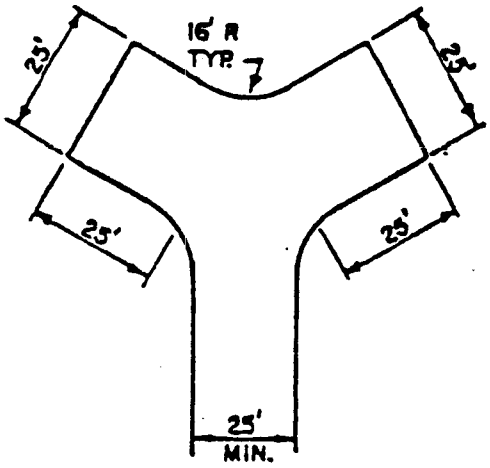

120° HAMMERHEAD
(No Parking)

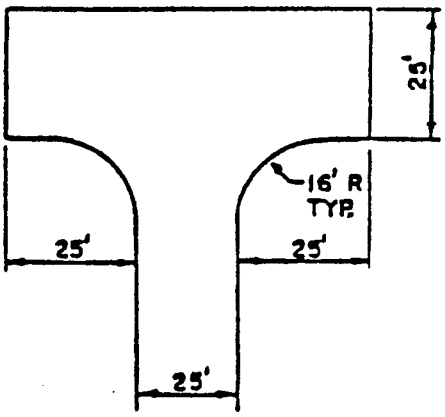

HAMMERHEAD

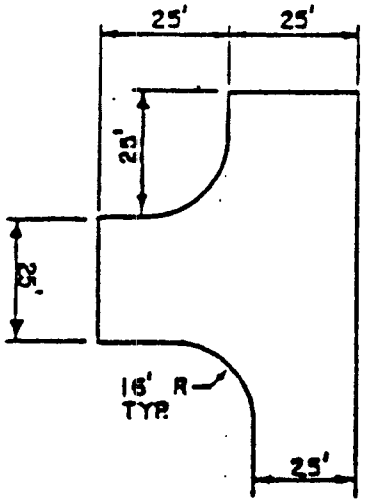

Emergency Vehicle Turn-Arounds
Private Street Standards

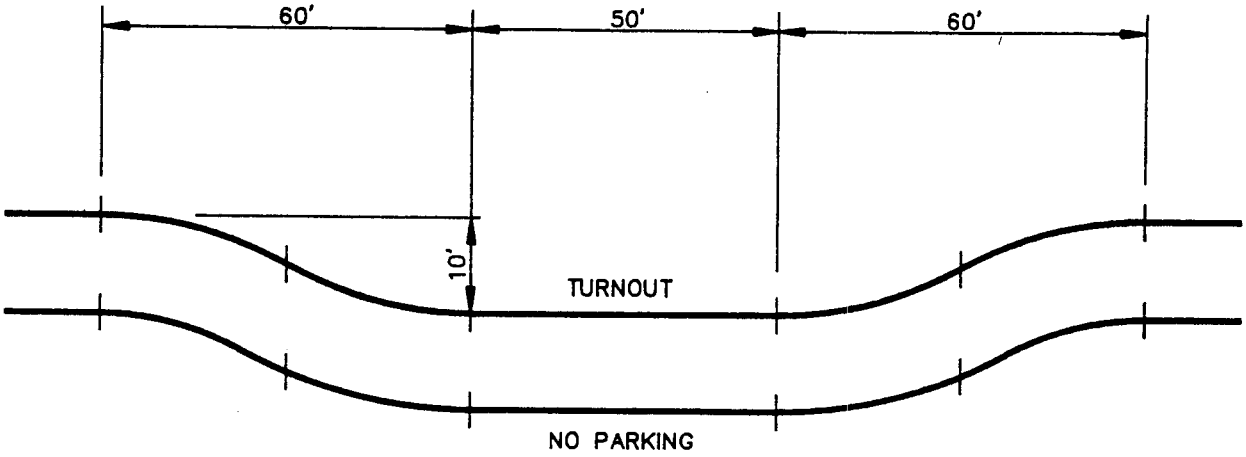

NOTES:

1. EMERGENCY TURNOUT TO BE USED AS APPROVED BY THE CITY ENGINEER.
2. DESIGN SHALL CONFORM TO THESE REQUIREMENTS EXCEPT AS OTHERWISE APPROVED BY THE CITY ENGINEER.

SCALE: NONE	CITY OF ST. HELENA	DATE: NOV. 19__
DRAWN: DRH	EMERGENCY VEHICLE TURNOUT	STD. NO.
CHK:		307
APPVD:		

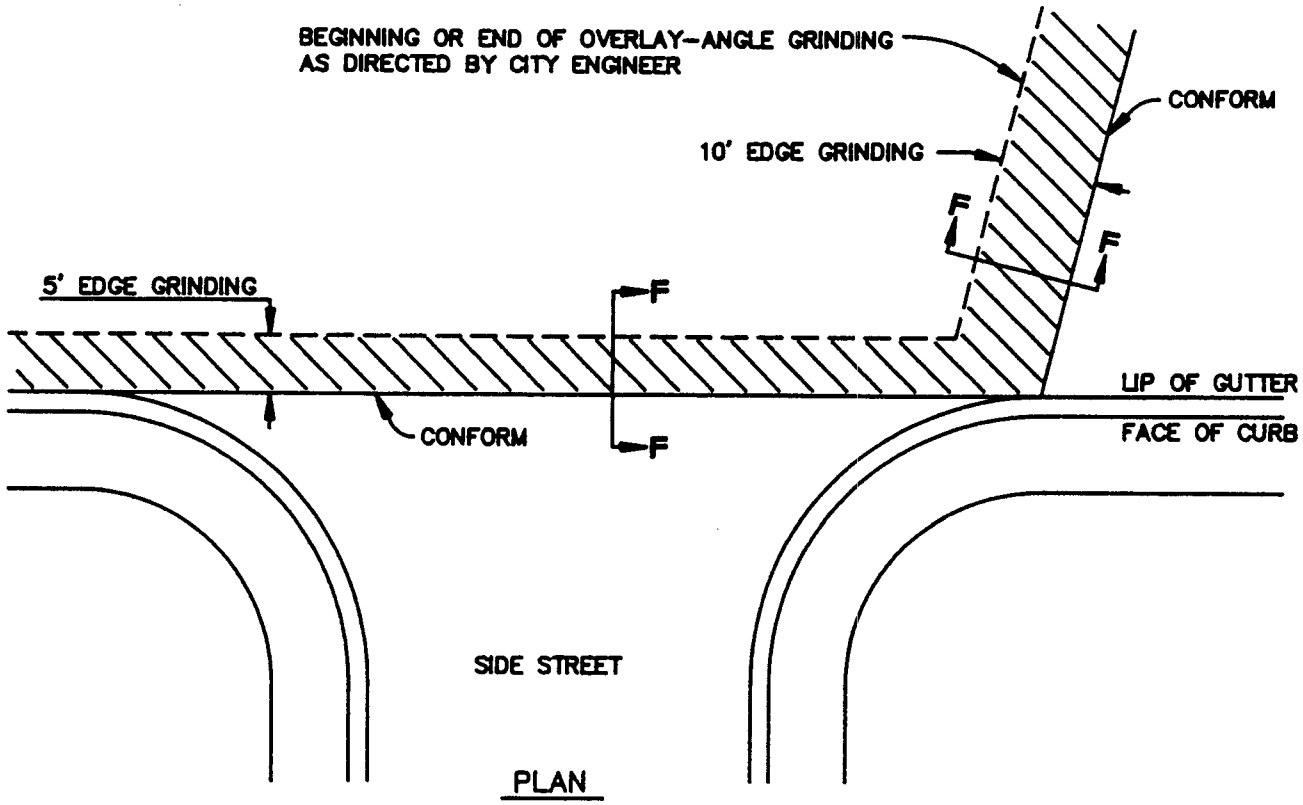

PLAN

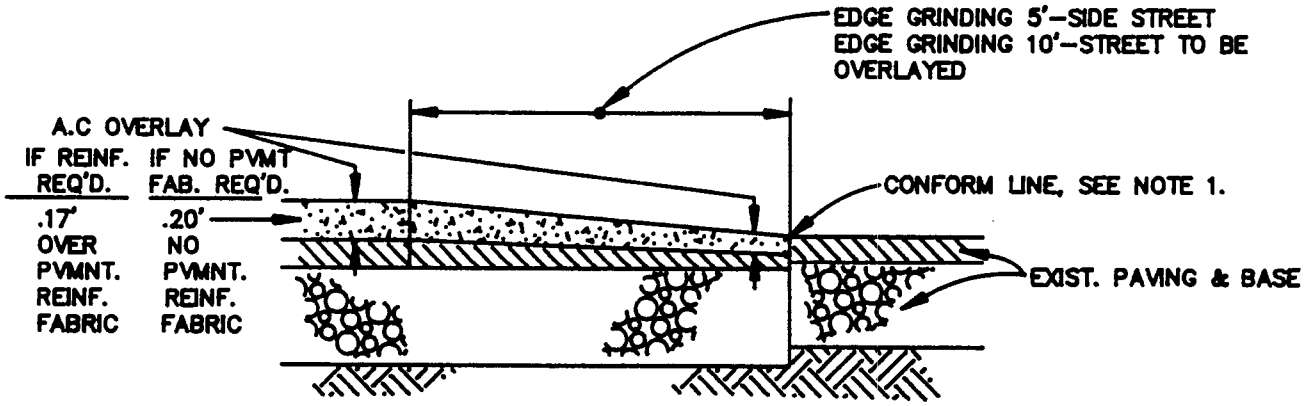

SECTION F–F

NOTES:

1. EDGE GRINDING SHALL BE 1"±1/4".
2. DESIGN SHALL CONFORM TO THESE REQUIREMENTS EXCEPTS AS OTHERWISE APPROVED BY THE CITY ENGINEER.
3. CRACK SEALING & LEVELING COARSES SHALL BE INSTALLED PER CITY ENGINEERS REQUIREMENTS.

REV. 11–11–94 APROV. _____

SCALE: NONE	CITY OF ST. HELENA	DATE: NOV. 1993
DRAWN: DRH	SIDE STREET AND END OF OVERLAY CONFORM	STD. NO. 308
CHK:		
APPVD:		

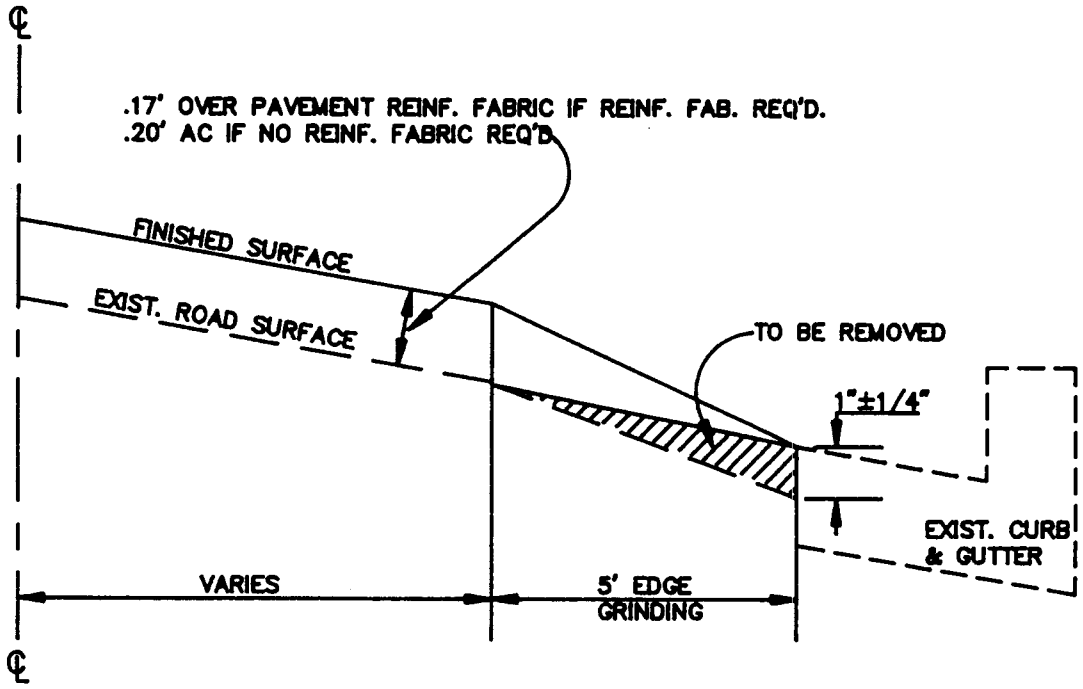

NOTES:

1. DESIGN SHALL CONFORM TO THESE REQUIREMENTS EXCEPT AS OTHERWISE APPROVED BY THE CITY ENGINEER.

REV. 11-11-94 APROV. _____

SCALE: NONE	CITY OF ST. HELENA	DATE: NOV. 1[illegible]
DRAWN: DRH	EDGE GRINDING AT LIP OF GUTTER WITH OVERLAY SECTION	STD. NO. 309
CHK:		
APPVD:		

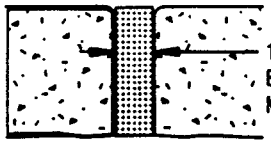

TYP. EXPANSION JOINT

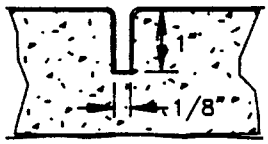

TYP. WEAK PLANE JOINT

NOTE: EDGER FINISH ALL
EXP. & W.P. JOINTS

BACKFILL FULL HEIGHT
BEHIND ALL CURBS
(TYP.)

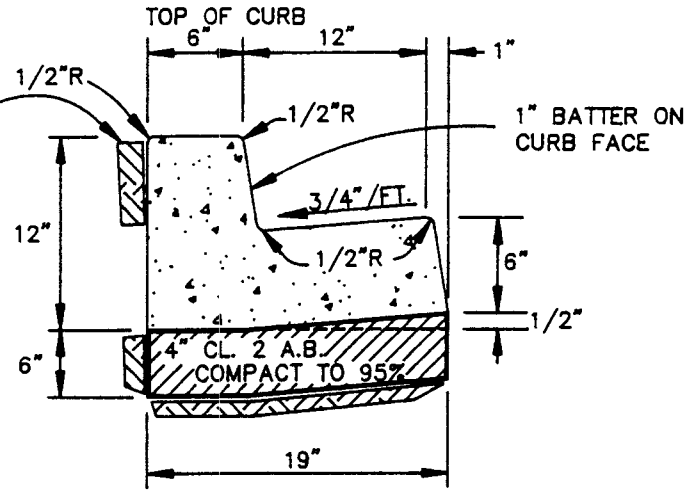

STANDARD CURB & 12" GUTTER

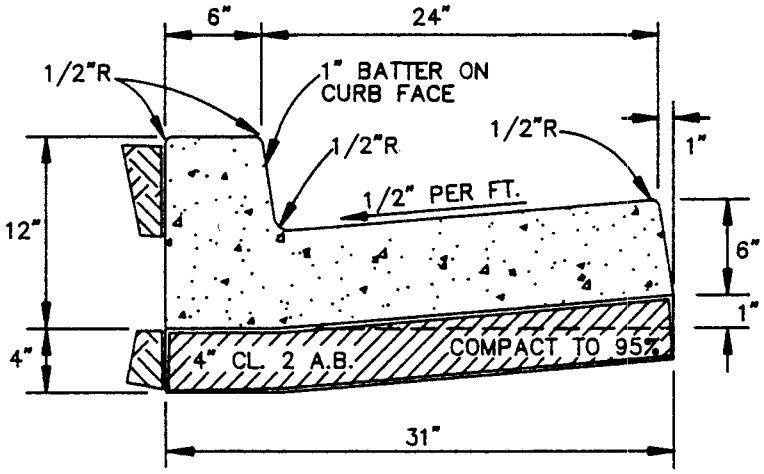

STANDARD CURB & 24" GUTTER

NOTE:

1. ALL CURBS ON PRIVATE STREETS AND PARKING LOTS SHALL BE TO CITY STANDARDS.
2. ALL CONCRETE SHALL BE CLASS "A" (6 SACKS/CU. YARD).
3. CONCRETE SHALL BE BRUSH FINISHED PARALLEL TO FACE OF CURB.
4. ALL CURBS SHALL BE BACKFILLED BEFORE STREET IS ROCKED AND PAVED.
5. CL. 2 A.B. AND FILL MATERIAL, IF ANY, SHALL HAVE A MINIMUM OF 95% RELATIVE COMPACTION UNDER CURB & GUTTER, PLACED AGAINST UNDISTURBED NATIVE SOIL.
6. ON STRAIGHT RUN OF STANDARD CURB & GUTTER, 1/2" EXPANSION JOINTS SHALL BE INSTALLED 40'; AND WEAK PLANE JOINTS INSTALLED MIDWAY BETWEEN EXPANSION JOINTS.
7. FOR EXPANSION JOINT AND WEAK PLANE JOINT AT CURB RETURNS, SEE STDS 317 & 318; AT CATCH BASIN, SEE STDS 509 & 511.

SCALE: NONE	CITY OF ST. HELENA	DATE: NOV. 1993
DRAWN: DRH	STANDARD CURB & GUTTER	STD. NO.
CHK:		310
APPVD:		

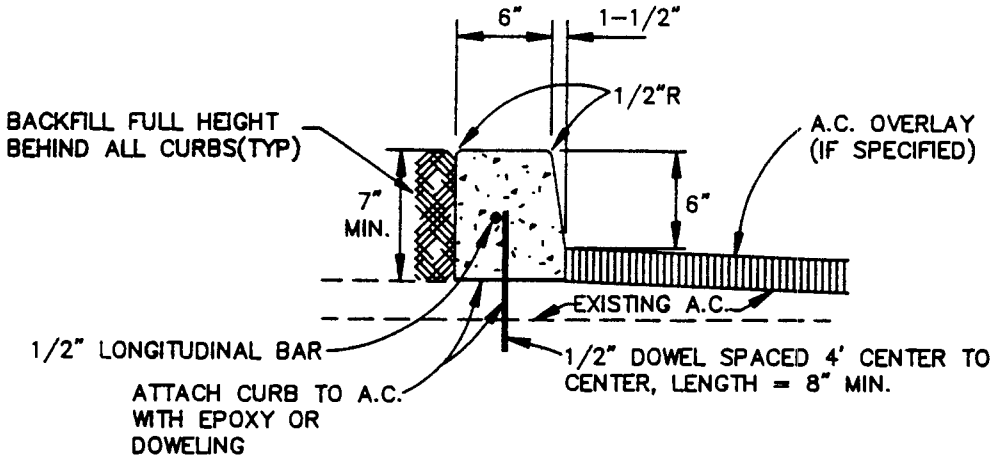

CONC VERTICAL CURB OVER EXIST PAVING

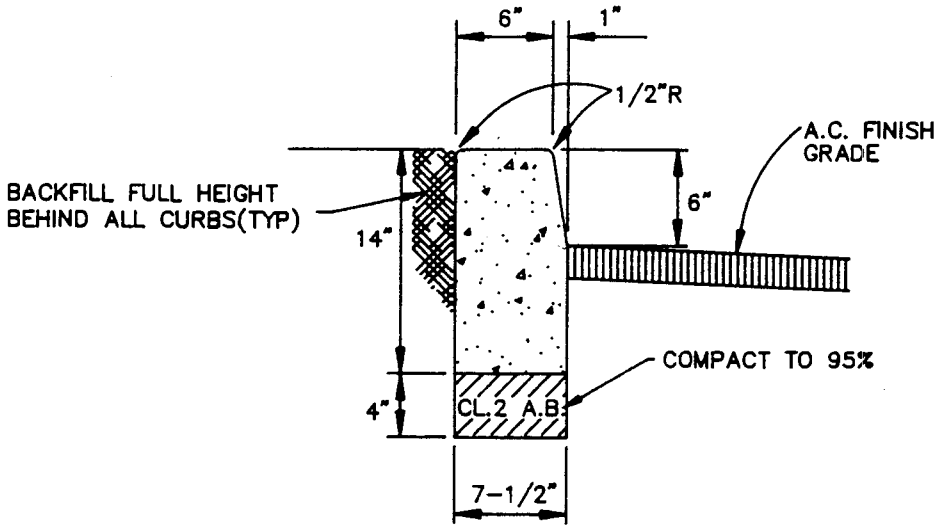

CONC VERTICAL CURB

NOTES:

1. ALL CURBS INSTALLED ON PRIVATE PROPERTY SHALL BE TO CITY STANDARDS.
2. ALL CONCRETE SHALL BE CLASS "A" (6 SACKS/CU. YARD).
3. CONCRETE SHALL BE BRUSH FINISHED PARALLEL TO FACE OF CURB.
4. ALL CURBS SHALL BE BACKFILLED BEFORE STREET IS ROCKED AND PAVED.
5. CL. 2 A.B. AND FILL MATERIAL, IF ANY, SHALL HAVE A MINIMUM OF 95% RELATIVE COMPACTION UNDER CURB.
6. ON STRAIGHT RUN OF CURB, 1/2" EXPANSION JOINTS SHALL BE INSTALLED EVERY 40LF MIN, AND WEAK PLANE LOINTS INSTALLED MIDWAY BETWEEN EXPANSION JOINTS.

SCALE: NONE	CITY OF ST. HELENA	DATE: NOV. 199[illegible]
DRAWN: DRH	STANDARD VERTICAL CURB	STD. NO.
CHK:		311
APPVD:		

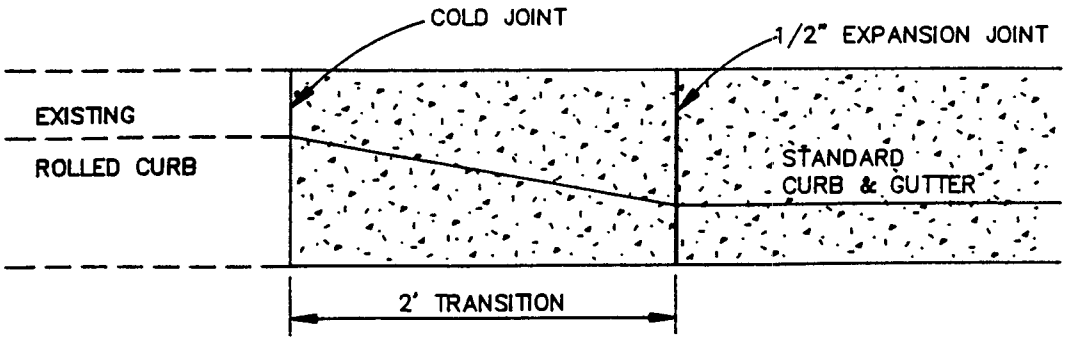

PLAN VIEW

TRANSITION IN STRAIGHT CURB

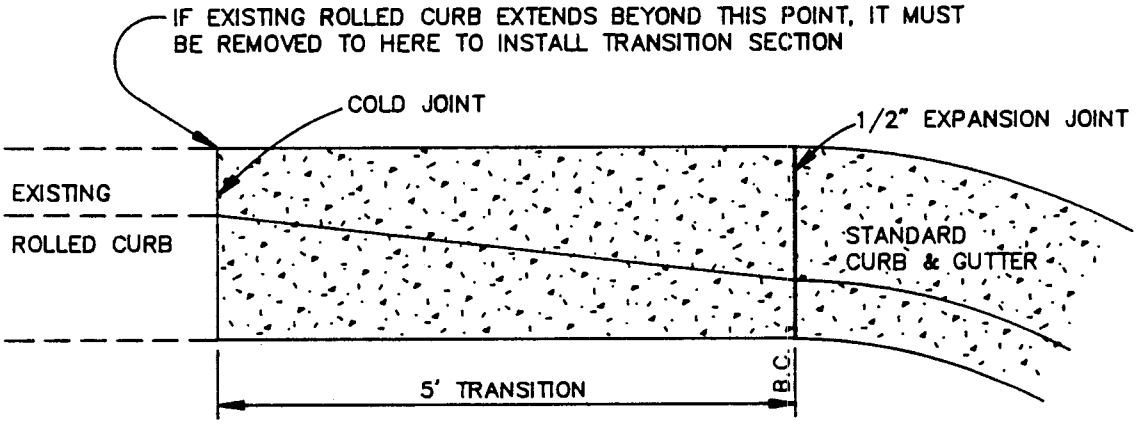

PLAN VIEW

TRANSITION AT CURB RETURN

SCALE: NONE	**CITY OF ST. HELENA**	DATE: NOV. 1993
DRAWN: DRH	TRANSITION DETAIL ROLLED CURB TO STANDARD CURB & GUTTER	STD. NO.
CHK:		312
APPVD:		

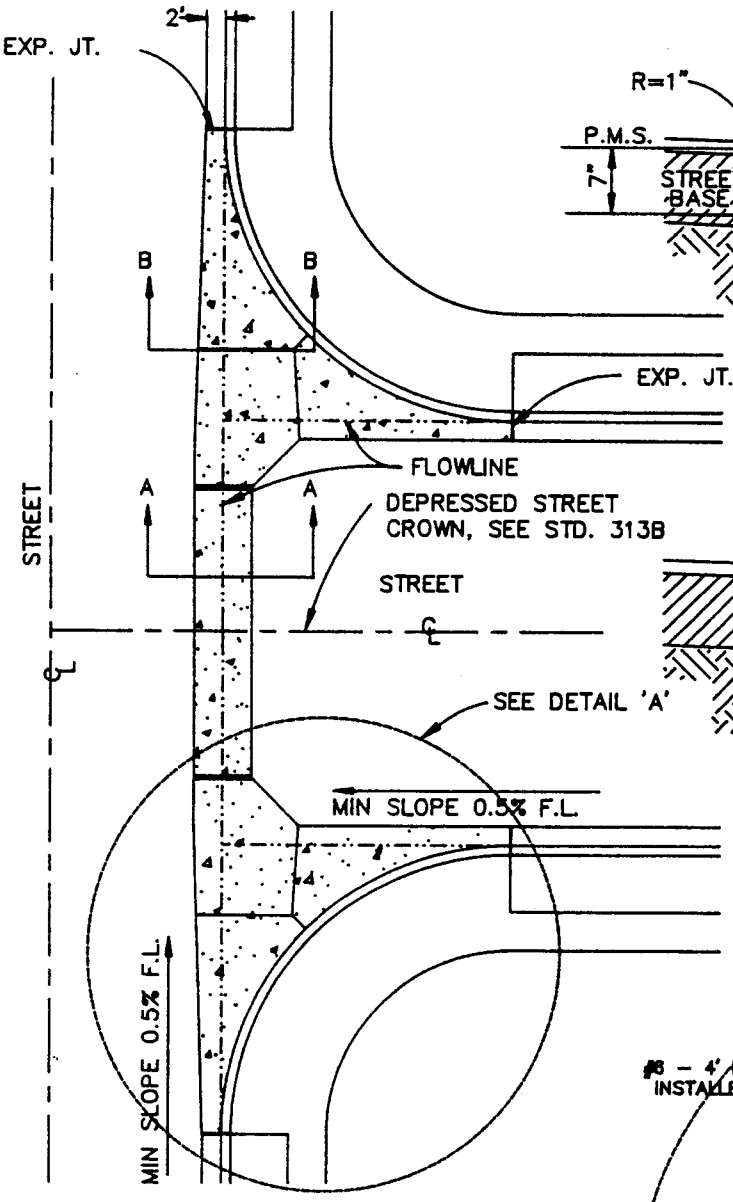

TYP. CROSS-GUTTER PLAN

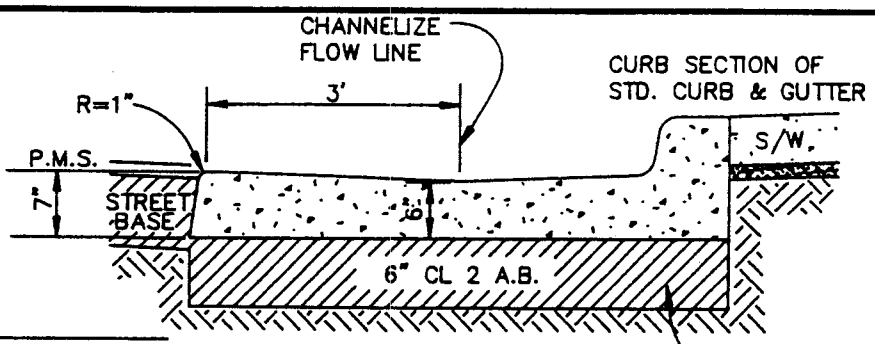

SECTION B-B

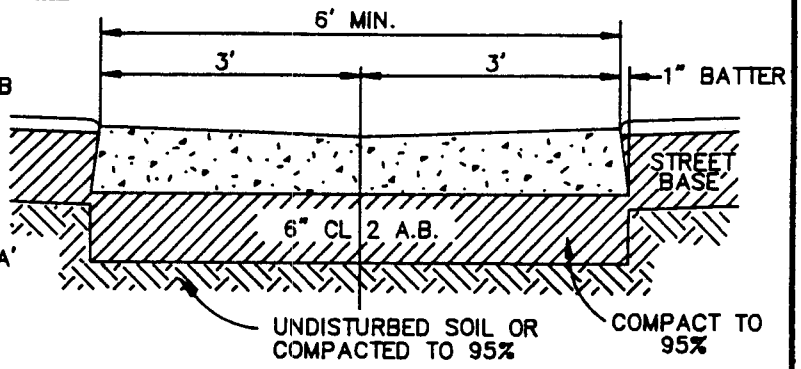

SECTION A-A

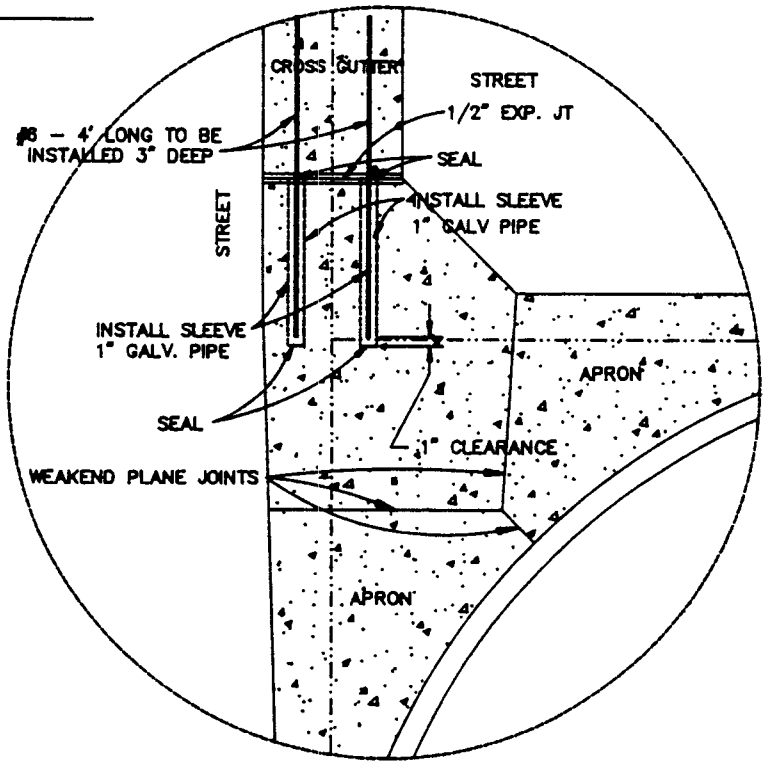

DETAIL "A"
TYPICAL BOTH SIDES

NOTE:
ALL CONCRETE TO BE CLASS "A"
(6 SACK/CU. YARD)

LEGEND

EXP. JOINT	1/2" EXPANSION JOINT
	AREA OF APRON & CROSS GUTTER

REV. 11-11-94 APROV. MSD

SCALE: NONE	CITY OF ST. HELENA	DATE: NOV. 19[illegible]
DRAWN: DRH	STANDARD P.C.C. CROSS GUTTER	STD. NO.
CHK:		313A
APPVD: MSD		

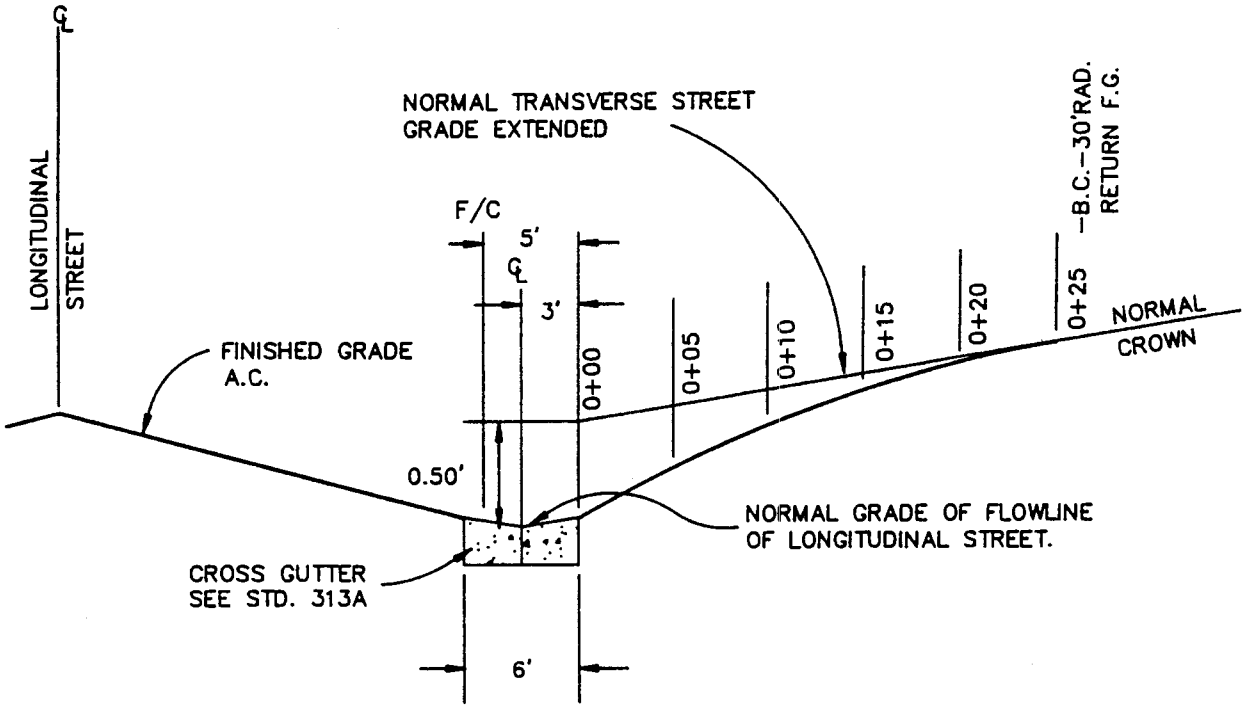

PROFILE ALONG ℄ TRANSVERSE STREET

NOTE:

ORDINATES, IN DECIMAL PARTS OF A FOOT, ESTABLISH THE DISTANCE OF THE PAVEMENT SURFACE OF THE TRANSVERSE STREET BELOW THE NORMAL STREET GRADE, FROM STA 0+00 TO 0+25.

A.C. SURFACING						
STA	0+00	0+05	0+10	0+15	0+20	0+25
ORDIN	0.42	0.31	0.20	0.09	0.02	0.00

SCALE: NONE	**CITY OF ST. HELENA**	DATE: NOV. 1993
DRAWN: DRH	STANDARD STREET PROFILE AT P.C.C. CROSS GUTTER	STD. NO.
CHK:		313B
APPVD:		

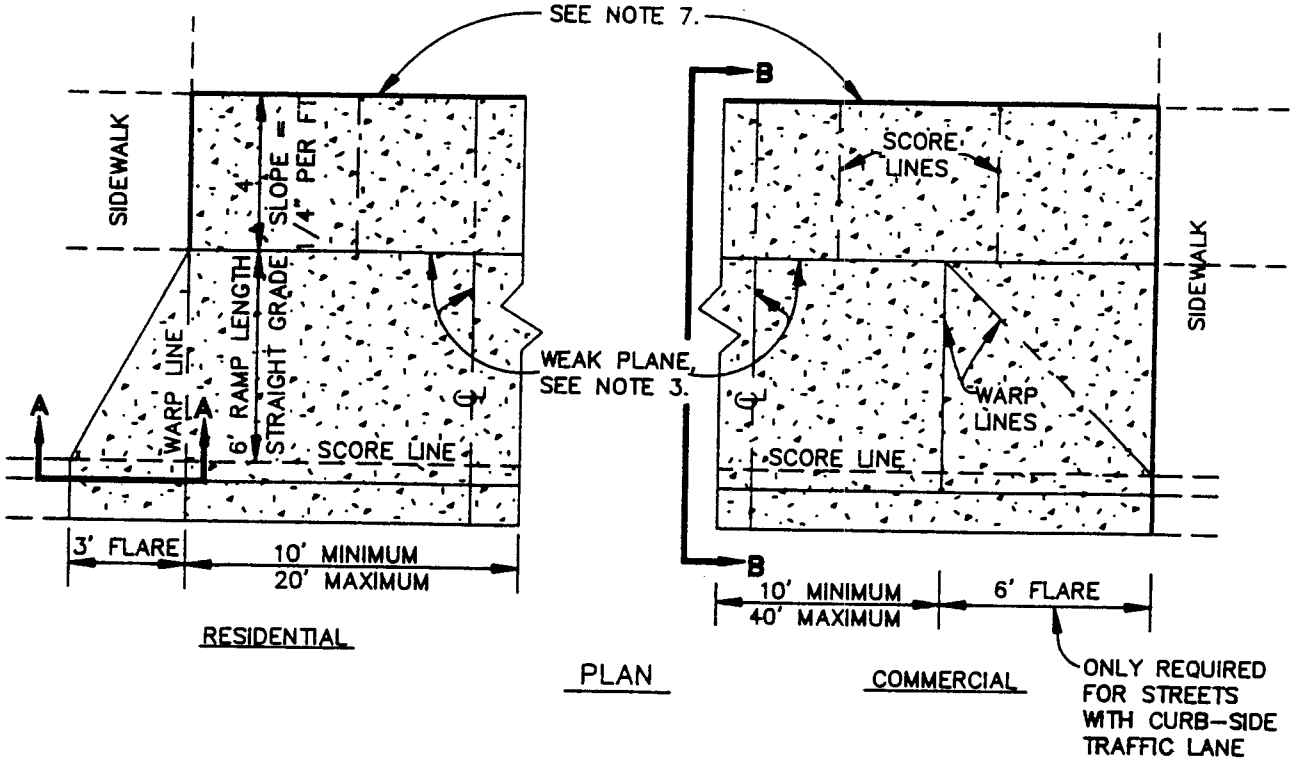

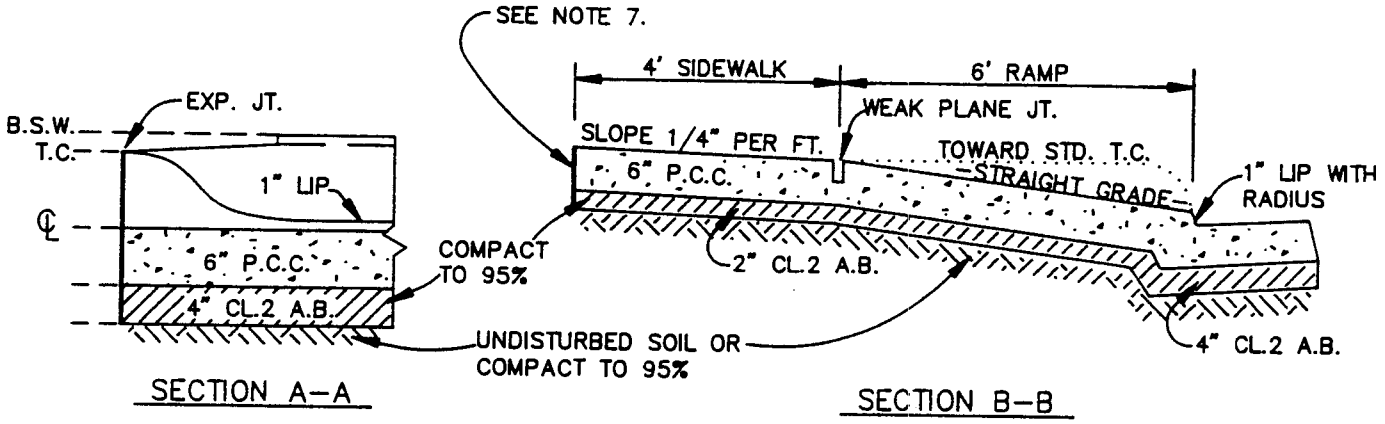

NOTES:

1. EXISTING CURB, GUTTER, AND SIDEWALK SHALL BE CUT AT THE FIRST SCORE LINE BEYOND THE NEW DRIVEWAY LOCATION WITH AN ABRASIVE TYPE SAW TO A MINIMUM DEPTH OF 1-1/2". THE OLD CURB, GUTTER, AND SIDEWALK SHALL BE ENTIRELY REMOVED AND REPLACED WITH CLASS "A" (6 SACK/CU.YD.) CONCRETE AS SHOWN.
2. 1/2" EXPANSION JOINT MATERIAL SHALL BE PLACED ALONG EACH SIDE OF ALL NEW DRIVEWAY APPROACHES. WHERE SIDEWALKS, CURBS AND GUTTERS ARE EXISTING, COLD JOINTS MAY BE SUBSTITUTED.
3. A TRANSVERSE WEAK PLANE JOINT SHALL BE INSTALLED ON THE CENTERLINE OF ALL DRIVEWAYS 20' OR MORE IN WIDTH. THE LONGITUDINAL LINE AS SHOWN SHALL BE A WEAK PLANE JOINT 4' FROM BACK OF SIDEWALK, SCORE LINES SHALL BE PLACED ONLY IN THIS 4' SIDEWALK AREA.
4. NEW DRIVEWAY APPROACHES SHALL NOT ENCROACH WITHIN TEN FEET (10') OF CURB RETURNS. MINIMUM LENGTH OF FULL HEIGHT CURB BETWEEN COMMERCIAL DRIVEWAY APPROACHES SHALL BE TWENTY FEET (20').
5. ABANDONED DRIVEWAY APPROACHES SHALL BE REMOVED AND REPLACED WITH STANDARD CURB & GUTTER.
6. WHERE EXISTING FACILITIES ARE NONCONFORMING, APPROACHES MAY BE MODIFIED AS DIRECTED BY THE CITY ENGINEER.
7. INSTALL 1/2" EXPANSION JOINT WHEN CONCRETE IS TO BE INSTALLED BEHIND DRIVEWAY APPROACH.

SCALE: NONE	CITY OF ST. HELENA	DATE: NOV. 1995
DRAWN: DRH	detached sidewalk	STD. NO.
CHK:	STANDARD DRIVEWAY APPROACH	314
APPVD:		

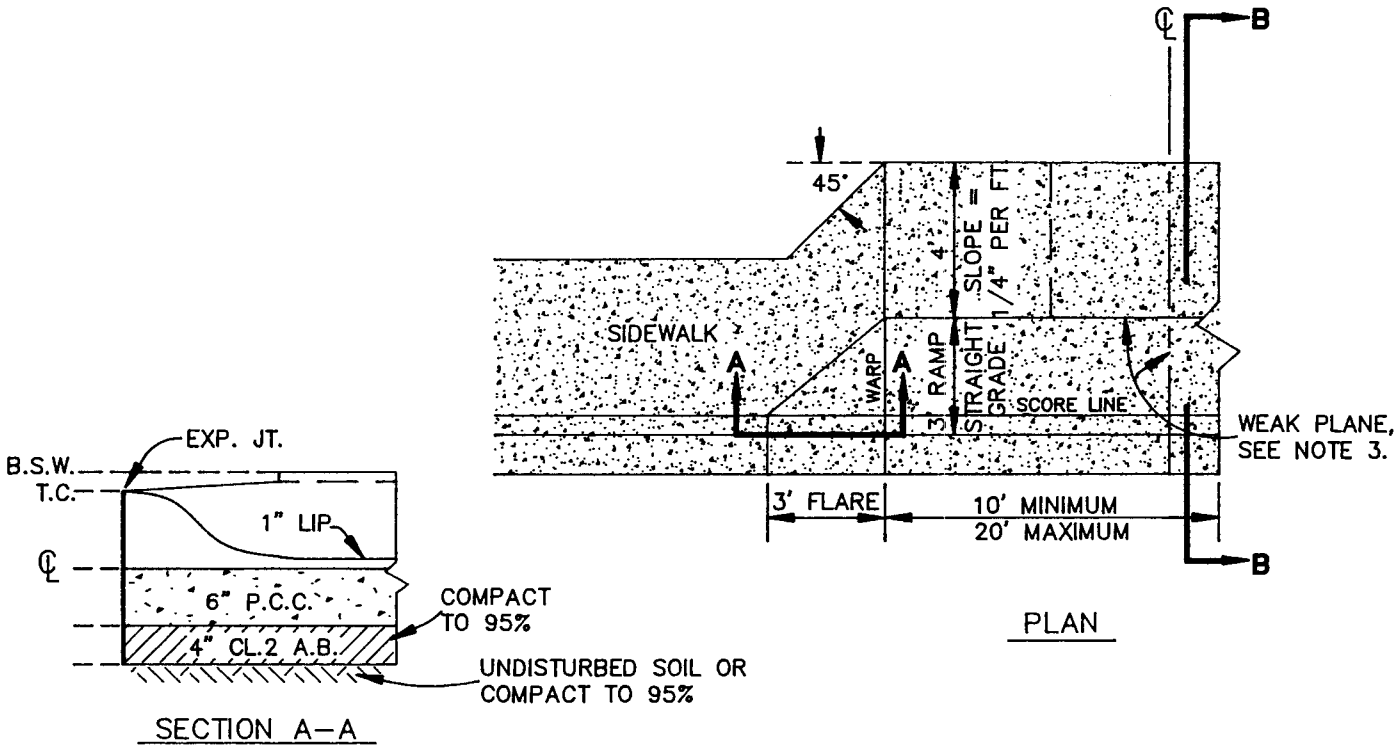

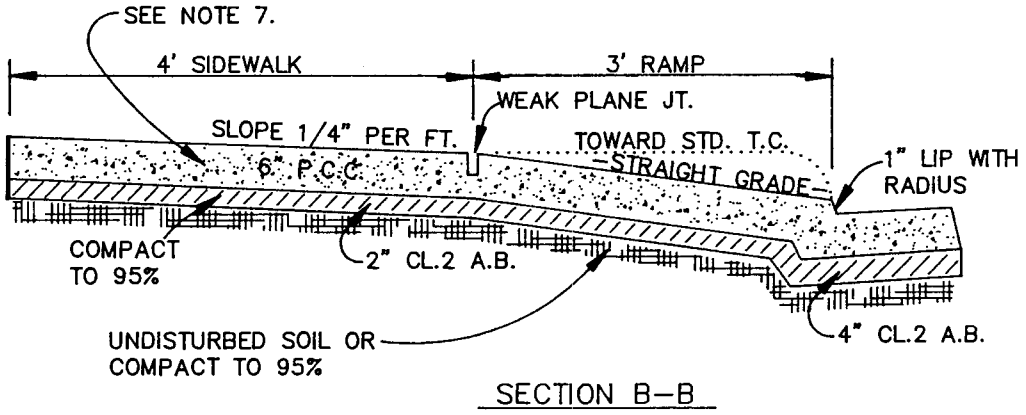

NOTES:

1. EXISTING CURB, GUTTER, AND SIDEWALK SHALL BE CUT AT THE FIRST SCORE LINE BEYOND THE NEW DRIVEWAY LOCATION WITH AN ABRASIVE TYPE SAW TO A MINIMUM DEPTH OF 1–1/2". THE OLD CURB, GUTTER, AND SIDEWALK SHALL BE ENTIRELY REMOVED AND REPLACED WITH CLASS "A" (6 SACK/CU.YD.) CONCRETE AS SHOWN.
2. 1/2" EXPANSION JOINT MATERIAL SHALL BE PLACED ALONG EACH SIDE OF ALL NEW DRIVEWAY APPROACHES. WHERE SIDEWALKS, CURBS AND GUTTERS ARE EXISTING, COLD JOINTS MAY BE SUBSTITUTED.
3. A TRANSVERSE WEAK PLANE JOINT SHALL BE INSTALLED ON THE CENTERLINE OF ALL DRIVEWAYS 20' OR MORE IN WIDTH. THE LONGITUDINAL LINE AS SHOWN SHALL BE A WEAK PLANE JOINT 4' FROM BACK OF SIDEWALK, SCORE LINES SHALL BE PLACED ONLY IN THIS 4' SIDEWALK AREA.
4. NEW DRIVEWAY APPROACHES SHALL NOT ENCROACH WITHIN TEN FEET (10') OF CURB RETURNS. MINIMUM LENGTH OF FULL HEIGHT CURB BETWEEN COMMERCIAL DRIVEWAY APPROACHES SHALL BE TWENTY FEET (20').
5. ABANDONED DRIVEWAY APPROACHES SHALL BE REMOVED AND REPLACED WITH STANDARD CURB & GUTTER.
6. WHERE EXISTING FACILITIES ARE NONCONFORMING, APPROACHES MAY BE MODIFIED AS DIRECTED BY THE CITY ENGINEER.
7. INSTALL 1/2" EXPANSION JOINT WHEN CONCRETE IS TO BE INSTALLED BEHIND DRIVEWAY APPROACH.

SCALE: NONE	**CITY OF ST. HELENA**	DATE: JAN. 1996
DRAWN: DRH	STANDARD DRIVEWAY APPROACH	STD. NO.
CHK: TMS		314A
APPVD: MSO		

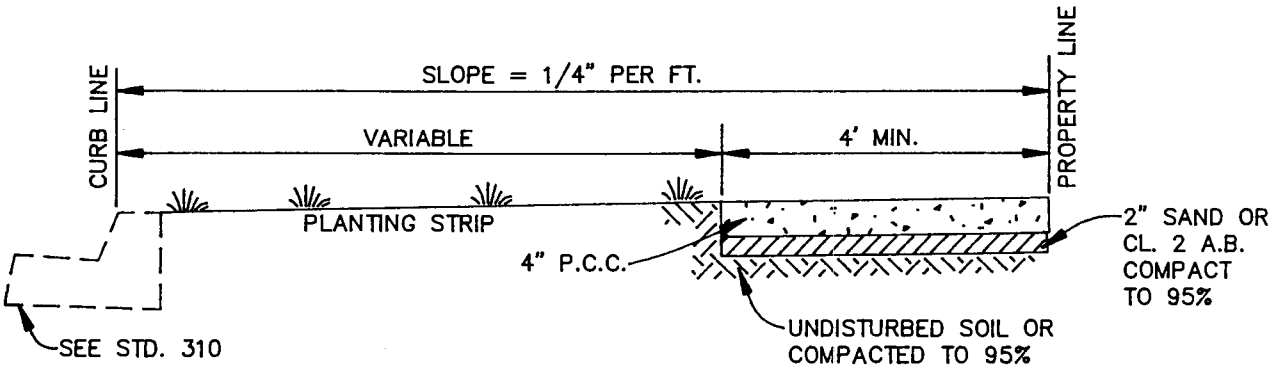

STANDARD RESIDENTIAL TYPE SIDEWALK & PLANTING SECTION
USE ONLY ON APPROVAL FROM CITY ENGINEER

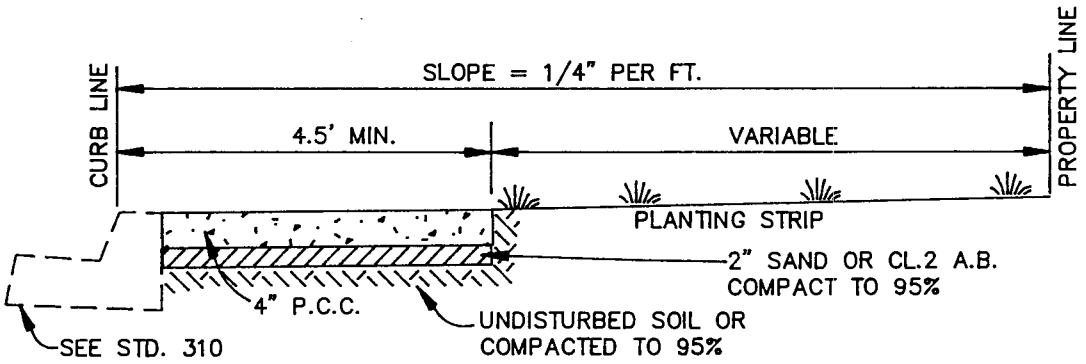

RESIDENTIAL ADJACENT TYPE SIDEWALK & PLANTING SECTION

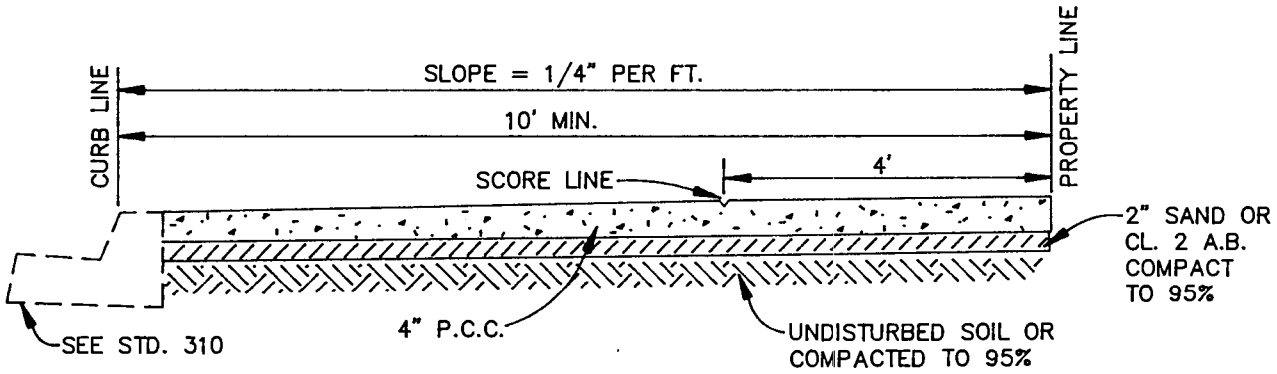

BUSINESS OR COMMERCIAL TYPE SIDEWALK SECTION

NOTES:

1. CLASS 2 A.B. REQUIRED FOR ALL NEW CONSTRUCTION, SAND ONLY FOR HOMEOWNER REPAIRS.
2. ALL SIDEWALKS TO BE OF CLASS "A" (6 SACKS/CU. YARD).
3. ALL SIDEWALKS TO BE 4" THICK; EXCEPT AT DRIVEWAYS, SIDEWALKS SHALL BE 6" THICK.
4. ON STRAIGHT RUN OF STANDARD SIDEWALK, 1/2" EXPANSION JOINTS SHALL BE INSTALLED ON 40' C.C AND WEAK PLANE JOINTS SHALL BE INSTALLED MIDWAY BETWEEN EXPANSION JOINTS. EXPANSION JOINTS AND WEAK PLANE JOINTS SHALL BE OPPOSITE EXPANSION JOINTS AND WEAK PLANE JOINTS IN ADJACENT CURB & GUTTER WHERE APPLICABLE. PLACE TRANSVERSE LINES AT 4' INTERVALS ON 4' RESIDENTIAL AND 10' COMMERCIAL SIDEWALKS, AND AT 4' INTERVALS ON 4' ADJACENT SIDEWALK.
5. EXPANSION JOINTS SHALL BE INSTALLED AT ALL UTILITY BOXES AS DIRECTED BY THE CITY ENGINEER.

SCALE: NONE	CITY OF ST. HELENA	DATE: NOV. 199[illegible] REV: DEC. 1995
DRAWN: DRH CHK: 1/96 APPVD: M/SO	STANDARD DETAILS SIDEWALK SECTIONS	STD. NO. 315

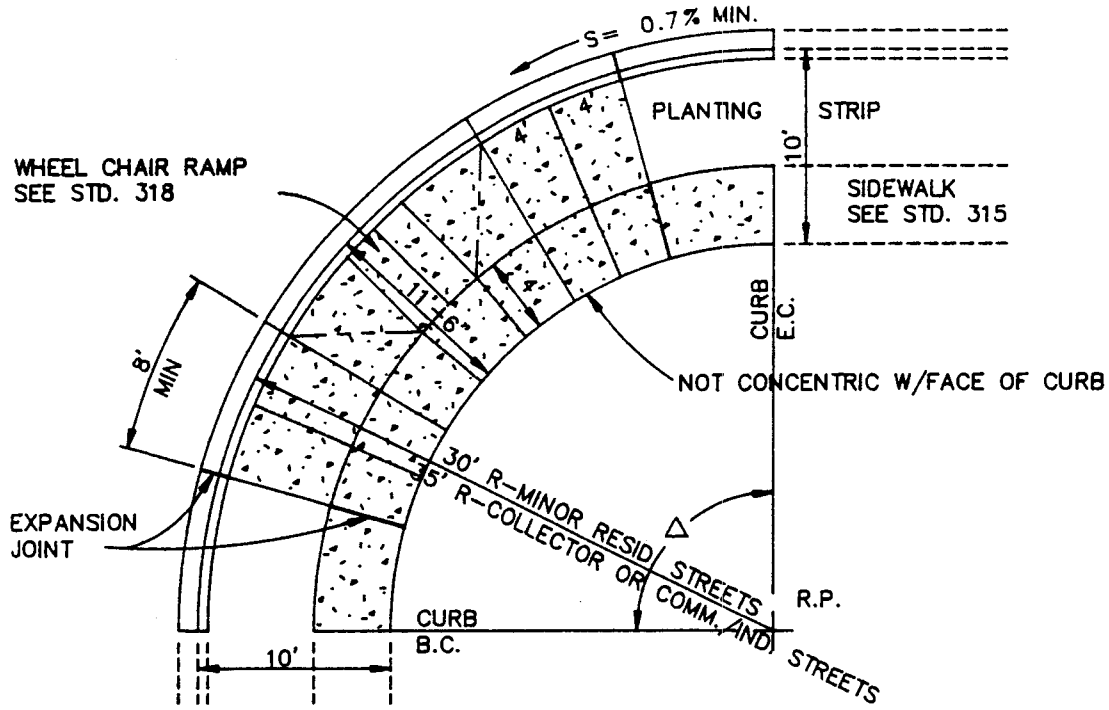

STANDARD S/W/ AREA – 30' CURB RETURN – △ = 80° OR GREATER

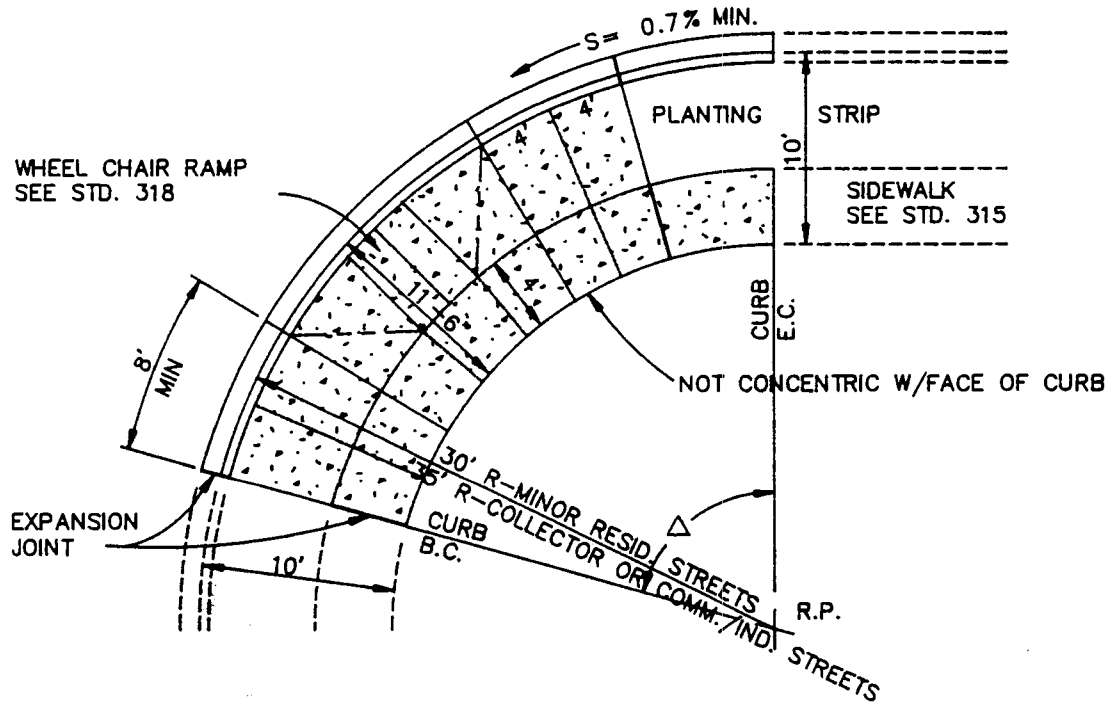

STANDARD S/W AREA – 30' CURB RETURN – △ = LESS THAN 80°

NOTE:
PLACE TRANSVERSE SCORE LINES AT 4' INTERVALS ON FACE OF CURB, RADIAL TO RADIUS POINT.

LEGEND

- 1/2" EXP. JOINT
- SCORE LINE
- WEAK PLANE JOINT
- S/W/ AREA IN RETURN

SCALE: NONE	**CITY OF ST. HELENA**	DATE: NOV. 1993
DRAWN: DRH	STANDARD CURB RETURN CURB, GUTTER & SIDEWALK	STD. NO.
CHK:		316
APPVD:		

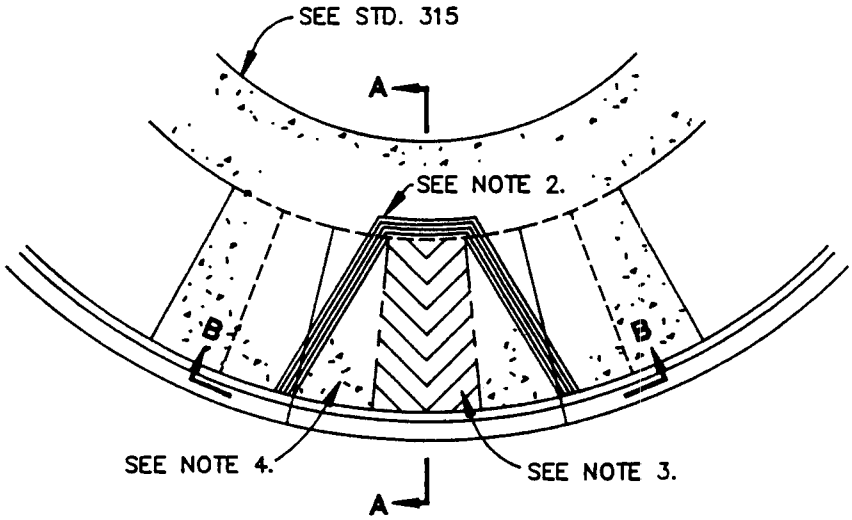

PLAN

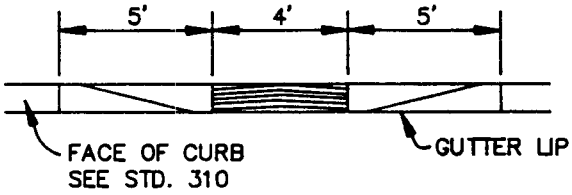

SECTION B–B

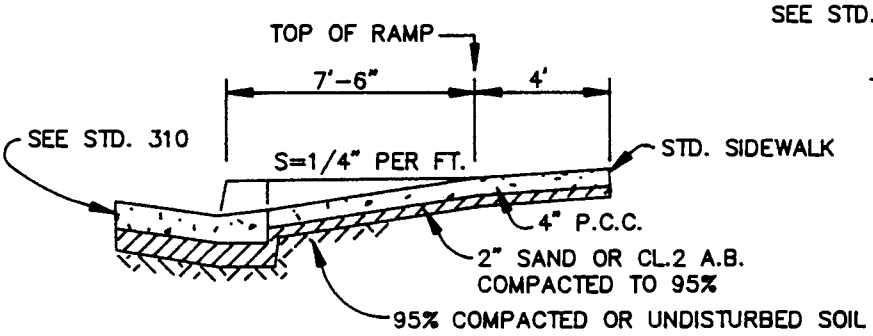

SECTION A–A

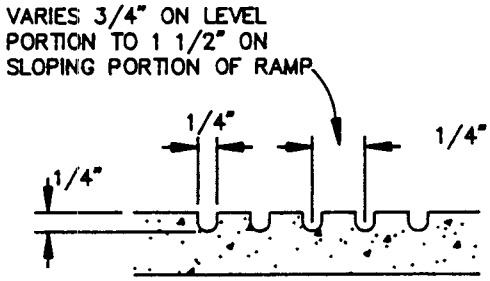

GROOVING DETAIL

NOTES:

1. WHEEL CHAIR RAMPS ARE TO BE LOCATED AT THE CENTER OF THE CURB RETURNS AS PER STD. 316.
2. RAMPS SHALL HAVE A 12" WIDE BORDER WITH 1/4" GROOVES 3/4" O.C.
3. RAMPS SHALL BE GROOVED IN A HERRINGBONE PATTERN WITH 1/4" GROOVES 1–1/2" O.C. GROOVES SHALL BE ALIGNED PARALLEL TO THE LINE OF PEDESTRIAN TRAVEL.
4. RAMP SURFACES THAT ARE NOT GROOVED, SHALL BE FINISHED WITH A ROUGHER SURFACE THAN THE SURROUNDING SIDEWALK.
5. WHERE EXISTING FACILITIES ARE NONCONFORMING OR RIGHT OF WAY LIMITATIONS EXIST, RAMPS MAY BE MODIFIED AS APPROVED BY THE CITY ENGINEER.
6. CLASS 2 A.B. REQUIRED FOR ALL NEW CONSTRUCTION,

LEGEND

- SCORE LINE
- WARP PLANE
- WEAK PLANE JOINT
- S/W AREA IN RETURN

SCALE: NONE	CITY OF ST. HELENA	DATE: NOV. 19[illegible]
DRAWN: DRH	WHEEL CHAIR RAMP 25' P/L RADIUS RETURN	STD. NO.
CHK:		317
APPVD:		

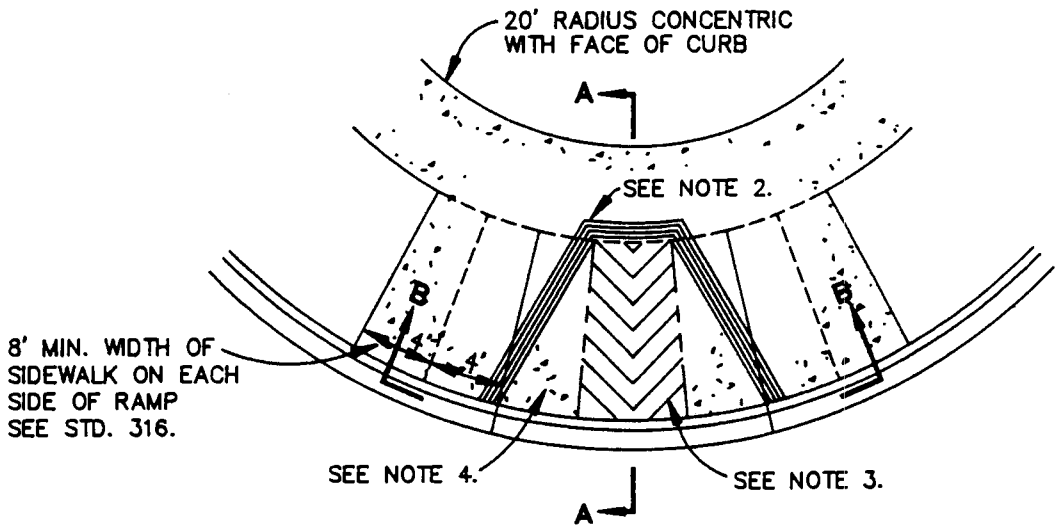

PLAN

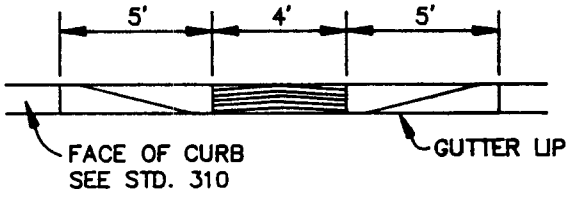

SECTION B–B

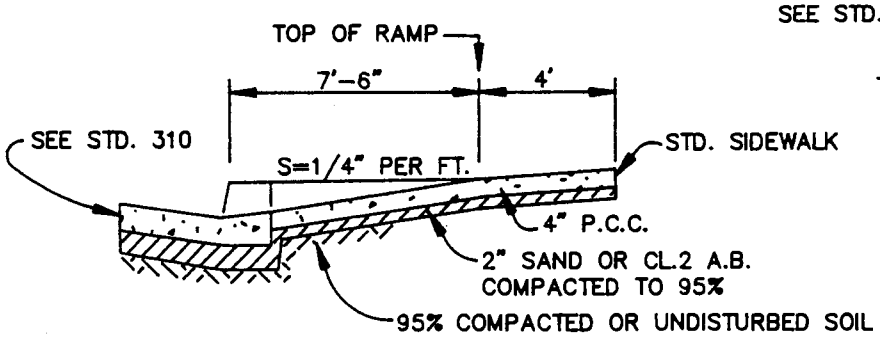

SECTION A–A

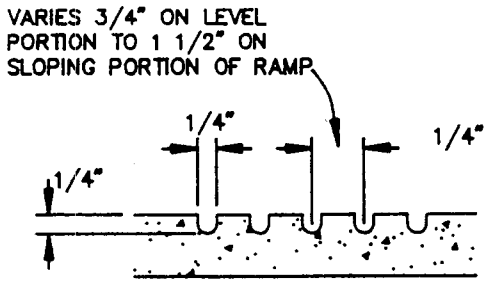

GROOVING DETAIL

NOTES:

1. WHEEL CHAIR RAMPS ARE TO BE LOCATED AT THE CENTER OF THE CURB RETURNS AS PER STD. 316.
2. RAMPS SHALL HAVE A 12" WIDE BORDER WITH 1/4" GROOVES 3/4" O.C.
3. RAMPS SHALL BE GROOVED IN A HERRINGBONE PATTERN WITH 1/4" GROOVES 1–1/2" O.C. GROOVES SHALL BE ALIGNED PARALLEL TO THE LINE OF PEDESTRIAN TRAVEL.
4. RAMP SURFACES THAT ARE NOT GROOVED, SHALL BE FINISHED WITH A ROUGHER SURFACE THAN THE SURROUNDING SIDEWALK.
5. WHERE EXISTING FACILITIES ARE NONCONFORMING OR RIGHT OF WAY LIMITATIONS EXIST, RAMPS MAY BE MODIFIED AS APPROVED BY THE CITY ENGINEER.
6. CLASS 2 A.B. REQUIRED FOR ALL NEW CONSTRUCTION, SAND ONLY FOR HOMEOWNER REPAIRS.

LEGEND

- SCORE LINE
- WARP PLANE
- WEAK PLANE JOINT
- S/W AREA IN RETURN

SCALE: NONE	CITY OF ST. HELENA	DATE: NOV. 1993
DRAWN: DRH	WHEEL CHAIR RAMP 20' P/L RADIUS RETURN	STD. NO.
CHK:		318
APPVD: MSo		

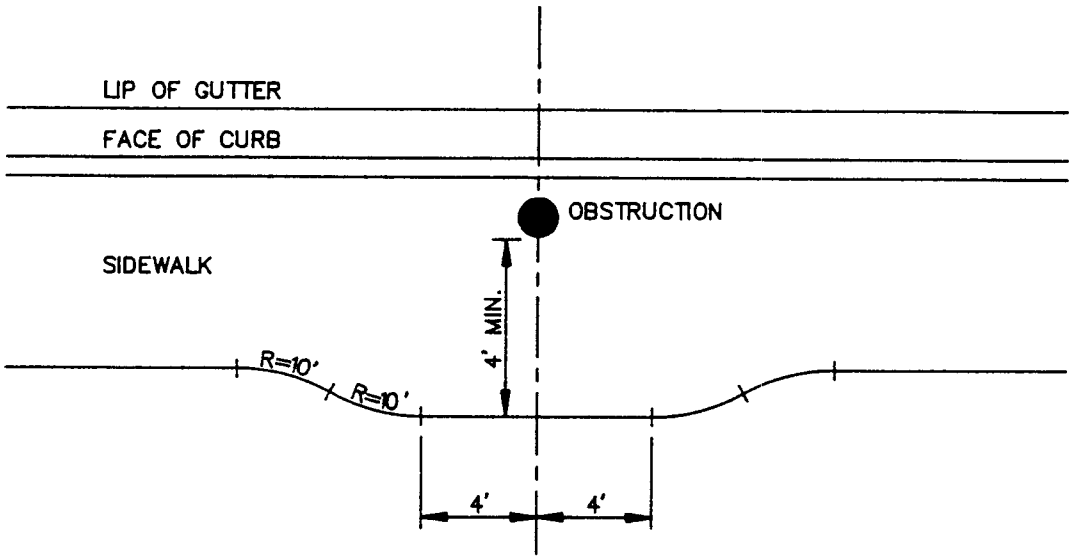

SCALE: NONE	**CITY OF ST. HELENA**	DATE: NOV. 19.
DRAWN: DRH	TYPICAL SIDEWALK OBSTRUCTION TRANSITION	STD. NO. 319
CHK:		
APPVD:		

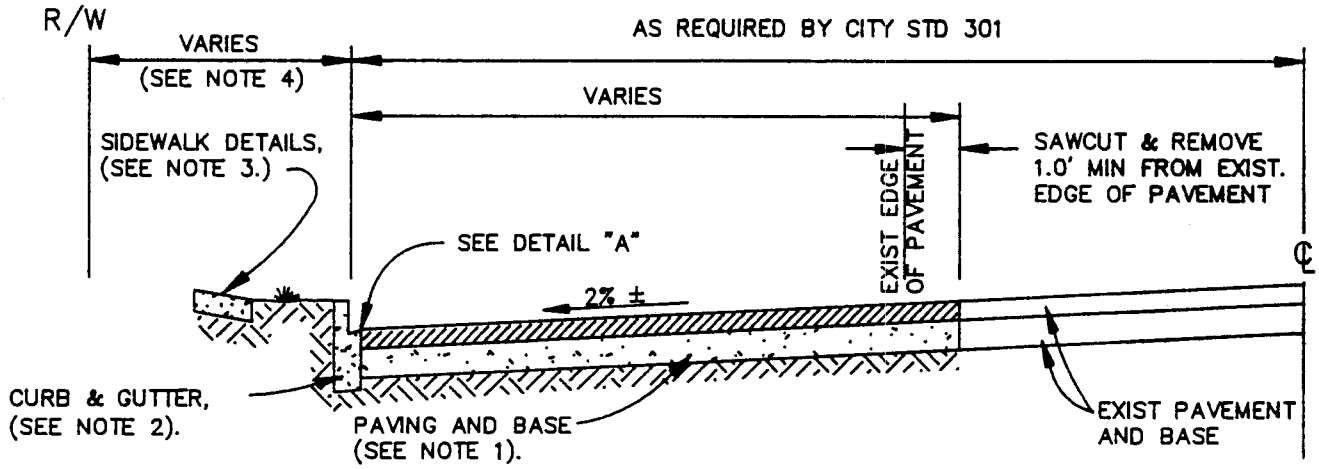

DETAIL "A"

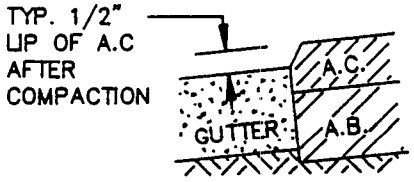

NOTES:

1. PAVING AND BASE THICKNESS TO BE DETERMINED BY USING CHARTS SHOWN IN THE CITY STD'S 302 AND 303. MIN. PAVEMENT THICKNESS TO BE 2".
2. SEE STD. 310 FOR SIDEWALK DETAILS.
3. SEE STD. 315 FOR CURB & GUTTER DETAILS.
4. DISTANCE BETWEEN FACE OF CURB AND RIGHT-OF-WAY TO BE PER STD 315.

SCALE: NONE	CITY OF ST. HELENA	DATE: NOV. 1993
DRAWN: DRH	STREET WIDENING/PAVEOUT DETAIL	STD. NO.
CHK:		320
APPVD:		

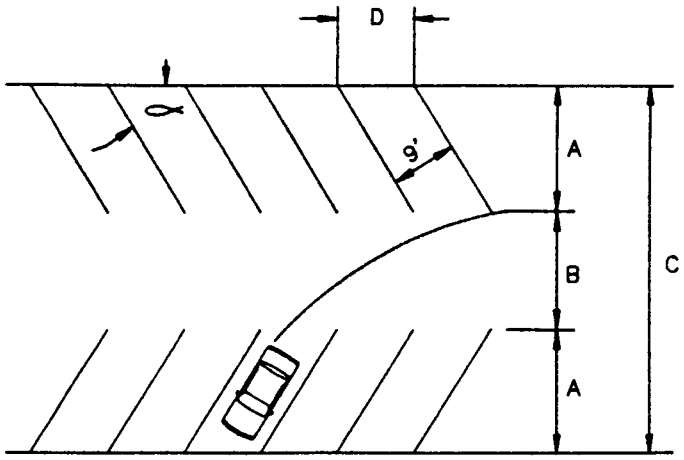

ANGLED

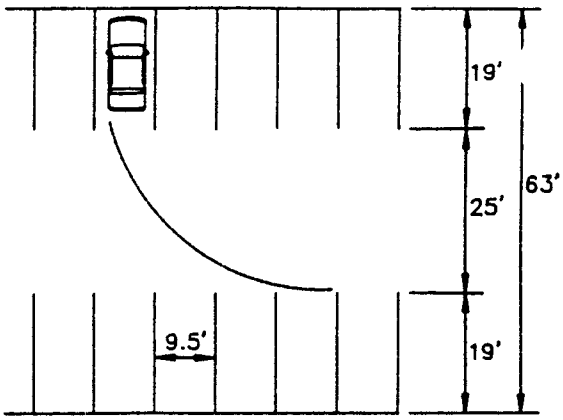

90°

ANGLED PARKING DIMENSIONS	α	75°	60°	45°	30°
STALL DEPTH TO WALL	A	19.5'	20'	18.5'	16'
AISLE WIDTH (ONE WAY)	B	21'	18'	14'	14'
WALL TO WALL MODULE	C	60'	58'	51'	46'
STALL WIDTH, PARALLEL TO AISLE	D	9.32'	10.39'	12.73'	18'

NOTES:

1. COMPACT CAR SPACES:

   A. STALL WIDTH MAY BE REDUCED BY ONE FOOT.
   B. STALL LENGTH MAY BE REDUCED BY THREE FEET.
   C. "COMPACT PARKING ONLY" SHALL BE STENCILED ON THE PAVEMENT AT THE ENTRANCE TO EACH STALL WITH 6" MINIMUM HEIGHT LETTERS.
   D. THE ALLOWABLE PERCENTAGE OF COMPACT CAR SPACES IS CONTAINED IN THE CITY'S ZONING ORDINANCE.
   E. WHEN PROVIDED, COMPACT CAR SPACE CLUSTERS SHALL BE DISPERSED THROUGHOUT THE PARKING LOT, NOT CONCENTRATED IN ONE AREA.

2. PARALLEL SPACES:

   A. PARALLEL SPACES ALONG A WALL, FENCE OR HEDGE SHALL BE TEN FEET WIDE.
   B. PARALLEL SPACES HAVING NO OBSTRUCTION OR ADJACENT PARKING SPACE WITHIN TEN FEET OF ONE END MAY REDUCE THE LENGTH TO 20 FEET. IF BOTH ENDS ARE SIMILARLY CLEAR, THE SPACE MAY BE REDUCED TO 18 FEET.

SCALE: NONE	CITY OF ST. HELENA	DATE: NOV. 19[illegible]
DRAWN: DRH	STANDARD OFF STREET PARKING REQUIREMENTS	STD. NO.
CHK:		321A
APPVD:		

NOTES: (CONT'D)

3. LONG TERM PARKING:

PARKING STALLS THAT ARE DESIGNATED FOR LONG-TERM, OR LOW TURNOVER USE, AS ALLOWED IN THE CITY'S ZONING ORDINANCE MAY BE REDUCED AS FOLLOWS:

A. STALL WIDTH MAY BE REDUCED BY SIX INCHES. SMALL CAR STALLS MAY NOT BE REDUCED IN WIDTH.
B. STALL LENGTH MAY BE REDUCED BY ONE FOOT (INCLUDING SMALL CAR SPACES).
C. AISLE WIDTH MAY BE REDUCED BY ONE FOOT FOR 90 PARKING BAYS.
D. THE ABOVE REDUCTIONS MAY NOT BE ALLOWED FOR PARKING STALLS ALONG THE PRIMARY ENTRANCE AISLE TO THE PROJECT.

4. STALLS ADJACENT TO A LANDSCAPED AREA SHALL BE WIDENED BY SIX INCHES. STALLS ADJACENT TO A FENCE WALL OR HEDGE SHALL BE WIDENED BY ONE FOOT.

5. THE MINIMUM AISLE DIMENSION FOR TWO-WAY TRAFFIC SHALL BE 24 FEET AND FOR ONE-WAY TRAFFIC 14 FEET.

6. THE FRONT TWO FEET OF THE REQUIRED PARKING STALL DIMENSION MAY BE USED TO ENLARGE AN ADJACENT LANDSCAPED AREA BUT MAY NOT BE USED TO MEET MINIMUM LANDSCAPING REQUIREMENTS. LANDSCAPING WITHIN THIS OVERHANG AREA SHALL BE LIMITED TO LOW-LYING SHRUBS AND GROUND COVER AND MUST BE APPROVED BY THE PLANNING DEPARTMENT.

7. HANDICAP STALLS SHALL BE PROVIDED IN ACCORDANCE WITH STD. 322.

8. PARKING LOTS SHALL BE DESIGNED WITH ADEQUATE CIRCULATION AND TURN AROUND SO THAT VEHICLES WILL NOT HAVE TO BACK INTO THE STREET TO EXIT.

9. ALL PARKING LOTS SHALL BE PAVED AND SHALL COMPLY WITH THE DESIGN AND CONSTRUCTION STANDARDS FOR ACCESS DRIVES.

10. PARKING STALLS SHALL BE MARKED USING 4" WIDE WHITE PAINT STRIPES. ALL DIRECTIONAL ARROWS AND LEGENDS SHALL BE WHITE. DOUBLE LINING OF PARKING STALLS MAY BE USED WITH SPECIFIC APPROVAL OF THE PUBLIC WORKS DIRECTOR.

11. ALL ANGLED OR 90 DEGREE PARKING SPACES SHALL BE PROVIDED WITH A CONCRETE WHEEL STOP TO PREVENT PARKED VEHICLES FROM ENCROACHING INTO AREAS DESIGNED FOR OTHER PURPOSES, EXCEPT AS ALLOWED IN ITEM 6 ABOVE. CONTINUOUS CONCRETE CURB IS ACCEPTABLE IN LIEU OF INDIVIDUAL WHEEL STOPS. TIMBER WHEEL STOPS CAN ONLY BE USED WITH SPECIFIC APPROVAL OF THE PUBLIC WORKS DIRECTOR.

12. WHERE THE LOCATION OF EXISTING STRUCTURES OR OTHER SIGNIFICANT FEATURES MAKES IT IMPOSSIBLE TO OBTAIN AN ACCEPTABLE PARKING LAYOUT USING THESE DIMENSIONS, THE PUBLIC WORKS DIRECTOR MAY AUTHORIZE THE USE OF ALTERNATIVE DIMENSIONS.

SCALE: NONE	CITY OF ST. HELENA	DATE: NOV. 1993
DRAWN: DRH	STANDARD OFF STREET PARKING REQUIREMENTS	STD. NO.
CHK:		321B
APPVD:		

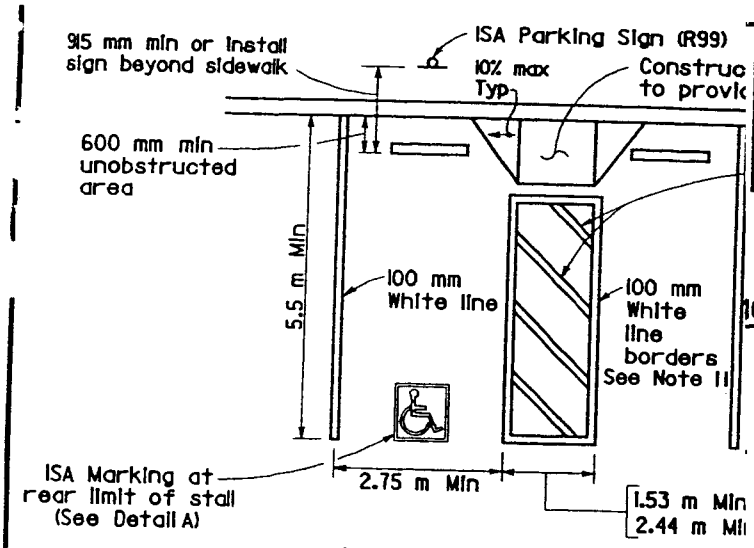

SINGLE PARKING STALL

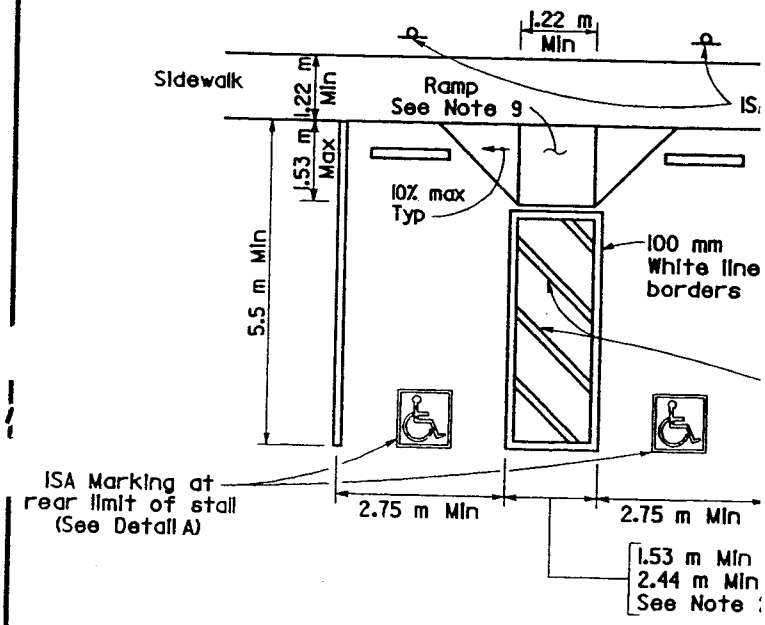

DOUBLE PARKING STALLS

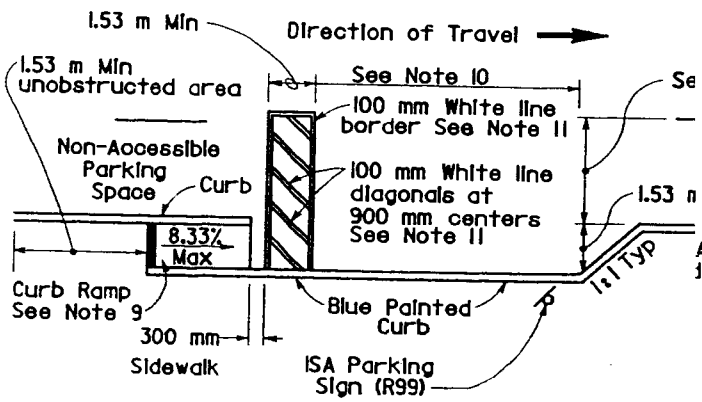

SINGLE PARKING SPACE

Metric

DIST	COUNTY	ROUTE	KILOMETER POST TOTAL PROJECT	SHEET NO.	TOTAL SHEETS

REGISTERED CIVIL ENGINEER

May 29, 1996
PLANS APPROVAL DATE

The State of California or its officers or agents shall not be responsible for the accuracy or completeness of electronic copies of this plan sheet.

REGISTERED PROFESSIONAL ENGINEER Allen Wrenn No. C14388 Exp. 3-31-97 CIVIL STATE OF CALIFORNIA

NOTES

Accessible parking stalls shall be located as close as possible, and on the shortest accessible route of travel, to the pedestrian entrance or exit of the parking lot or garage.

One in every eight accessible off-street parking stalls, but not less than one, shall be served by an accessible aisle of 2.44 m minimum width and shall be signed van accessible. The R99A "Van Accessible" sign shall be mounted below the R99 "ISA Parking" sign.

In each parking stall, a curb or bumper shall be provided and located to prevent encroachment of vehicles over the required width of walkways. Parking stalls shall be so located that persons with disabilities are not compelled to wheel or walk behind parked cars other than their own.

When less than five parking stalls are provided, one stall with a minimum width of 5.19 m shall be made accessible to persons with disabilites. However, there is no requirement that the stall be reserved exclusively or identified for that purpose.

Surface slopes of accessible off-street parking stalls shall be the minimum possible and shall not exceed 2 percent in any direction. Surface slopes of accessible on-street parking stalls shall be the minimum feasible.

Table A shall be used to determine the required number of accessible parking stalls in any parking lot or garage.

Where new on-street or time limited parking is provided and designated in districts zoned for business use, accessible parking shall be provided in accordance with Table A.

Where R99 "ISA Parking" or R99A "Van Accessible" signs are installed on sidewalks or other paths of travel, the bottom of the sign panel shall be a minimum of 2.04 m above the surface of the sidewalk or path. Where R99 or R99A signs are not installed on sidewalks or other paths of travel, the bottom of the sign panel shall be at least 915 mm above the parking area surface.

Curb and sidewalk ramps shall conform to the details shown on New Standard Plan NSP A88 dated May 29, 1996 or later.

Accessible on-street parking spaces shall not be smaller in length or width than that specified by the local jurisdiction for other spaces.

Blue paint, instead of white may be used for marking accessibility aisles in areas where snow may cause white markings to not be visible.

Design details approved by the Division of the State Architect on March 18, 1996.

A PARKING SIGN (R99)
dard 300 mm x 450 mm
See Note 8

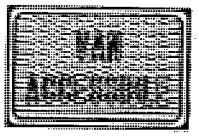

VAN ACCESSIBLE SIGN
(R99A) Standard 300 mm x 200 mm
See Notes 2 and 8

STATE OF CALIFORNIA
DEPARTMENT OF TRANSPORTATION

ACCESSIBLE PARKING

NO SCALE

NSP A90 DATED MAY 29, 1996 SUPPLEMENTS THE STANDARD PLANS BOOK DATED JULY 1995.

N STANDARD PLAN NSP A90

S.I.D. PLAN

NSP A90

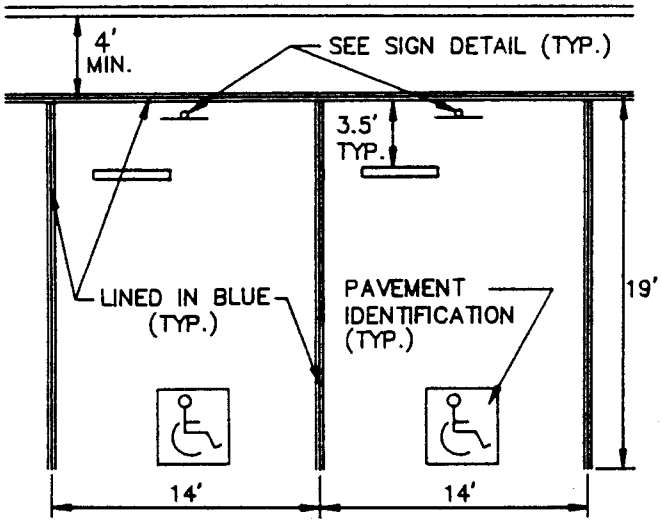

DOUBLE TYPE WITHOUT WALKWAY
(SINGLE SPACE REQUIRES SAME STALL DIMENSIONS)

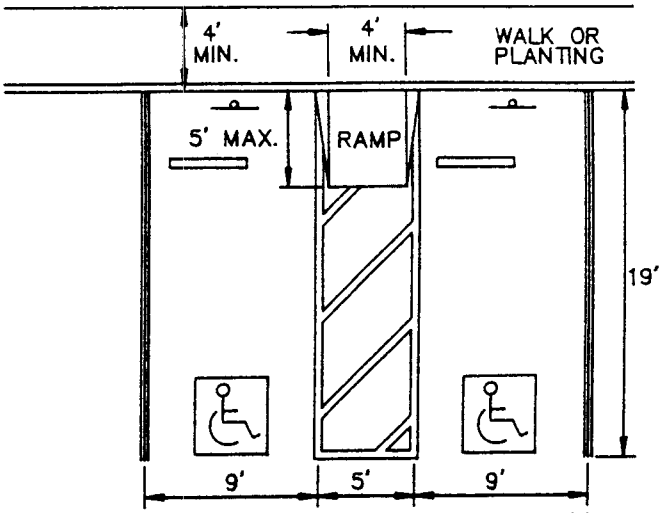

DOUBLE TYPE WITH WALKWAY
(SINGLE SPACE REQUIRES SAME STALL DIMENSIONS AND 5' WALKWAY)

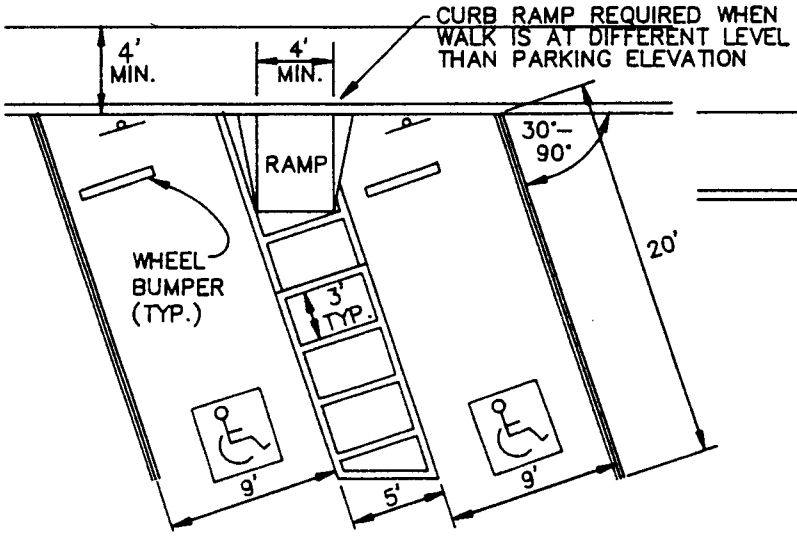

DOUBLE DIAGNOL TYPE WITH WALKWAY
(SINGLE SPACE REQUIRES SAME STALL DIMENSIONS AND 5' WALKWAY)

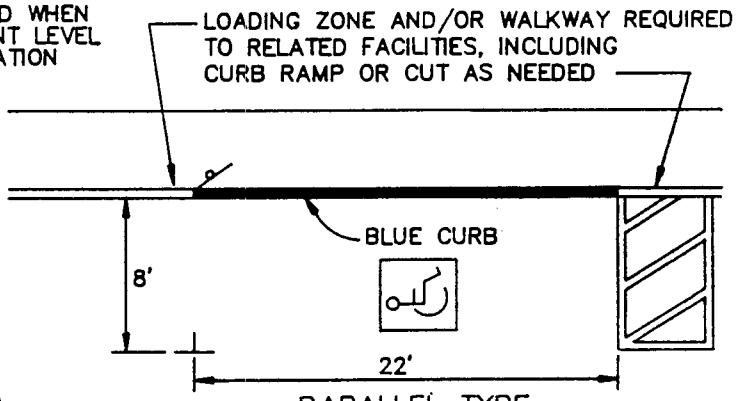

PARALLEL TYPE
(NOTE SIGN PLACEMENT)

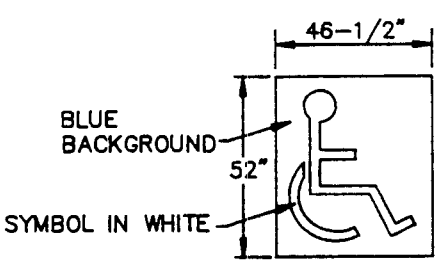

PAVEMENT IDENTIFICATION

SIGN DETAIL

WHEN LESS THAN 5 PARKING SPACES ARE PROVIDED, ONE SHALL BE 14' WIDE AND LINED TO PROVIDE A 9' PARKING AREA AND A 5' LOADING AND UNLOADING AREA. HOWEVER, THERE IS NO REQUIREMENT THAT THE SPACE BE MARKED FOR HANDICAP USE ONLY, ALL OTHERS:

TOTAL NUMBER OF SPACES	NUMBER OF HANDICAP SPACES REQUIRED
1–40	1
41–80	2
81–120	3
121–160	4
161–300	5
301–400	6
401–500	7
OVER 500	1 FOR EACH 200 ADDITIONAL SPACES

1. STANDARD R99 SIGN IN THE CALTRANS UNIFORM SIGN CHART.

2. SIGN SHALL BE CENTERED AT THE INTERIOR END OF THE PARKING SPACE AT A HEIGHT OF 7' FROM THE BOTTOM OF THE SIGN TO THE PARKING SPACE FINISH GRADE, OR CENTERED ON THE WALL AT THE INTERIOR END OF THE PARKING SPACE AT A MIN. HEIGHT OF 36" FROM THE PARKING SPACE FINISHED GRADE, GROUND, OR SIDEWALK.

SCALE: NONE	CITY OF ST. HELENA	DATE: NOV. 1993
DRAWN: DRH	HANDICAPPED PARKING REQUIREMENTS	STD. NO.
CHK:		322
APPVD:		

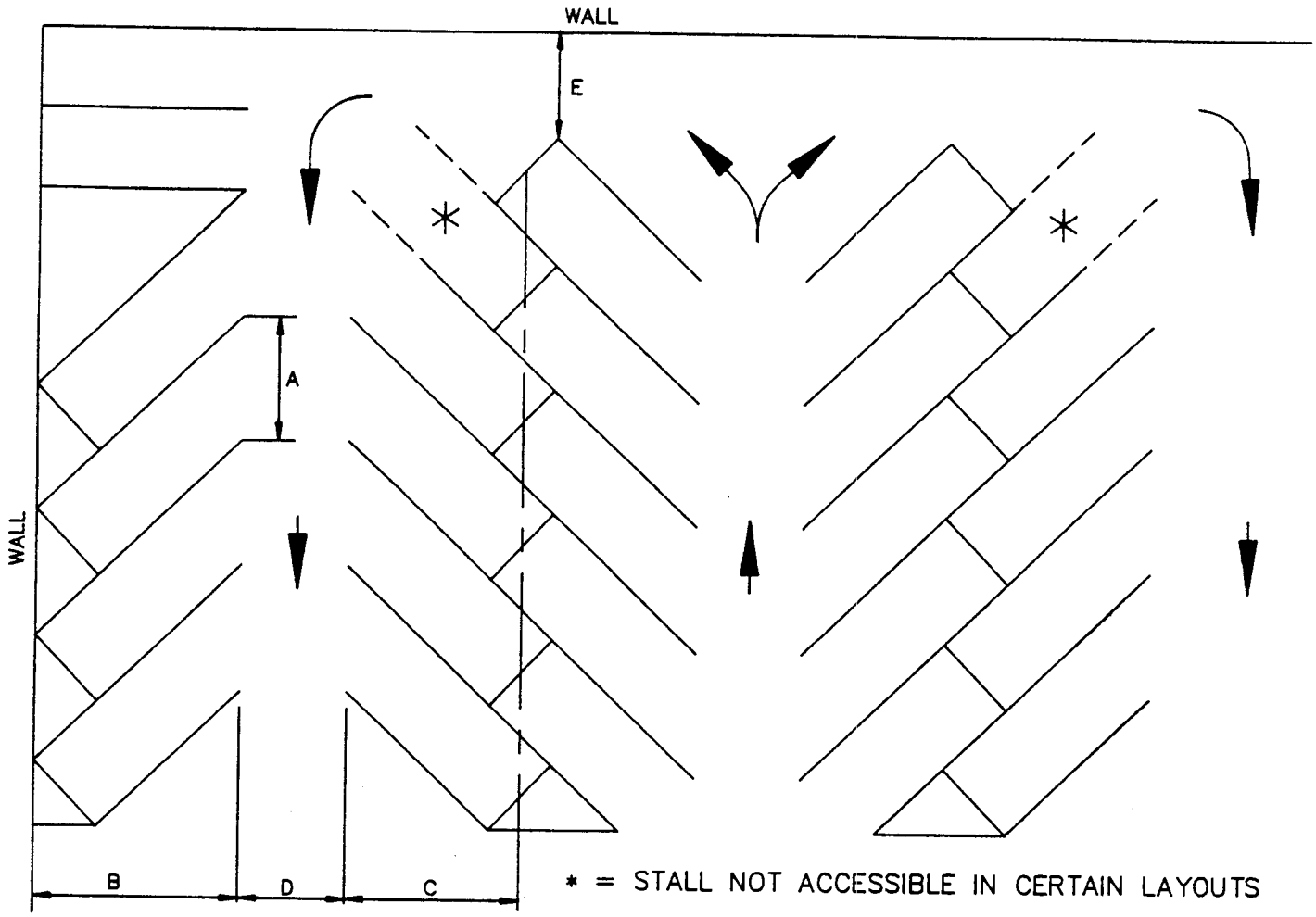

PARKING LOT DIMENSIONS

		STANDARD SIZE (9 Foot Stalls)				COMPACT SIZE (8 Foot Stalls)			
		45°	60°	75°	90°	45°	60°	75°	90°
STALL WIDTH PARALLEL TO AISLE	A	12.7	10.4	9.3	9.0	11.3	9.2	8.3	8.0
STALL DEPTH TO WALL	B	16.6	18.2	18.5	17.5	14.5	15.8	16.0	15.0
STALL DEPTH TO INTERLOCK	C	14.5	16.7	17.7	17.5	12.5	14.4	15.2	15.0
AISLE WIDTH	D	11.0	15.0	19.0	21.0	11.0	14.0	17.0	20.0
END AISLE (ONE-WAY)	E	14.0	14.0	14.0	14.0	14.0	14.0	14.0	14.0
END AISLE (TWO-WAY)	E	20.0	20.0	20.0	20.0	20.0	20.0	20.0	20.0

NOTES:

1. THE MOST CONVENIENT STALLS (60% OF STRUCTURE) SHALL BE 1/2 FOOT WIDER.
2. COMPACT SIZE STALLS SHALL NOT EXCEED 30% OF THE TOTAL.
3. PROVIDE HANDICAPPED PARKING STALLS AS REQUIRED BY STATE LAW.

SCALE: NONE	CITY OF ST. HELENA	DATE: NOV. 1995
DRAWN: DRH	STRUCTURE PARKING STANDARDS	STD. NO.
CHK:		323
APPVD:		

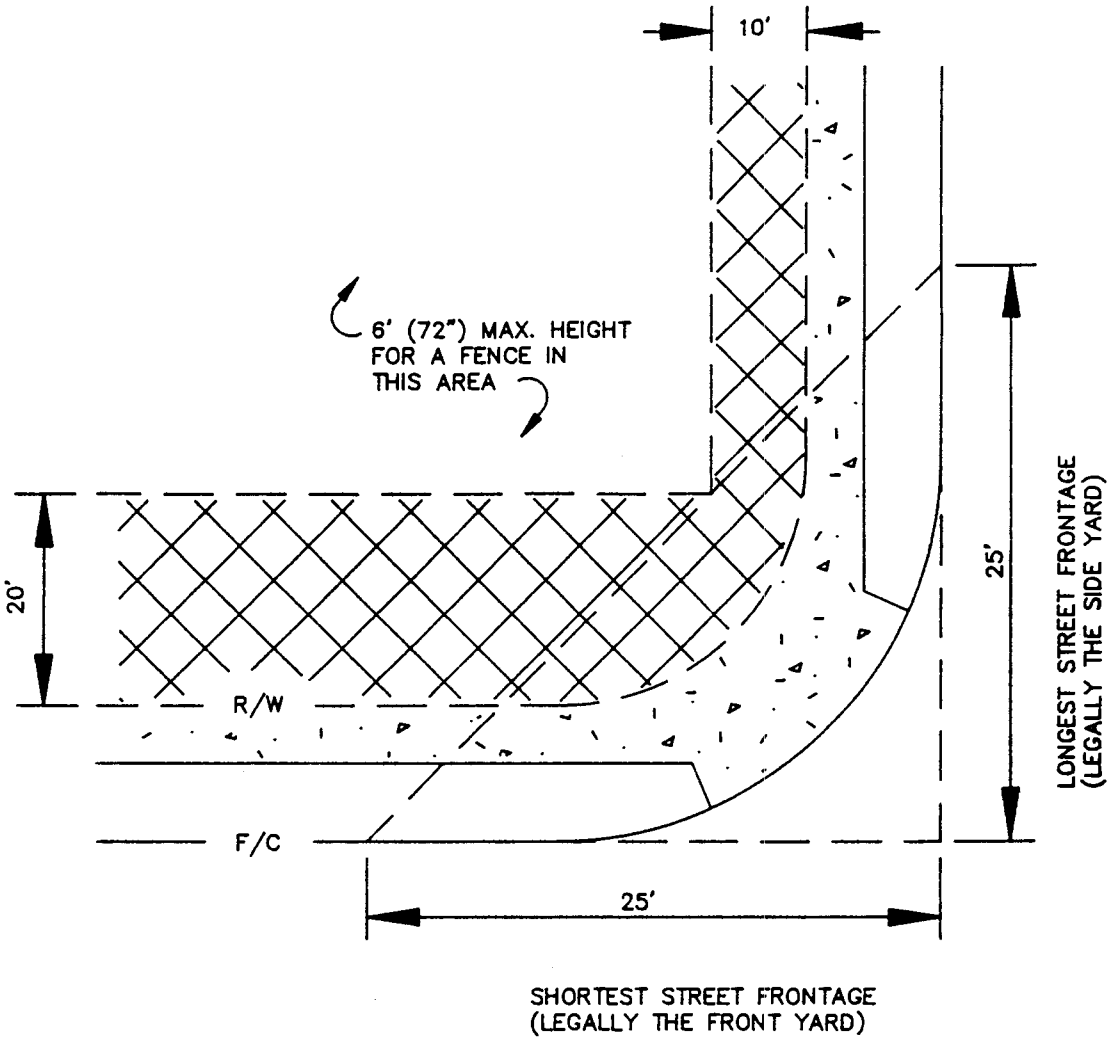

INTERSECTION

WITHIN THIS AREA ALL SHRUBS, BUSHES, FENCES AND OTHER IMPROVEMENTS SHALL BE RESTRICTED TO A 2'-0" (24") MAXIMUM HEIGHT, AND TREES MAINTAINED TO A CLEARANCE OF 7'-0" ABOVE GROUND (MIN.).

SCALE: NONE	**CITY OF ST. HELENA**	DATE: NOV. 1993
DRAWN: DRH	VISIBILITY AND FENCING REQUIREMENTS	STD. NO.
CHK:		324
APPVD:		

NOT USED

SCALE: NONE	CITY OF ST. HELENA	DATE: OCTOBER 2015
DRAWN: DRH	STANDARD BACKFILL DETAIL	STD. NO. 325
CHK:		
APPVD:		

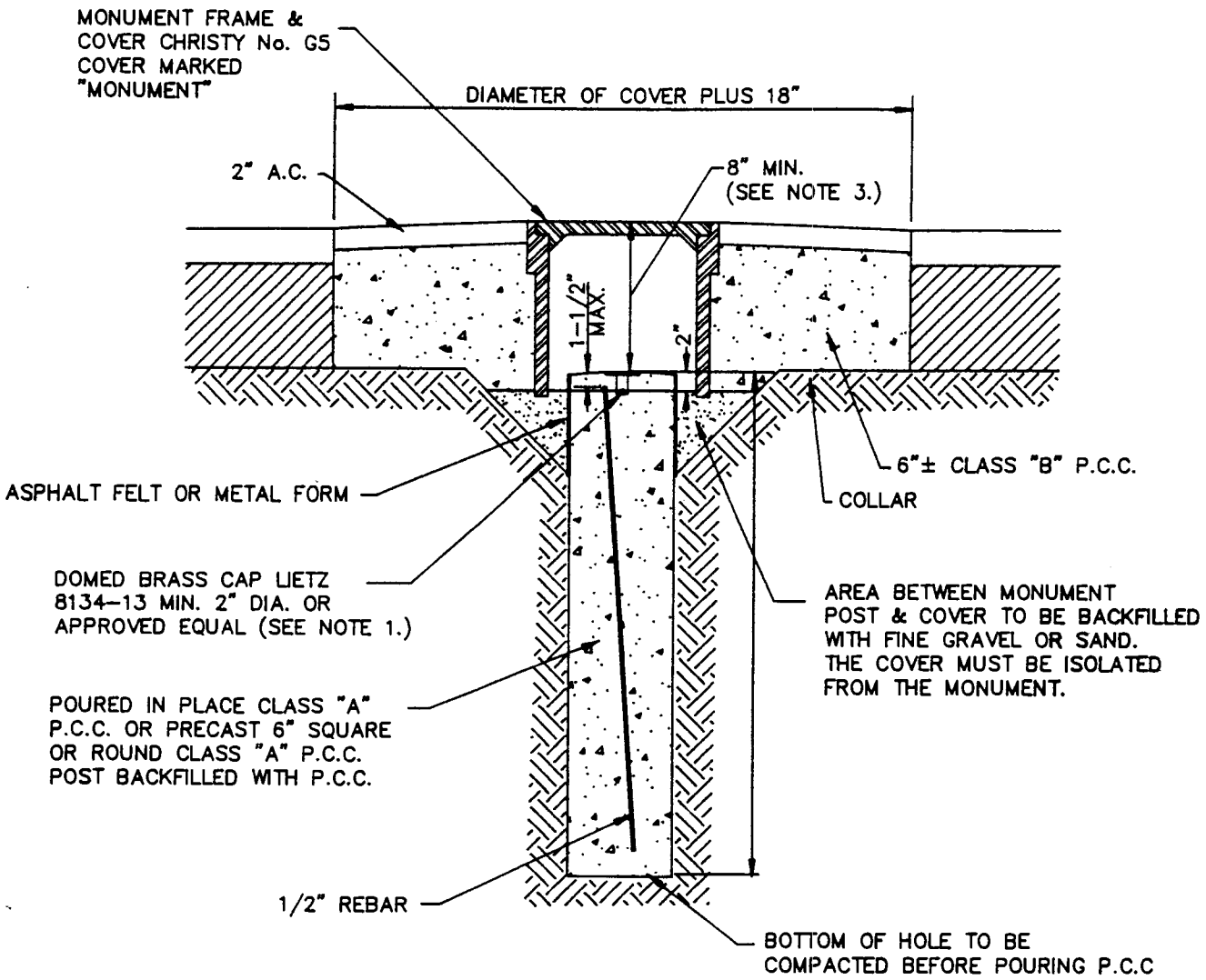

NOTES:

1. SURVEYOR OR ENGINEER SETTING THE MONUMENT SHALL INDICATE EXACT POINT BY MAKING A CROSS ON THE CAP. HE SHALL STAMP YEAR SET AND HIS LICENSE TYPE AND NUMBER.

2. THE DEPTH OF THE MONUMENT POST SHALL BE LENGTHENED OR SHORTENED AS DICTATED BY THE GROUND CONDITIONS OR AS DIRECTED BY THE CITY ENGINEER. IN SOFT GROUND OR FILL AREAS THE MONUMENT POST SHALL BE LENGTHENED TO BED IT ON A STABLE BASE. IN ROCK IT SHALL OR DOWLED PERMANENTLY TO THE ROCK AS DIRECTED BY THE CITY ENGINEER.

3. WHEN THE MONUMENT IS TO BE INSTALLED IN AN EXISTING STREET WHERE THE CROWN IS NOT AT STANDARD ELEVATION, THE TOP OF THE MONUMENT SHOULD BE SET 8" BELOW THE FUTURE STREET SURFACE OR AS DIRECTED BY THE CITY ENGINEER. IT MAY BE NECESSARY TO USE A RISER PIPE.

4. SET MONUMENTS AND COVERS PRIOR TO PAVING.

SCALE: NONE	CITY OF ST. HELENA	DATE: NOV. 1993
DRAWN: DRH	STANDARD PERMANENT MONUMENT	STD. NO. 326
CHK:		
APPVD:		

VALVE RING & COVER, MANHOLE RING & COVER,
SURVEY MONUMENT RING & COVER

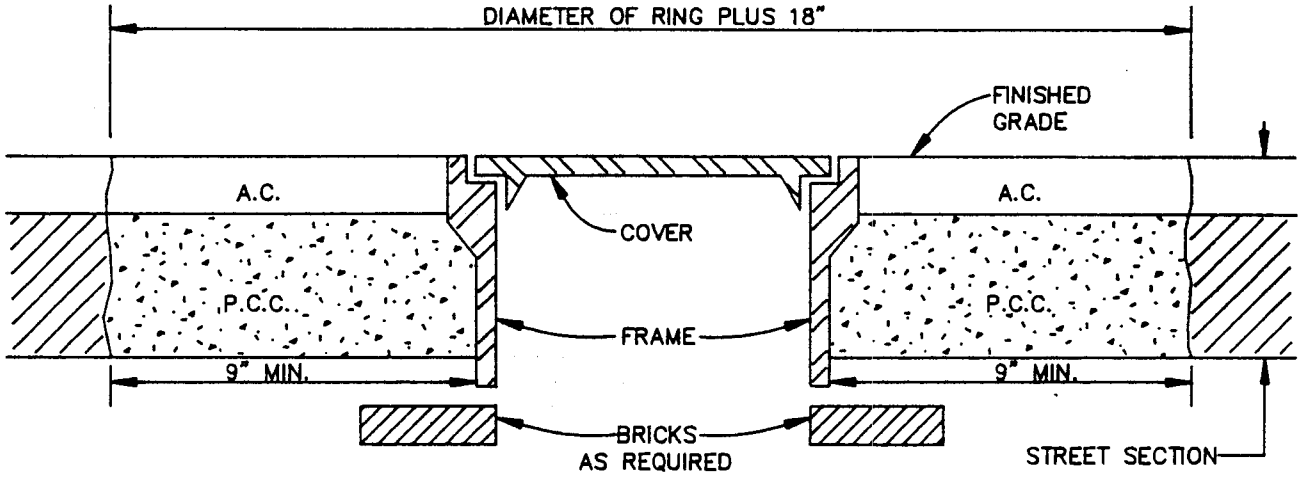

NOTES:

1. APPURTENANCES SHALL BE SET TO GRADE PRIOR TO PLACING FINISHED PAVING.
2. THE ENGINEER SHALL SET THE ELEVATION OF THE FINISHED GRADE AT THE REQUEST OF THE CONTRACTOR.
3. ALL CONCRETE SHALL BE CLASS "B" P.C.C.
4. THE COVER SHALL BE MARKED WITH THE NAME OF THE APPURTENANCE IT IS SET OVER.

SCALE: NONE	CITY OF ST. HELENA	DATE: NOV. 19[illegible]
DRAWN: DRH	TYPICAL METHOD FOR SETTING APPURTENANCES	STD. NO.
CHK:		327
APPVD:		

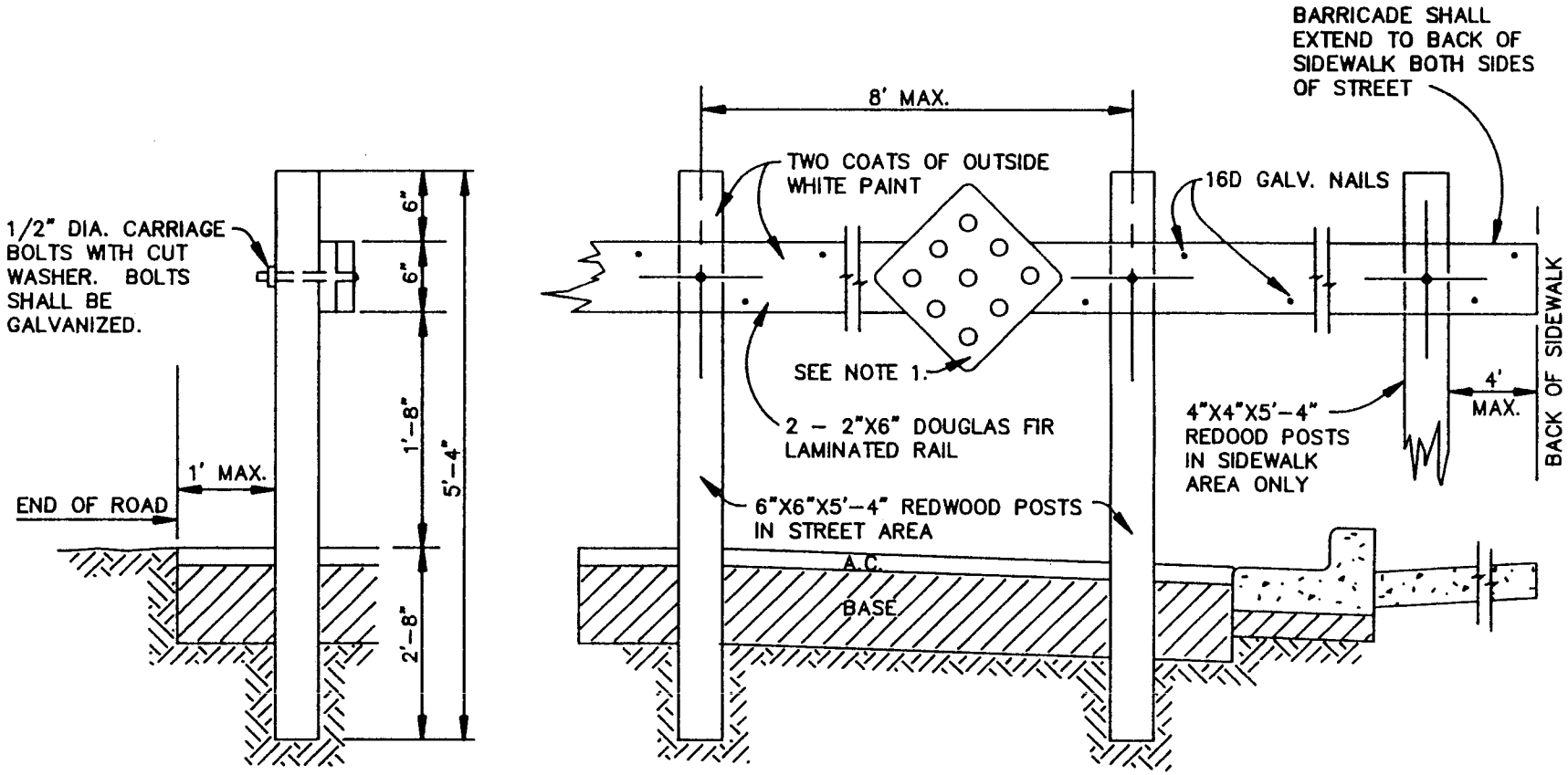

NOTES:

1. INSTALL 18" X 18" ALUMINUM TYPE N-5 REFLECTOR, HAWKINS & HAWKINS CATALOGUE NO. HW-321 OR EQUAL.
2. SIDEWALKS ONLY - INSTALL 4" REFLECTORS.

SCALE: NONE

DRAWN: DRH

CHK:

APPVD:

CITY OF ST. HELENA

STANDARD BARRICADE

DATE: NOV. 1993

STD. NO. 328

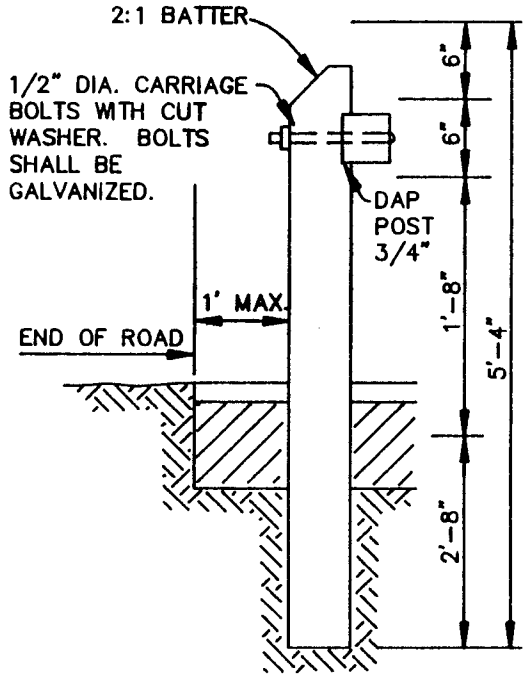

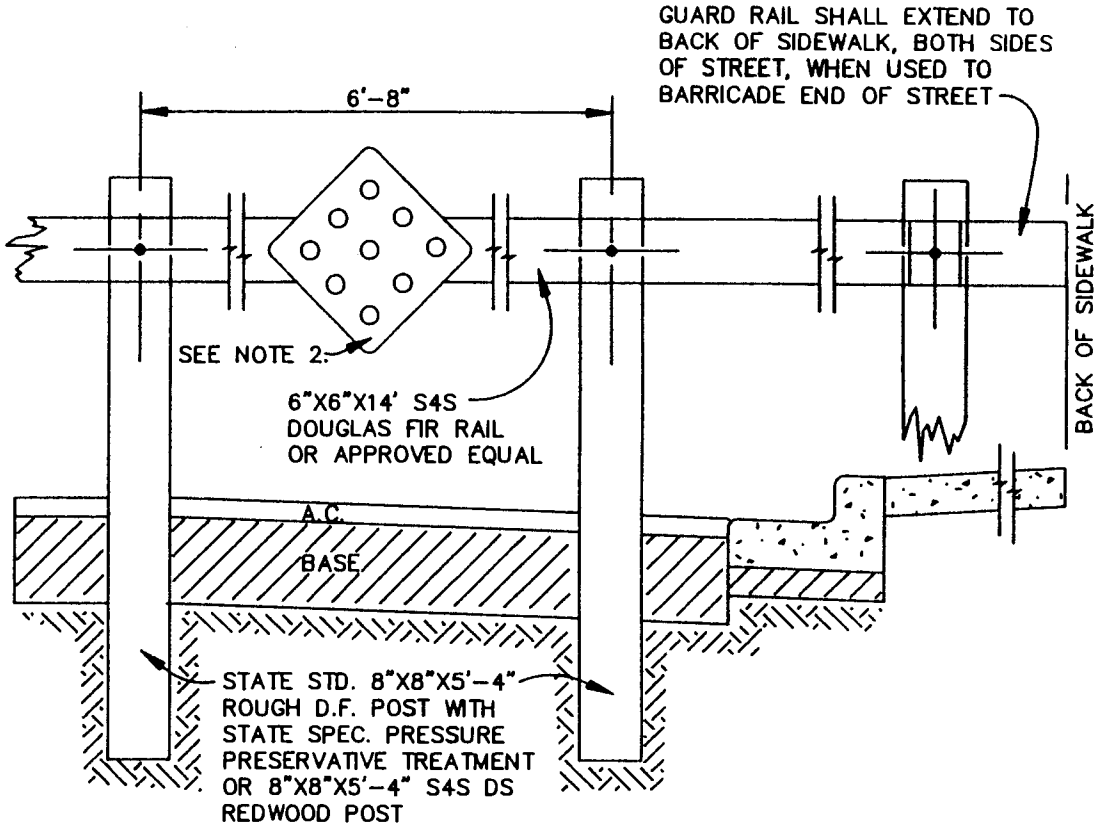

SOLID RAIL

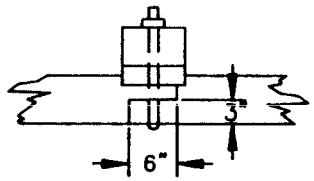

RAIL JOINT

NOTES:

1. GUARD RAIL TO BE PAINTED WITH ONE PRIME COAT AND TWO WHITE EXTERIOR COATS; EXCEPT CREOSOTED SURFACES.

2. INSTALL 18" X 18" ALUMINUM TYPE N-4 REFLECTOR; HAWKINS & HAWKINS CATALOGUE NO. HW-319 OR EQUAL.

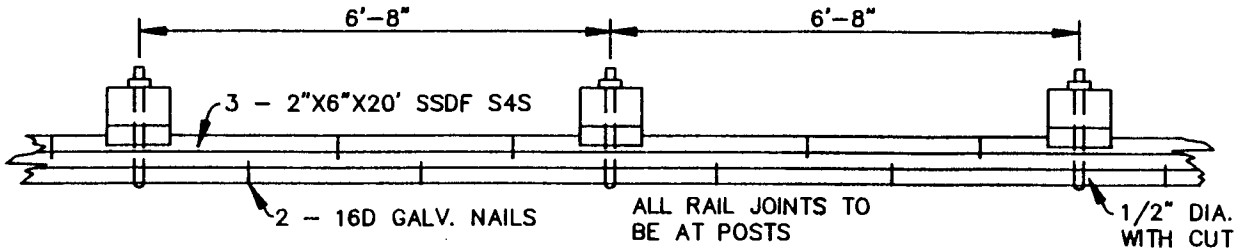

LAMINATED R/

SCALE: NONE

DRAWN: DRH

CHK:

APPVD:

CITY OF ST. HELENA

STANDARD WOOD TYPE GUARD RAIL

DATE: NOV. 19

STD. NO. 329

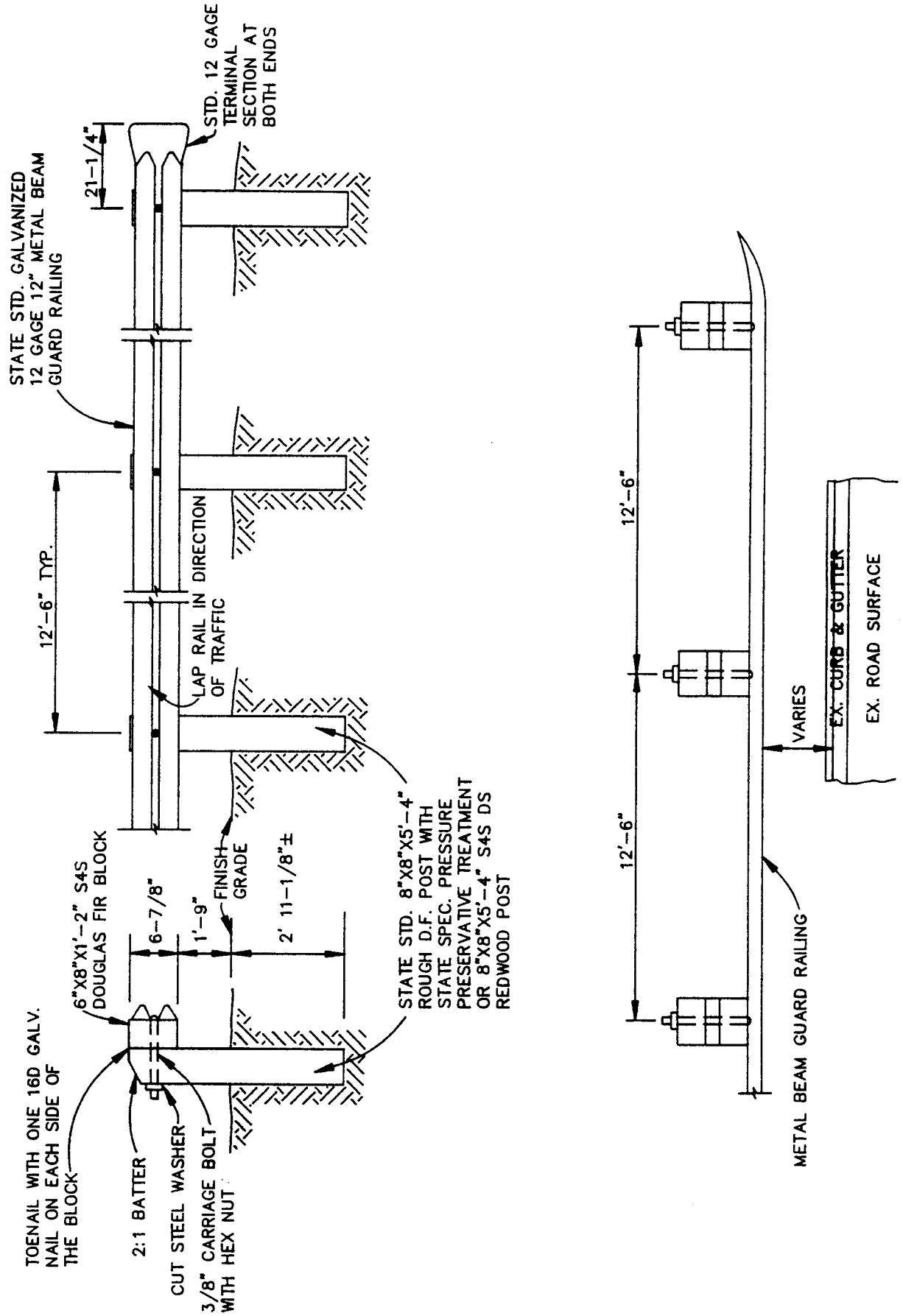

SCALE: NONE	CITY OF ST. HELENA	DATE: NOV. 1993
DRAWN: DRH	STANDARD METAL BEAM, GUARD RAIL	STD. NO. 330
CHK:		
APPVD:		

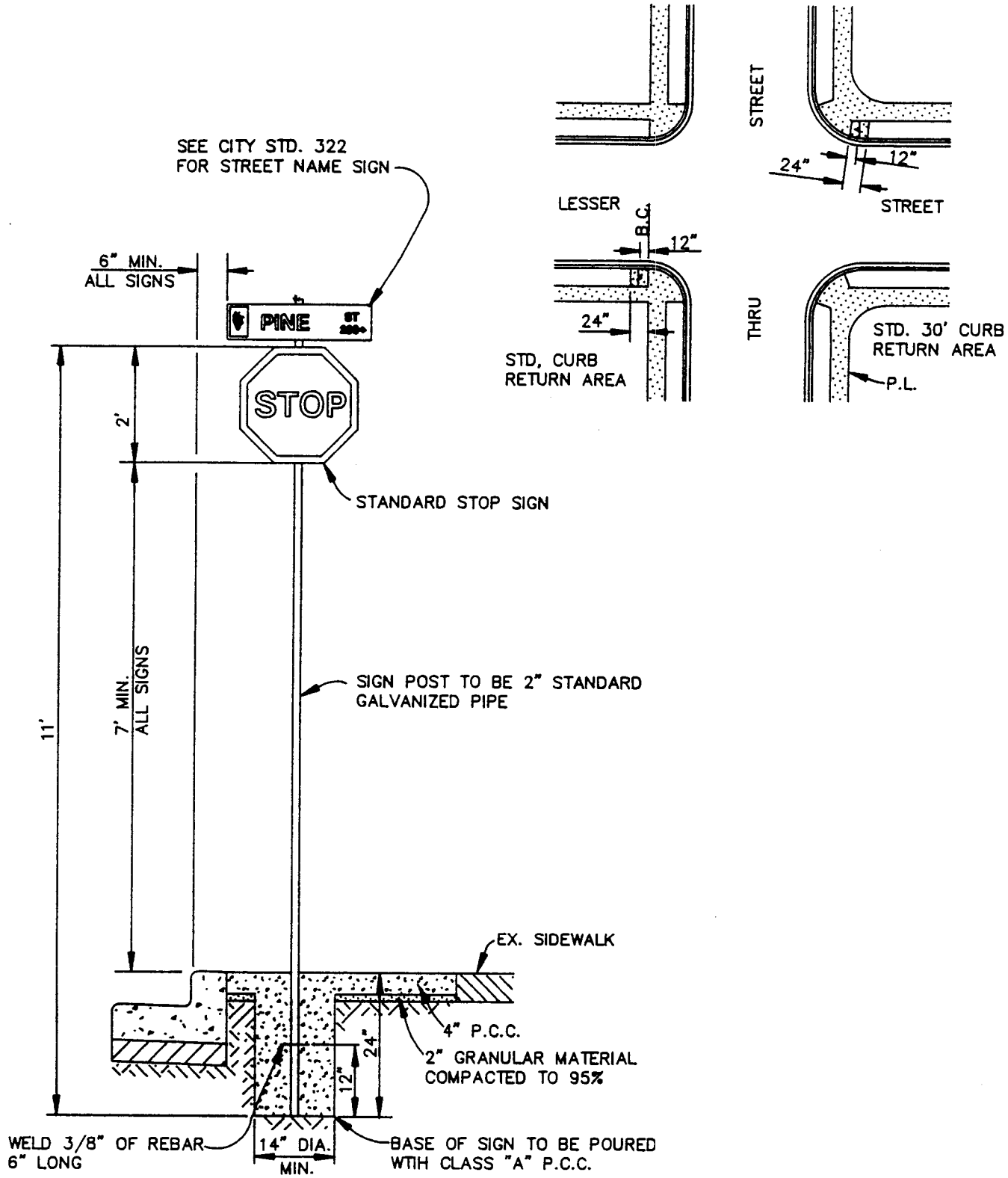

SCALE: NONE	CITY OF ST. HELENA	DATE: NOV. 1995
DRAWN: DRH	STREET NAME SIGN INSTALLATION PUBLIC STREETS	STD. NO.
CHK:		331A
APPVD:		

NOTE:
PRIVATE STREET NAME SIGNS AND POLES SHALL BE INSTALLED ON PRIVATE PROPERTY ONLY, OUT OF CITY RIGHT OF WAY. SIGNS FOR THE PUBLIC STREET SHALL NOT BE MOUNTED ON POLE WITH PRIVATE STREET NAME.

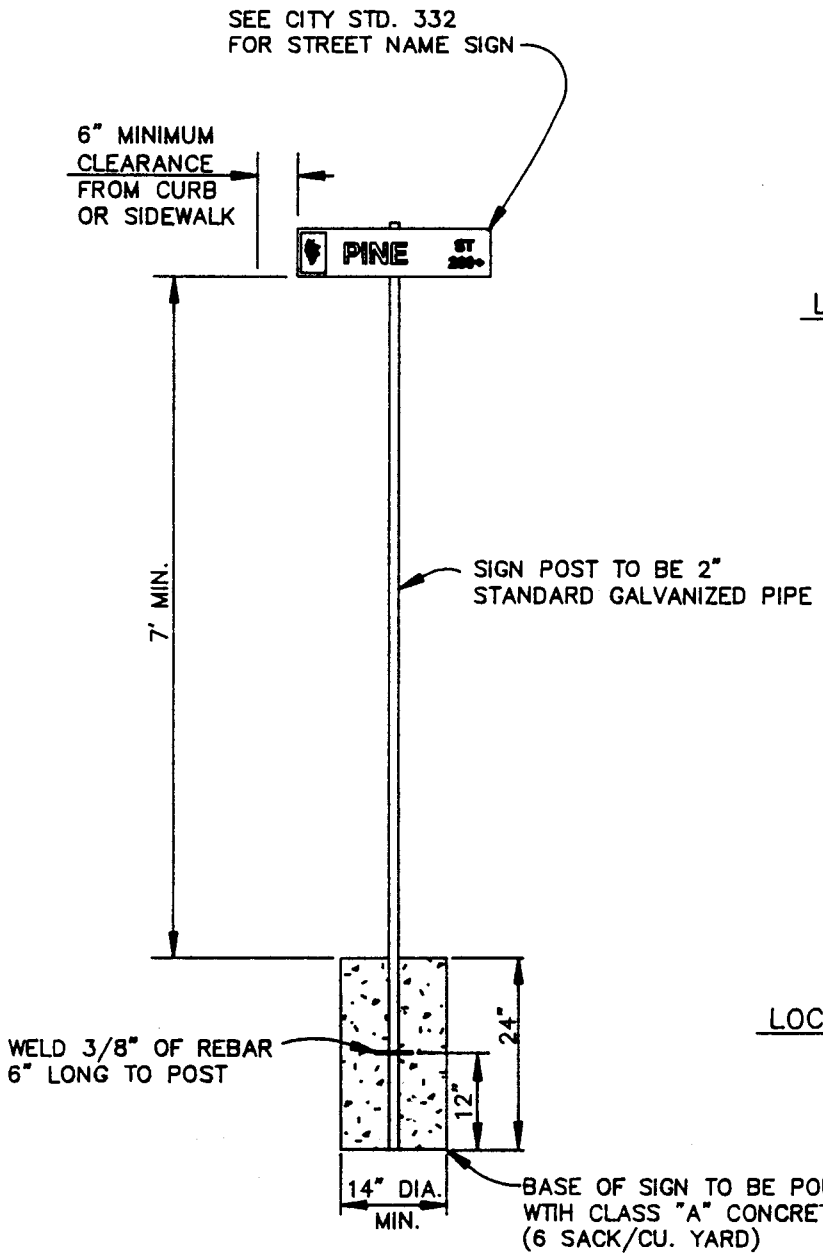

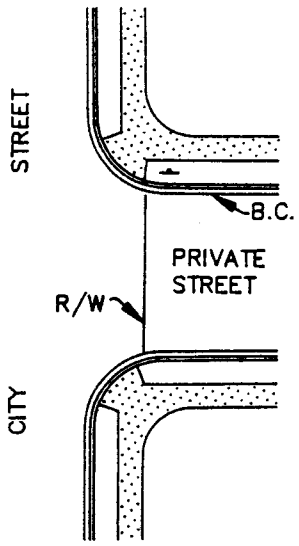

ALT. "A"
LOCATION ON CURB RETURN

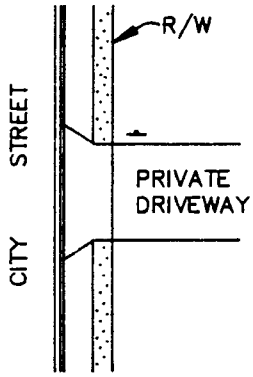

ALT. "B"
LOCATION ON DRIVEWAY APPROACH

SCALE: NONE	CITY OF ST. HELENA	DATE: NOV. 1993
DRAWN: DRH	STREET NAME SIGN INSTALLATION PRIVATE STREETS	STD. NO.
CHK:		331B
APPVD:		

NOTES:

1. LETTERS SHALL BE 4" SERIES C, UPPER CASE. NUMBERS AND ARROW SHALL BE 2".
2. PUBLIC AND PRIVATE STREET SIGN SHALL HAVE SCREENED REFLECTIVE SILVER LETTERS, NUMBERS AND ARROW ON A SCREENED UNREFLECTIVE ST. HELENA BURGANDY.
3. PUBLIC AND PRIVATE STREET NAMES SHALL NOT BE COMBINED ON THE SAME POLE.
4. SIGNS SHALL BE FINISHED WITH "SAFE FACE" PROTECTIVE FINISH.
5. ALL ENDS SHALL BE SQUARE CUT.
6. A 3 1/2" x 5 1/2" REFLECTIVE SILVER BACKED LOGO SHALL BE PROVIDED ON LEFT SIDE OF PLATE WITH BURGANDY GRAPES AND GREEN LEAVES PURSUANT TO DETAIL PER CITY AS SUPPLIED BY HAWKINS TRAFFIC SAFETY SUPPLY OR EQUIVALENT.

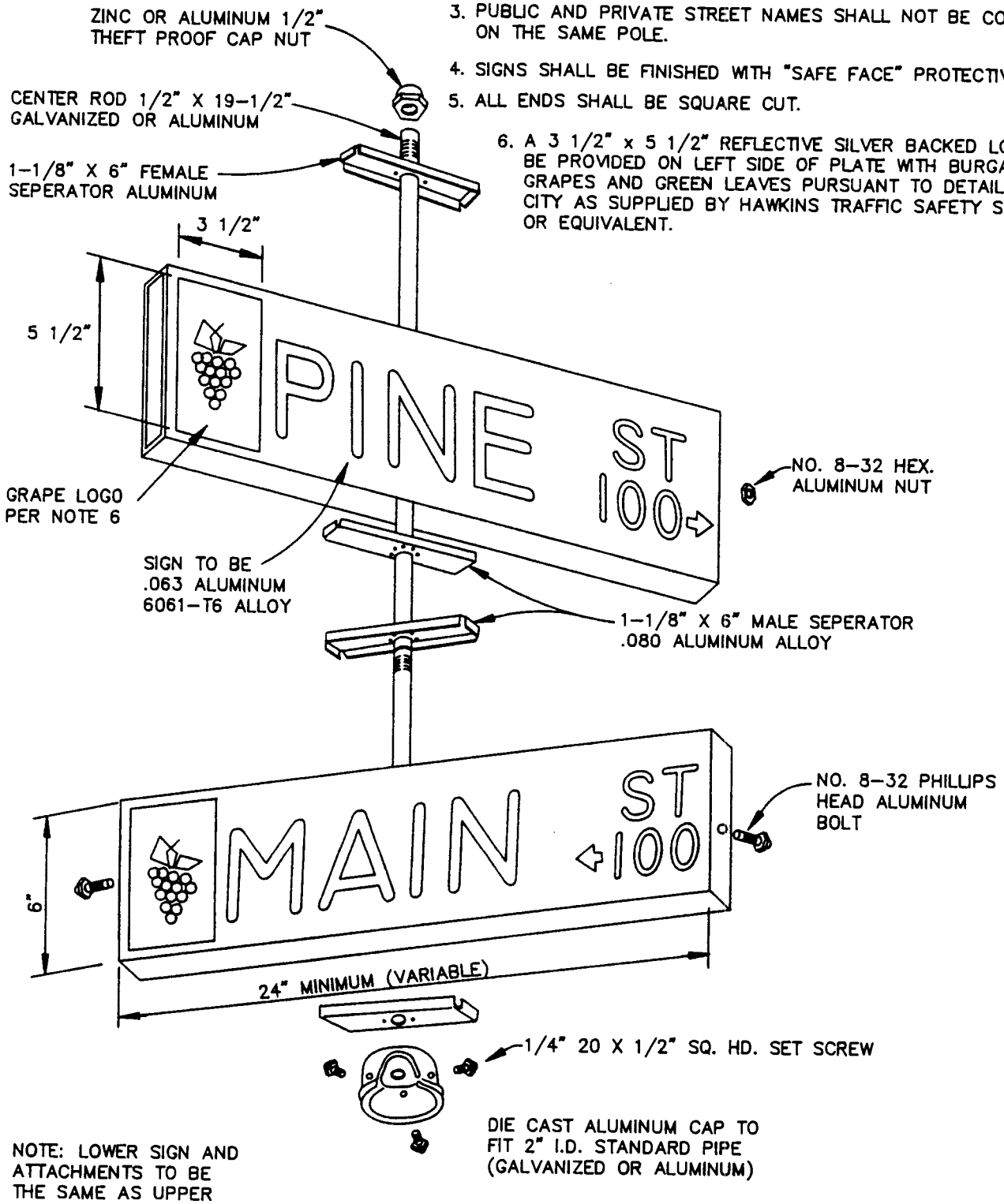

NOTE: LOWER SIGN AND ATTACHMENTS TO BE THE SAME AS UPPER

SCALE: NONE	CITY OF ST. HELENA	DATE: NOV. 1993
DRAWN: DRH	STREET NAME SIGN STANDARD SPECIFICATIONS	STD. NO.
CHK:		332
APPVD:		

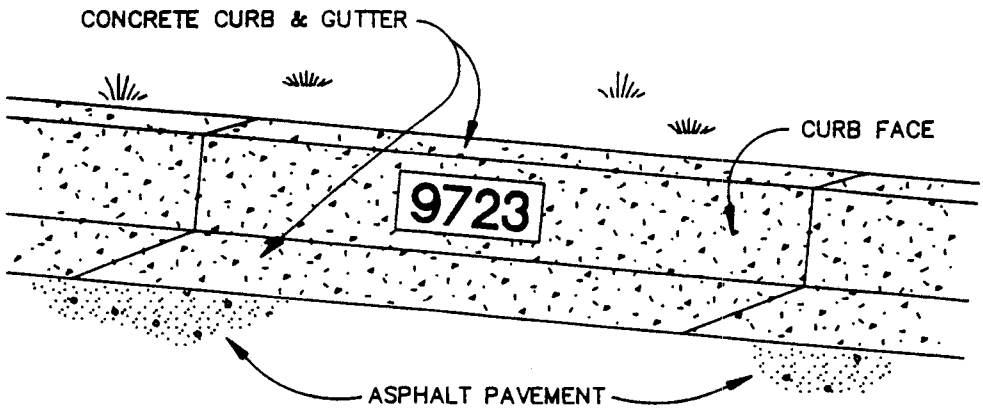

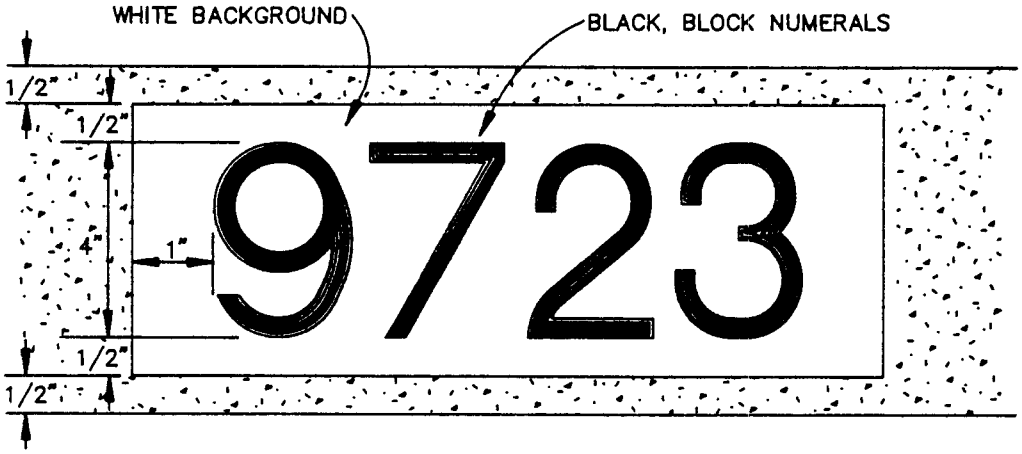

NOTES:

1. USE INTERLOCKING STENCILS FOR PROPER SPACING.
2. USE QUALITY GRADE ENAMEL PAINTS.

SCALE: NONE	CITY OF ST. HELENA	DATE: NOV. 1993
DRAWN: DRH	ADDRESS PAINTING ON CURB FACE	STD. NO. 333
CHK:		
APPVD:		

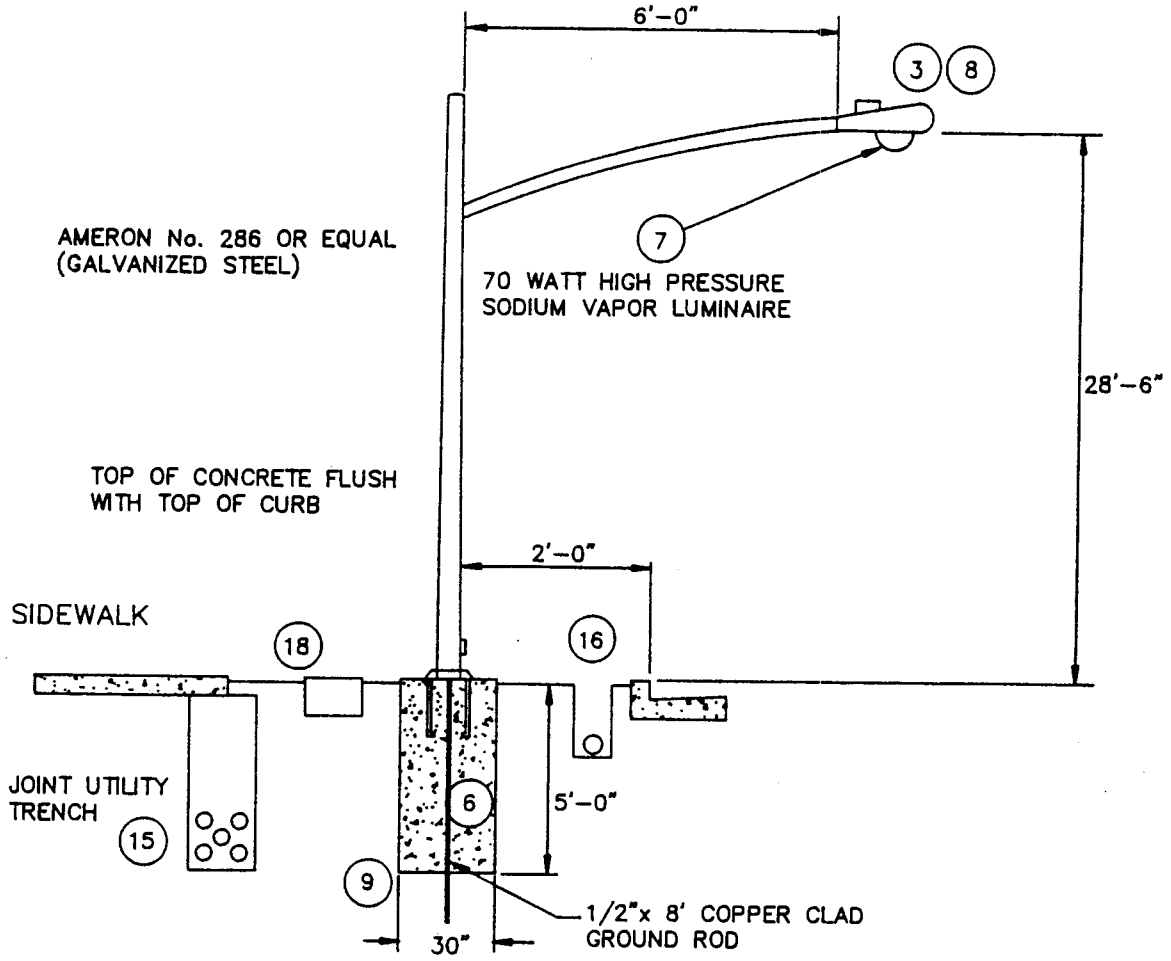

NOTES:

1. STREET LIGHT LOCATIONS SHALL BE SHOWN ON THE IMPROVEMENT PLANS.
2. DEVELOPER SHALL CONTACT PG&E TO ESTABLISH STREET LIGHT SERVICE LOCATIONS, THEN SUBMIT TWO SETS OF STREET LIGHT SERVICE LOCATION MAP TO THE CITY OF ST. HELENA PUBLIC WORKS DEPARTMENT PRIOR TO FINAL PROJECT APPROVAL.
3. LAMP SIZE MAY BE INCREASED ON COLLECTOR AND ARTERIAL STREETS AND AS OTHERWISE DETERMINED BY THE PUBLIC WORKS DEPARTMENT.
4. STREET LIGHTS SHALL BE INSTALLED BY THE DEVELOPER IN ACCORDANCE WITH RATE SCHEDULE LS2A.
5. POLE SPACING SHALL PROVIDE AN ADEQUATE LEVEL OF ILLUMINATION AS DETERMINED BY THE CITY OF ST. HELENA PUBLIC WORKS DEPARTMENT.
6. BOLTS SHALL BE 1" X 36" GALVANIZED STREET LIGHT BOLTS WITH 11" BOLT CIRCLE. FOR NON-STANDARD POLES REFER TO MANUFACTURER'S SPECS FOR BOLT SIZE.
7. STREET LIGHT FIXTURE SHALL BE OUTDOOR LIGHTING LUMINAIRE (COBRAHEAD DESIGN) 120 VOLT, 60HZ, REGULATED BALLAST WITH TYPE III REFRACTOR.
8. PHOTO ELECTRIC CONTROL SHALL BE WEATHERPROOF DUAL VOLTAGE PHOTO ELECTRIC RELAY WITH TWIST LOCK RECEPTACLE.
9. POLE BASE FOOTING SHALL BE MINIMUM 5' DEEP BY 30" WIDE WITH NO LOOSE MATERIAL IN BOTTOM. POUR BASE AGAINST UNDISTURBED SOIL.

SCALE: NONE	CITY OF ST. HELENA	DATE: NOV. 1993
DRAWN: DRH	STANDARD RESIDENTIAL STREET LIGHT	STD. NO.
CHK:		334A
APPVD:		

NOTES: (CONT'D)

10. PRECAST BASES WILL NOT BE ALLOWED UNLESS BACKFILLED WITH CONCRETE.

11. IN AREAS WHERE THERE IS A CONFLICT WITH PG&E SECONDARY (AERIAL) A 20' STREET LIGHT POLE (G.E. #C999H438 OR EQUAL) MAY BE SUBSTITUTED.

12. WHEN SIDEWALK IS ADJACENT TO CURB AND LESS THAN 6' WIDE, THE FRONT OF THE POLE SHALL BE 4'-6" FROM THE FACE OF CURB AND THE STREET LIGHT ARM SHALL BE 8' LONG.

13. CONDUIT ELBOWS IN POLE BASES SHALL BE 1 1/2" SCHEDULE 40 FULL 36" SWEEP PVC WITH NO CONNECTIONS IN CONCRETE POUR.

14. CONDUIT SIZE SHALL BE MINIMUM 1 1/2' SCHEDULE 40 PVC. ALL JOINTS SHALL BE CLEANED AND PRIMERED PRIOR TO GLUEING.

15. CONDUIT SHALL BE PLACED IN THE JOINT UTILITY TRENCH WHENEVER IT IS POSSIBLE.

16. WHEN CONDUIT CANNOT BE PLACED IN THE JOINT UTILITY TRENCH, IT SHALL BE PLACED AGAINST THE BACK OF THE CURB 18" DEEP, AND TWO THIRDS OF THE TRENCH SHALL BE BACKFILLED WITH SAND. A TRENCHING MAP SHALL THEN BE SUBMITTED TO THE CITY OF ST HELENA.

17. CONDUCTORS SHALL BE MINIMUM NO. 10 THWN (ONE WHITE, ONE BLACK) PULLED WITH A NO. 10 BARE COPPER BOND WIRE. BOND WIRE SHALL CONNECT TO ALL POLES AND GROUND RODS IN THE SYSTEM.

18. PULL BOXES SHALL BE PLACED NEXT TO EACH STREET LIGHT AND AT PG&E SECONDARY BOX LOCATIONS THAT FEED STREET LIGHTS. ADDITIONAL PULL BOXES SHALL BE INSTALLED IN CONDUIT RUNS EXCEEDING 200 FEET, OR AS OTHERWISE DIRECTED BY THE CITY OF ST HELENA PUBLIC WORKS DEPARTMENT. IF THE DISTANCE BETWEEN THE PG&E SECONDARY BOX AND THE STREET LIGHT IS 25 FEET AND UNDER, ONLY ONE PULL BOX SHALL BE REQUIRED. IT SHALL BE PLACED NEXT TO THE SECONDARY BOX. WHEN PULL BOXES ARE INSTALLED IN TRAFFIC AREAS, THE LID SHALL BE STEEL CHECKER PLATED.

19. TYPICAL STREET LIGHT INSTALLATIONS:

(SECONDARY BOX SERVICE INSTALLATION)

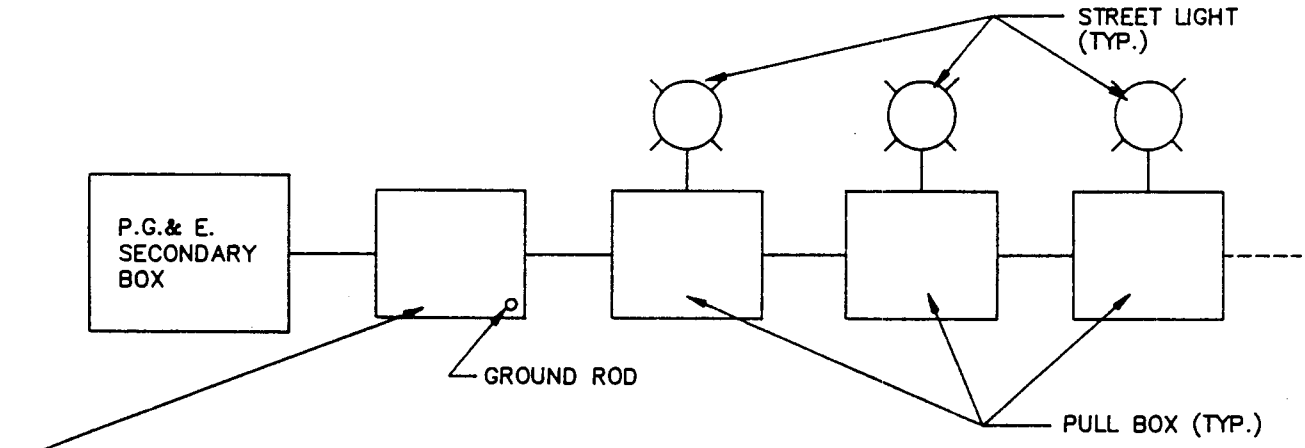

NOTE: INSTALL No. 3-1/2 PULL BOX WITH 1/2"x 8' COPPER CLAD GROUND ROD. INSTALL FUSE HOLDER WITH 30 AMP FUSE. EXTEND CONDUIT AND SERVICE WIRES (EXCEPT GROUND WIRE) TO P.G.& E. SECONDARY BOX.

NOTE: INSTALL No. 3-1/2 PULL BOX ADJACENT TO EACH STREET LIGHT POLE ALONG WITH A FUSE HOLDER AND A 10 AMP FUSE (BUSS#HEB A-A FOR FNM FUSES OR EQUAL TO); THERE SHALL BE NO SPLICES IN POLE BASES.

SCALE: NONE	CITY OF ST. HELENA	DATE: NOV. 1993
DRAWN: DRH	STANDARD RESIDENTIAL STREET LIGHT	STD. NO.
CHK:		334B
APPVD:		

(WOOD POLE SERVICE INSTALLATION)

NOTE: A 13" (WIDTH) X 24" (LENGTH) X 26" (DEPTH) SPLICE BOX IS REQUIRED WITH A 2" 90 DEGREE SCHEDULE 40 PVC CONDUIT BEND ON A 24" RADIUS FROM THE BOX TO THE POWER POLE. THE CONDUIT SHALL EXTEND NO MORE THAN 1/2" INSIDE THE BOX. THE LOCATION OF THESE FACILITIES SHALL BE DETERMINED BY A PG&E INSPECTOR. PLEASE CALL (707) 963-7133 TO SCHEDULE 24 HOURS IN ADVANCE. INSTALL 1/2" X 8' COPPER CLAD GROUND ROD IN THE FARTHEST CORNER OF THE PULL BOX AWAY FROM THE WOOD POLE. INSTALL FUSE HOLDER WITH 30 AMP FUSE. PG&E WILL PROVIDE THE WIRES DOWN THE POLE TO THE BOX AND CONNECT TO THE WIRES IN THE BOX.

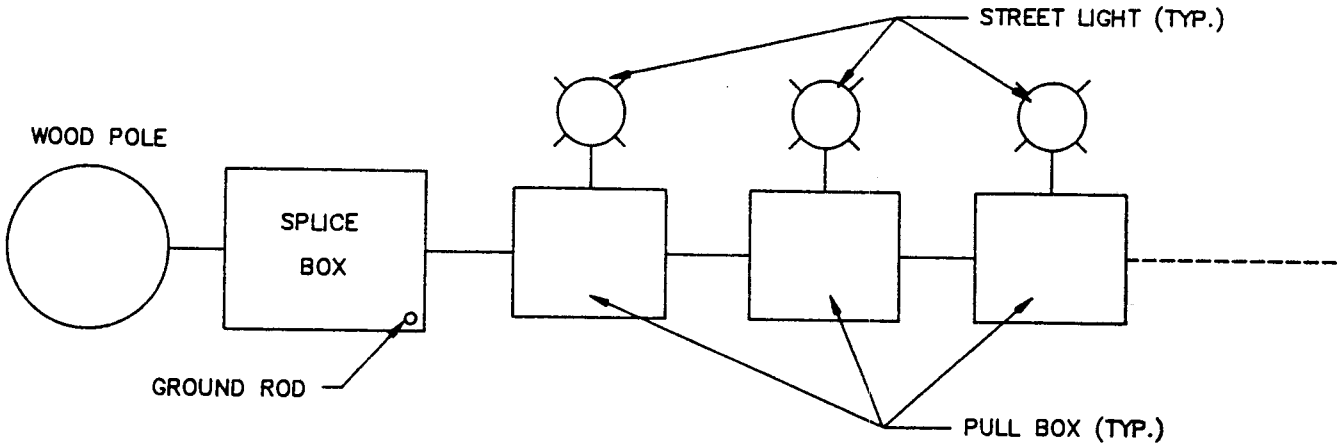

NOTE: INSTALL NO. 3 1/2 PULL BOX ADJACENT TO EACH STREET LIGHT POLE ALONG WITH A FUSE HOLDER AND A 10 AMP FUSE (BUSS # HEB A-A FOR FNM FUSES OR EQUAL TO) THERE SHALL BE NO SPLICES IN POLE BASES.

NOTES: (CONT'D)

20. THE CONTRACTOR SHALL BE RESPONSIBLE TO CALL U.S.A. (UNDERGROUND SERVICE ALERT) AT LEAST TWO WORKING DAYS PRIOR TO DIGGING HOES, TRENCHES, ETC., AT 1 (800) 642-2444.

21. CONTACT CITY OF ST. HELENA FOR INSPECTION 24 HOURS PRIOR TO POURING CONCRETE AND/OR BACKFILLING CONDUIT (707) 963-2741.

22. CONTACT CITY OF ST. HELENA FOR FINAL INSPECTION AND TURN ON.

23. ANY QUESTIONS SHOULD BE REFERRED TO THE CITY OF ST. HELENA.

SCALE: NONE	CITY OF ST. HELENA	DATE: NOV. 1993
DRAWN: DRH	STANDARD RESIDENTIAL STREET LIGHT	STD. NO.
CHK:		334C
APPVD:		

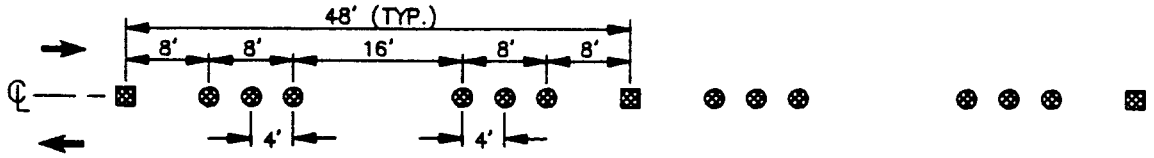

2-LANE ROADWAYS

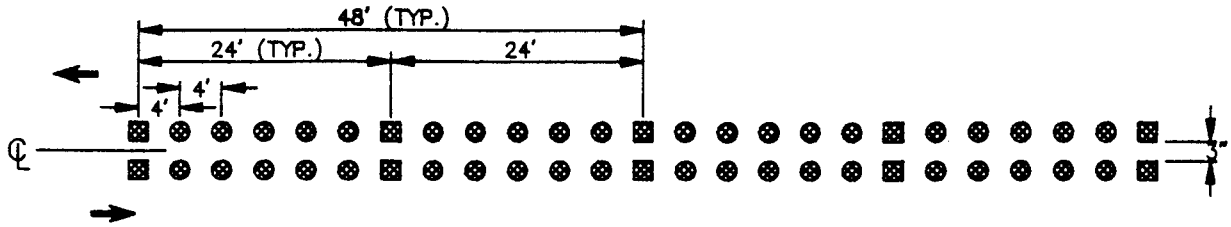

MULTI-LANE ROADWAYS

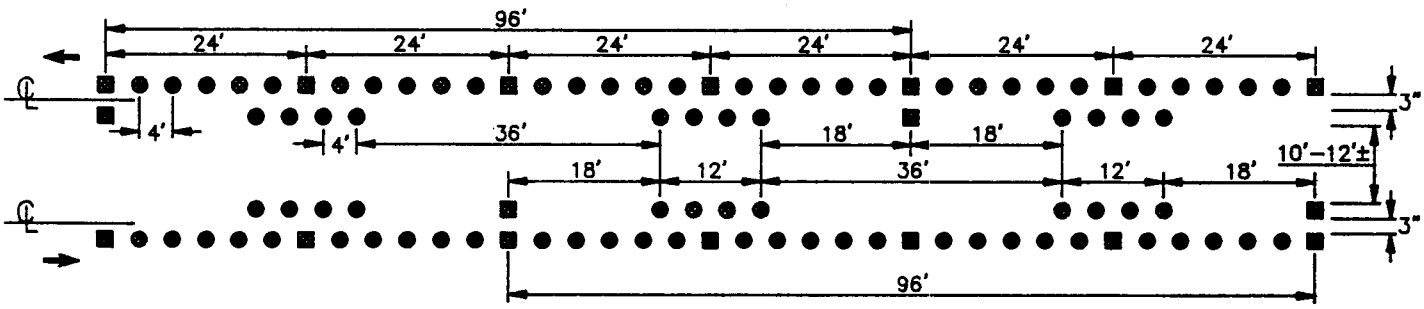

TWO-WAY LEFT TURN LANE

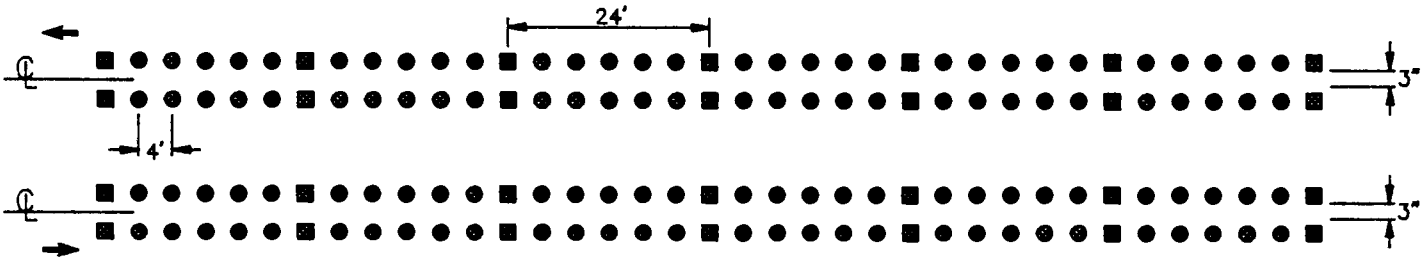

MEDIAN ISLANDS

LEGEND

- ■ TWO-WAY YELLOW REFLECTIVE MARKER
- ● NON-REFLECTIVE YELLOW MARKER
- → DIRECTION OF TRAVEL

NOTES:

1. FOR TWO LANE ROADWAYS, PLACE ADDITIONAL REFLECTORS AT 24 FT. O.C. ON CURVES WITH A RADIUS OF 750 FT. OR LESS.
2. THE FIRST AND LAST MARKER AT EACH INTERSECTION SHALL BE A REFLECTOR.
3. DESIGN SHALL CONFORM TO THESE REQUIREMENTS EXCEPT AS OTHERWISE APPROVED BY THE CITY ENGINEER.

SCALE: NONE	**CITY OF ST. HELENA**	DATE: NOV. 1993
DRAWN: DRH	PAVEMENT MARKINGS: CENTER LINES, TWO-WAY LEFT TURN LANES, AND MEDIAN ISLANDS	STD. NO.
CHK:		335
APPVD:		

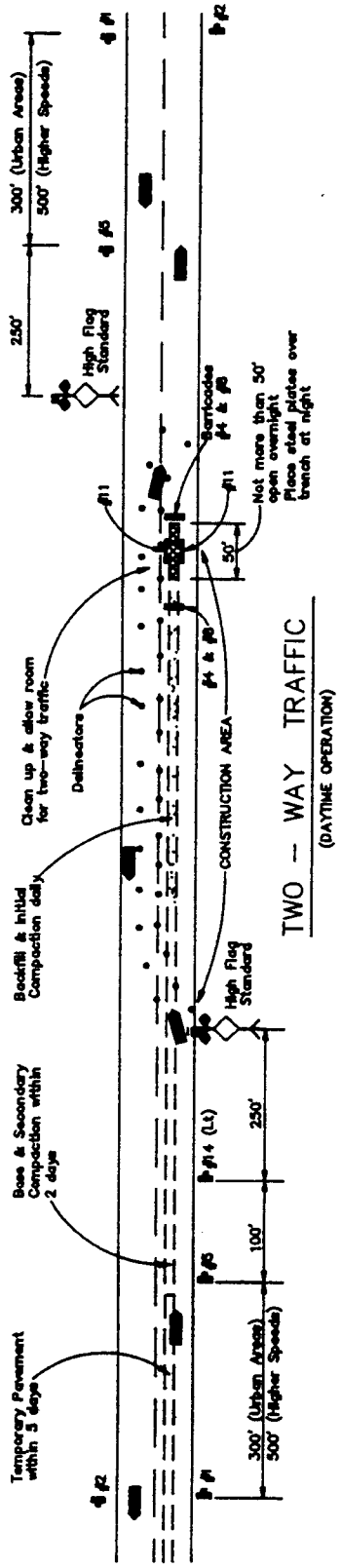

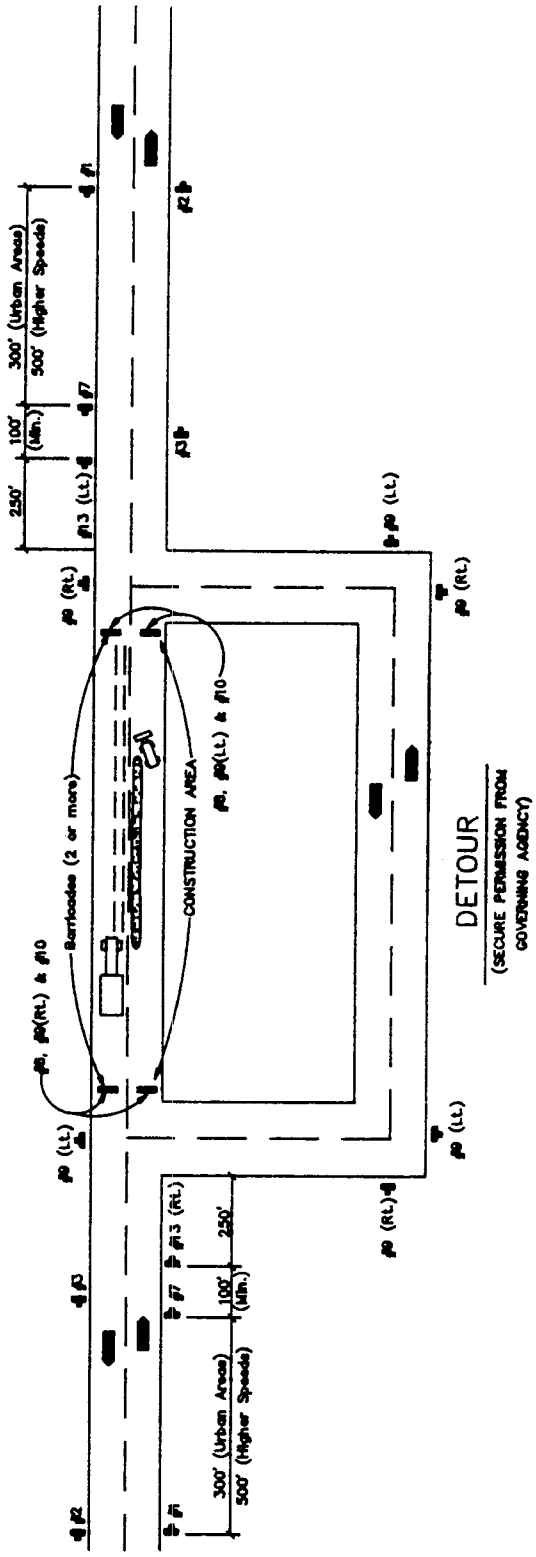

SCALE: NONE	CITY OF ST. HELENA	DATE: NOV. 199J
DRAWN: DRH	TRAFFIC CONTROL REQUIREMENTS	STD. NO.
CHK:		336A
APPVD:		

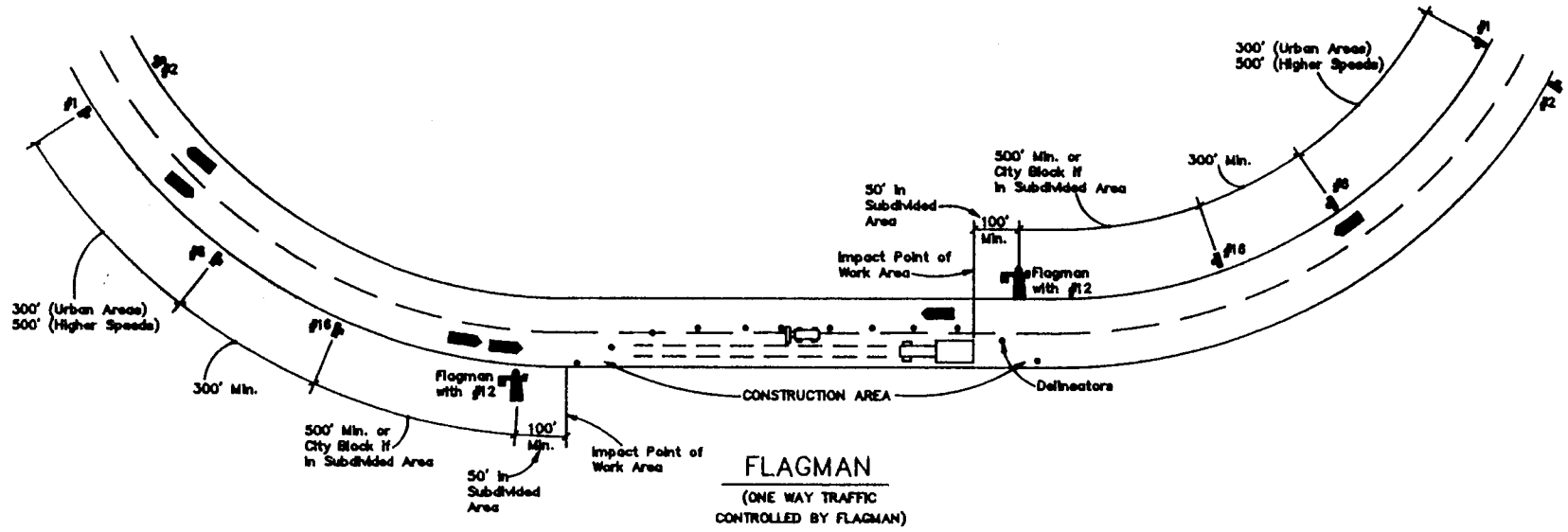

FLAGMAN

(ONE WAY TRAFFIC CONTROLLED BY FLAGMAN)

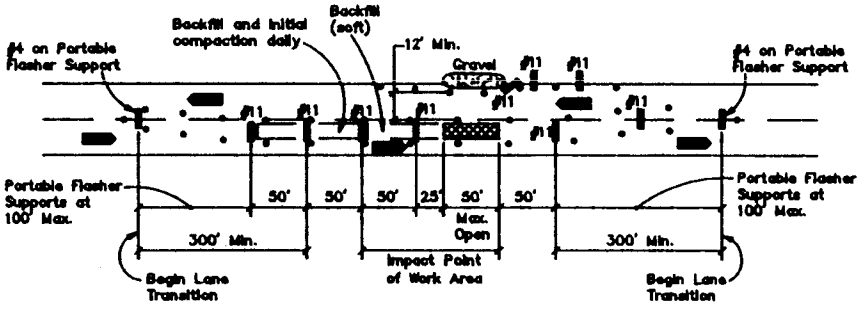

TYPICAL MINIMUM NIGHT REQUIREMENTS

(CONTRACTOR TO INSPECT REGULARLY, ESPECIALLY FLASHERS)

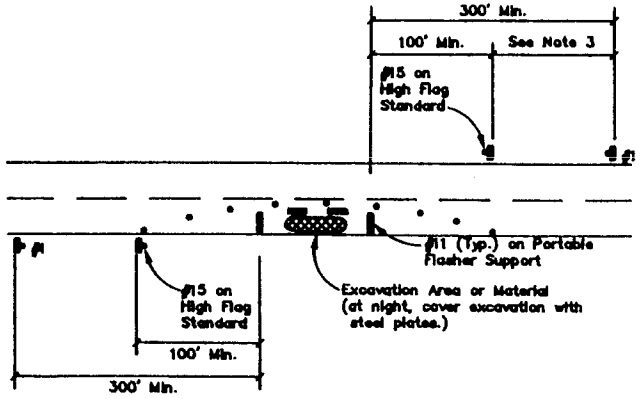

EXCAVATION

SCALE: NONE	CITY OF ST. HELENA
DRAWN: DRH	TRAFFIC CONTROL REQUIREMENTS
CHK:	
APPVD:	STD. NO. 336B
	DATE: NOV. 1993

1 (C18)
Black on Orange
30" X 30"
5" Lettering (C Series)

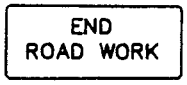

2 (C14)
Black on Orange
42" X 18"
5" Lettering (C Series)

3 (C7)
Black on Orange
30" X 18"
5" Lettering (C Series)

4 (C27)
Black on Orange
24" X 24"
(or 36" x 36" Optional)
4" Lettering (D Series)

5 (C16)
Black on Orange
48" X 48"
7" Lettering (C Series)

6 (C9A)
Black on Orange
48" X 48"

7 (C1)
Black on Orange
48" X 48"
8" Lettering (D Series)

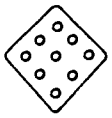

8 (TYPE N MARKER)
Orange
18" X 18"

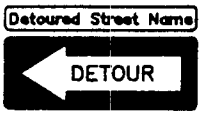

9 (C5)
Black on Orange on Black
48" x 18"
6" Lettering (D Series)
Left & Right

10 (C2)
Black on White
48" x 30"
6" Lettering (D Series)

11 (TYPE N MARKER)
3-3-1/4" Yellow
Reflectors on 15" x 6"
White Plate

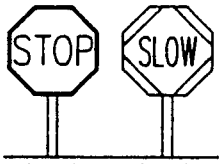

(C18) (C18)
12
White on Red and
Black on Orange on Black
24" x 24"-"8 Series C Letters
18" x 18"-6" Series C Letters
Non-Reflectorized

13 (W3)
Black on Orange
36" x 36"
Left & Right

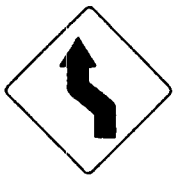

14 (W1)
Black on Orange
36" x 36"
Left & Right

15 (C22B)
Black on Orange
30" x 30"

NOTES

1. Since it is not possible to prescribe detailed standards of application for all situations which may arise, typical standards are presented here for the most common situations. These are desirable standards for normal open street situations, and additional protection should be provided for complicated situations, particularly on high speed or high volume streets. This sheet shall be used in conjunction with the "Manual of Traffic Controls for Construction and Maintenance Work Zones" issued by the State of California, Business, Transportation and Housing Agency, Department of Transportation, 1990, which shall prevail.
2. Delineators shall be placed at 50 foot intervals along lane transitional areas and at 30 foot intervals along construction areas.
3. Distance between signs and/or work area may be varied depending on terrain and traffic speed.
4. All warning signs or delineators used shall be reflectorized or illuminated.
5. During the hours when no work is in progress, Men Working signs (No. 15) and Flagman Ahead signs (No. 8) shall be covered or removed.
6. On Portable Flasher Support, the entire area of orange and white shall be reflectorized. Reflectorization shall conform to specifications listed in Section 5-04 "Barricades", of the manual listed in Note 1. The predominant color of the barricade components shall be white.

LEGEND

- Sign (Smooth side faces traffic)
- Delineator
- Portable Flasher Support
- Direction of traffic

16 (C36)
Black on Orange
48" X 48"

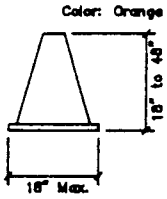

CONE DELINEATOR

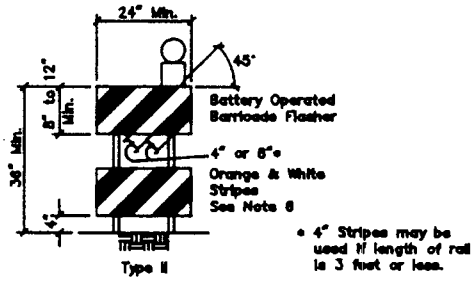

* 4" Stripes may be used if length of rail is 3 feet or less.

PORTABLE FLASHER SUPPORT BARRICADE

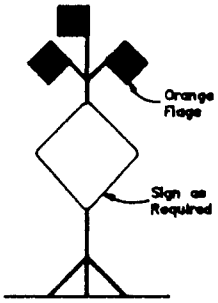

HIGH FLAG STANDARD FOR WORKING SIGNS

SCALE: NONE	CITY OF ST. HELENA	DATE: NOV. 1995
DRAWN: DRH	TRAFFIC CONTROL REQUIREMENTS	STD. NO.
CHK:		336C
APPVD:		

TRENCHES GREATER THAN 18" IN WIDTH
IN EXISTING PAVING

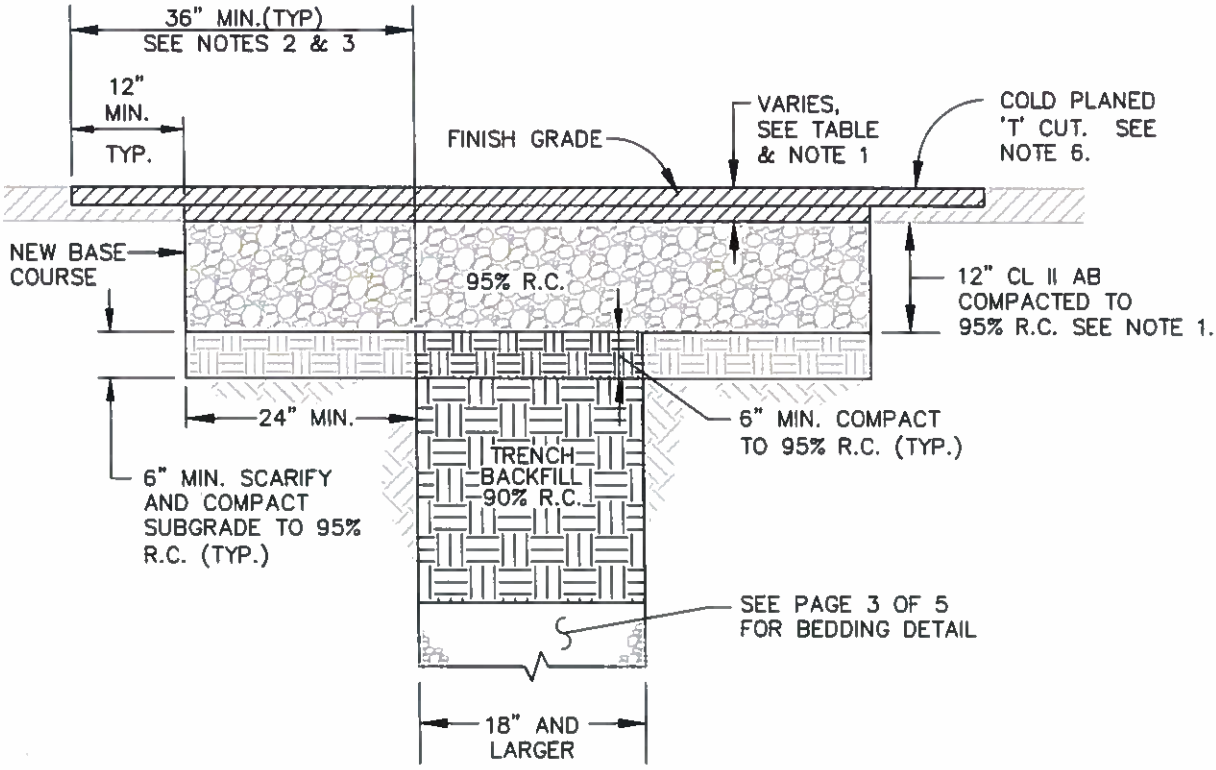

TRENCH HMA PAVING TABLE	
STREET TYPE	MIN. HMA THICKNESS
RESIDENTIAL	0.35'
COLLECTOR	0.50'
ARTERIAL/ENHANCED COLLECTOR	0.50'

NOTES:

1. THE STREET STRUCTURAL SECTION SHALL BE HOT MIX ASPHALT (HMA) (SEE TABLE FOR MIN. HMA THICKNESS) ON 12" CLASS II AB.
2. NEATLY CUT PAVEMENT AFTER TRENCH IS BACKFILLED TO SUBGRADE.
3. ADDITIONAL PAVEMENT REMOVAL: REMOVE ADDITIONAL PAVEMENT TO A PAINTED LANE STRIPE, A LIP OF GUTTER, EXISTING PAVEMENT PATCH, OR AN EDGE OF THE PAVEMENT IF SUCH STREET FEATURE IS WITHIN 3 FEET OF THE FINAL SAW CUT.
4. FULL TACK COAT COVERAGE ON ALL VERTICAL AND EXISTING HMA SURFACES.
5. RELATIVE COMPACTION IS DESIGNATED AS RC.
6. 1-1/2" SURFACE COURSE IF EXISTING HMA IS GREATER THAN OR EQUAL TO 3" THICK. IF HMA IS LESS THAN 3" THICK, REPLACE WITH FULL DEPTH HMA.

SCALE: NONE	CITY OF ST. HELENA	DATE: SEPT 2015
DRAWN: CLG	STANDARD TRENCH DETAIL	STD. NO.
CHK:		401
APPVD:		

Xrefs: Images:
Path: F:\BMAP - STD\St Helena\STDS\STHEL400\dwg\401 rev 09-22-15.dwg Layout Name: 401-1 Plot Date: Sep 28, 2015 at 04:31 pm

TRENCHES LESS THAN OR EQUAL TO 18" IN WIDTH
IN EXISTING PAVING
(FOR WATER SERVICES, SEWER LATERALS AND GAS, TELEPHONE AND ELECTRIC SERVICES)

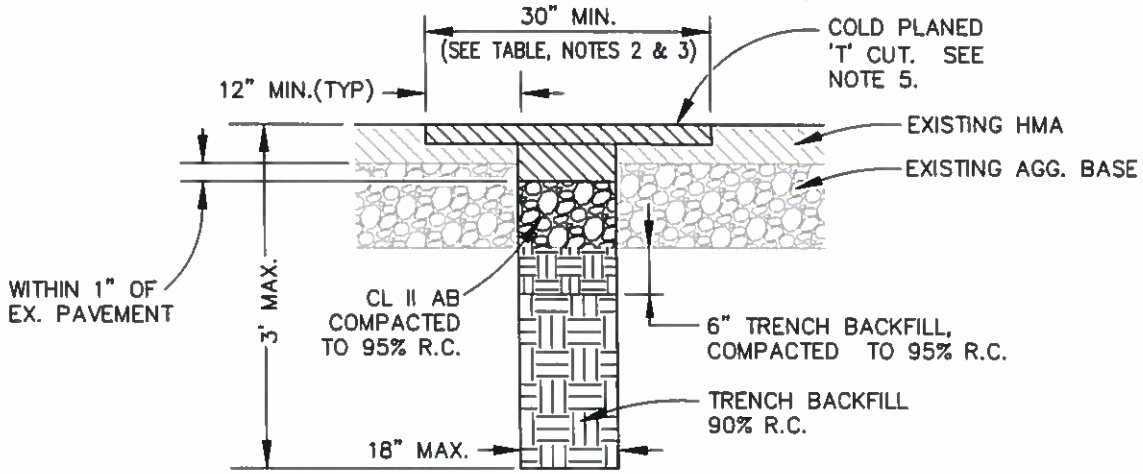

SMALL HOLES
(ONLY USED IN EXISTING PAVED AREAS)

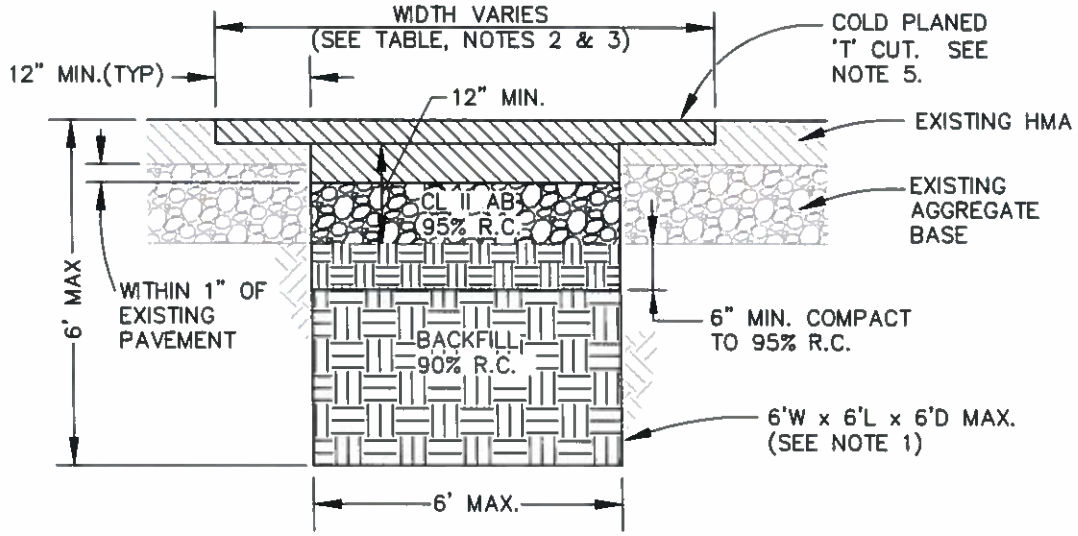

NOTES:

1. IF ANY DIMENSION IS GREATER THAN 6' OR THE HOLE IS NOT BACKFILLED ON THE SAME DAY OF EXCAVATION, USE TRENCH BACKFILL AND SURFACING DETAIL (PAGE 1 OF 5).
2. NEATLY CUT PAVEMENT AFTER TRENCH IS BACKFILLED TO SUBGRADE.
3. ADDITIONAL PAVEMENT REMOVAL: REMOVE ADDITIONAL PAVEMENT TO A PAINTED LANE STRIPE, A LIP OF GUTTER, EXISTING PAVEMENT PATCH, OR AN EDGE OF THE PAVEMENT IF SUCH STREET FEATURE IS WITHIN 3 FEET OF THE FINAL SAW CUT.
4. FULL TACK COAT COVERAGE ON ALL VERTICAL AND EXISTING HOT MIX ASPHALT (HMA) SURFACES.
5. 1-1/2" SURFACE COURSE IF EXISTING HMA IS GREATER THAN OR EQUAL TO 3" THICK. IF HMA IS LESS THAN 3" THICK, REPLACE WITH FULL DEPTH HMA.

TRENCH HMA PAVING TABLE	
STREET TYPE	MIN. HMA THICKNESS
RESIDENTIAL	0.35'
COLLECTOR	0.50'
ARTERIAL/ENHANCED COLLECTOR	0.50'

SHEET 2 OF 5

SCALE: NONE	CITY OF ST. HELENA	DATE: SEPT 2015
DRAWN: CLG CHK: APPVD:	STANDARD TRENCH DETAIL	STD. NO. 401

Xrefs: Images:
Path: F:\BMAP-STD\St Helena\STDS\STHEL400\dwg\401 rev 09-22-15.dwg Layout Name: 401-2 Plot Date: Sep 28, 2015 at 04:31 pm

TRENCH WIDTH FOR HDPE PIPE	
PIPE SIZE*	TRENCH WIDTH (MIN.)
15"	36"
18"	48"
24"	54"
30"	60"
36"	72"
PIPE MUST BE CENTERED IN THE TRENCH. *INSIDE DIAMETER.	

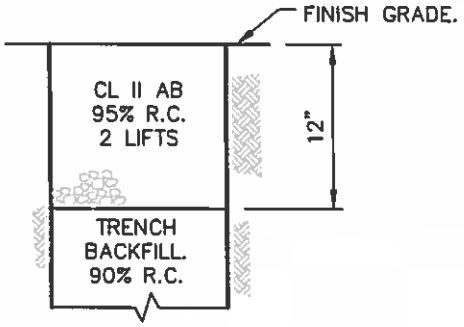

TYPE B

(SHOULDER AREAS)

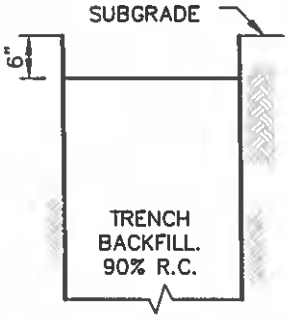

TYPE C

(STREETS UNDER CONSTRUCTION)

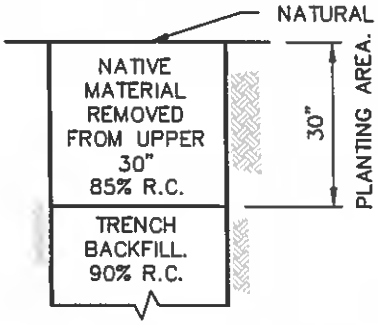

TYPE D

(PUBLIC UTILITY EASEMENTS)
(OUTSIDE STREET AREA)

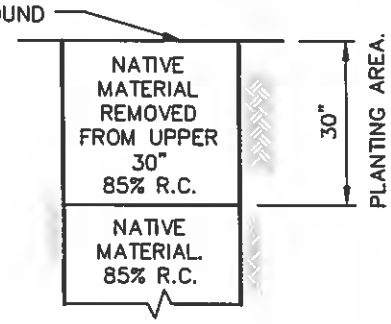

TYPE E

(PUBLIC UTILITY EASEMENTS)
(UNDEVELOPED AREAS)

TRENCH BACKFILL

(TYPE TO BE SHOWN ON PLANS)

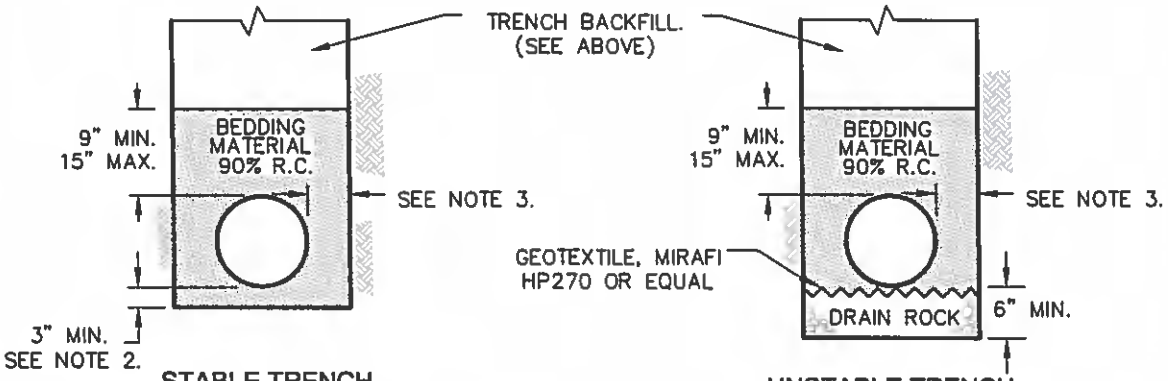

STABLE TRENCH

UNSTABLE TRENCH

PIPE BEDDING

NOTES:

1. RELATIVE COMPACTION IS DESIGNATED RC.
2. ¼ PIPE O.D. MINIMUM WHEN EXCAVATION IS IN ROCKY GROUND.
3. PIPE DIAMETER 18" OR LESS: 6" MIN., 9" MAX. PIPE DIAMETER GREATER THAN 18": 9" MIN., 12" MAX. SEE TABLE ABOVE FOR HDPE PIPE TRENCH WIDTHS.

SCALE: NONE	CITY OF ST. HELENA	DATE: SEPT 2015
DRAWN: CLG	STANDARD TRENCH DETAIL	STD. NO.
CHK:		401
APPVD:		

Xrefs: Images:
Path: F:\BMAP_STD\St Helena\STDS\STHEL400\DRAWINGS\401 rev 09-22-15.dwg Layout Name: 401-3 Plot Date: Sep 23, 2015 at 10:18 am

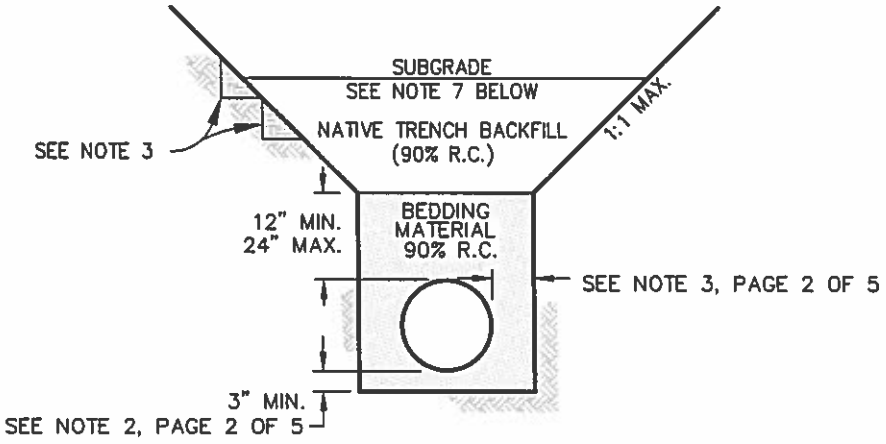

TYPE F

(NEW STREETS UNDER CONSTRUCTION)

NOTES:

1. ROCKS EXCEEDING 6" SHALL NOT BE PERMITTED WITHIN THE TRENCH SECTION.
2. THE MAXIMUM DEPTH OF NATIVE BACK FILL MATERIAL SHALL NOT EXCEED 10 FEET.
3. EMBANKMENT CONSTRUCTION METHODS SHALL BE USED. ALL SLOPES MUST BE KEYED-IN A MINIMUM OF ONE FOOT AS THE TRENCH IS BACK FILLED.
4. THE MINIMUM EQUIPMENT REQUIRED FOR COMPACTION OF NATIVE BACK FILL MATERIAL SHALL CONSIST OF A SHEEPSFOOT VIBRATORY ROLLER WITH A MINIMUM DRUM WIDTH OF 48", A MINIMUM GROSS WEIGHT OF 4600 LB., OR MUST MEET APPROVAL OF THE TOWN ENGINEER.
5. THE CONTRACTOR SHALL BE RESPONSIBLE FOR COORDINATING WITH THE PRIVATE SOILS ENGINEER AND THE TOWN INSPECTOR 48 HOURS PRIOR TO EXCAVATION.
6. THE PRIVATE SOILS ENGINEER SHALL PROVIDE TESTING AND OBSERVATIONS ON A FULL TIME BASIS DURING ALL NATIVE BACK FILLING OPERATIONS. THE PRIVATE SOILS ENGINEER IS RESPONSIBLE FOR THE VERIFICATION OF ALL NATIVE BACK FILL WORK INCLUDING COMPACTION AND UNIFORM MOISTURE CONDITIONING, AND THAT MOISTURE CONTENT IS ABOVE OPTIMUM MOISTURE TO THE EXTENT APPROPRIATE FOR THE NATIVE MATERIAL BEING USED.
7. STREETS WHERE NATIVE TRENCH BACK FILL IS USED, TREATED (LIME, CEMENT, FLYASH, ETC.) SUB GRADE SHALL NOT BE USED AS PART OF THE STRUCTURAL SECTION.

SCALE: NONE	CITY OF ST. HELENA	DATE: SEPT 2015
DRAWN: CLG	STANDARD TRENCH DETAIL	STD. NO.
CHK:		401
APPVD:		

Xrefs: Images:
Path: F:\BMAP-STD\St Helena\STDS\STHEL400\DRAWINGS\401 rev 09-22-15.dwg Layout Name: 401-4 Plot Date: Sep 23, 2015 at 10:17 am

MATERIAL SPECIFICATIONS

DRAIN ROCK MAY BE USED AS BEDDING UNDER PIPE FOR SLOPES LESS THAN 8%. DRAIN ROCK SHALL BE 100% CRUSHED AND SHALL CONFORM TO THE FOLLOWING GRADING:

1-1/2"	1"	1/2"	#4
100	95-100	0-30	0-4

CUT OFF WALLS SHALL BE PROVIDED WHEN SHOWN ON THE PLANS OR REQUIRED BY THE ENGINEER.

PIPE BEDDING FOR SLOPES LESS THAN OR EQUAL TO 8% SHALL HAVE A MINIMUM SAND EQUIVALENT VALUE OF 30 AND SHALL CONFORM TO THE FOLLOWING GRADING:

1"	3/4"	3/8"	#4	#200
100	90-100	65-100	30-100	0-15

PIPE BEDDING FOR SLOPES GREATER THAN 8% SHALL HAVE A MINIMUM SAND EQUIVALENT OF 30 AND SHALL CONFORM TO THE FOLLOWING GRADING:

1"	3/4"	3/8"	#4	#30	#200
100	90-100	65-100	30-100	10-100	0-15

TRENCH BACKFILL SHALL CONFORM TO THE FOLLOWING GRADING AND HAVE A MINIMUM SAND EQUIVALENT VALUE OF 25.

3"	#4	#30
100	40 -100	10-100

WHEN SAND BEDDING IS PROPOSED FOR UTILITY CONDUIT INSTALLATION, THE MATERIAL SPECIFICATIONS SHALL BE PROVIDED TO THE ENGINEER FOR REVIEW 5 WORKING DAYS BEFORE CONSTRUCTION.

AGGREGATE BASE SHALL CONFORM TO THE REQUIREMENTS OF SECTION 26 OF THE STATE STANDARD SPECIFICATIONS. HOT MIX ASPHALT SHALL CONFORM TO THE REQUIREMENTS OF SECTION 39 OF THE STATE STANDARD SPECIFICATIONS.

COMPACTION REQUIREMENTS

(AS SHOWN ON PAGES 1 OF 5 – 3 OF 5 AND IN THE FOLLOWING MODIFICATIONS)

DRAIN ROCK SHALL BE CONSOLIDATED WITH A SURFACE VIBRATOR.

PIPE BEDDING MATERIAL USED TO GRADE THE TRENCH SHALL BE CONSOLIDATED WITH A SURFACE VIBRATOR WHEN IT IS PLACED OVER DRAIN ROCK OR WHEN DEPTH IS GREATER THAN 6 INCHES.

TRENCH BACKFILL MAY NOT BE COMPACTED BY JETTING.

SCALE: NONE	CITY OF ST. HELENA	DATE: SEPT 2015
DRAWN: CLG	STANDARD TRENCH DETAIL	STD. NO.
CHK:		401
APPVD:		

Xrefs: Images:
Path: F:\BMAP-STD\St Helena\STDS\STHEL400\DRAWINGS\401 rev 09-22-15.dwg Layout Name: 401-5 Plot Date: Sep 23, 2015 at 10:16 am

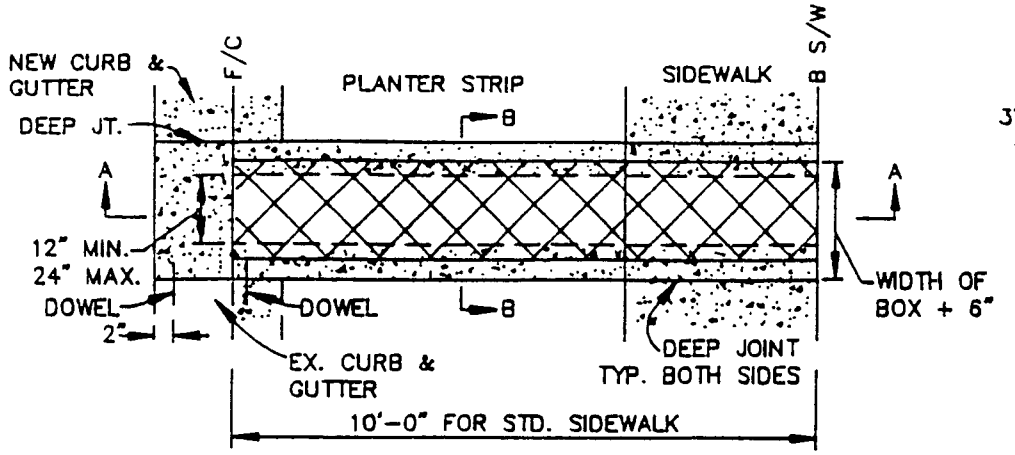

PLAN

NOTE: WHERE CURB & GUTTER ARE EXISTING, THE CONTRACTOR SHALL SAWCUT & REMOVE THE CURB & GUTTER AND INSTALL 1/2" X 8" DOWELS AS SHOWN

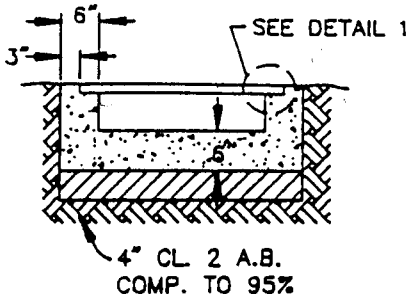

SECTION B-B

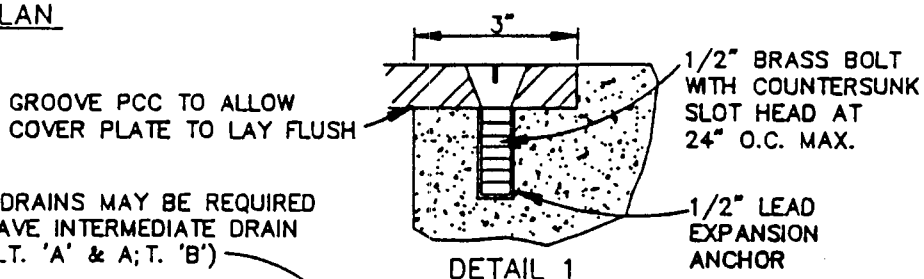

DETAIL 1

AREA DRAINS AND ROOF DRAINS MAY BE REQUIRED TO CONNECT DIRECTOR HAVE INTERMEDIATE DRAIN INLET BOX. TYPICAL (ALT. 'A' & A;T. 'B')

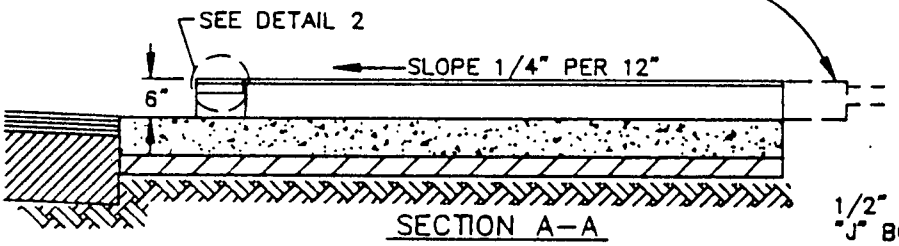

SECTION A-A

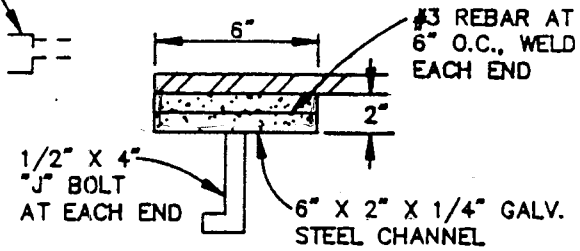

DETAIL 2

NOTE: ALL CONCRETE SHALL BE CLASS A (6 SACKS PER CUBIC YARD)

ALTERNATE 'A'

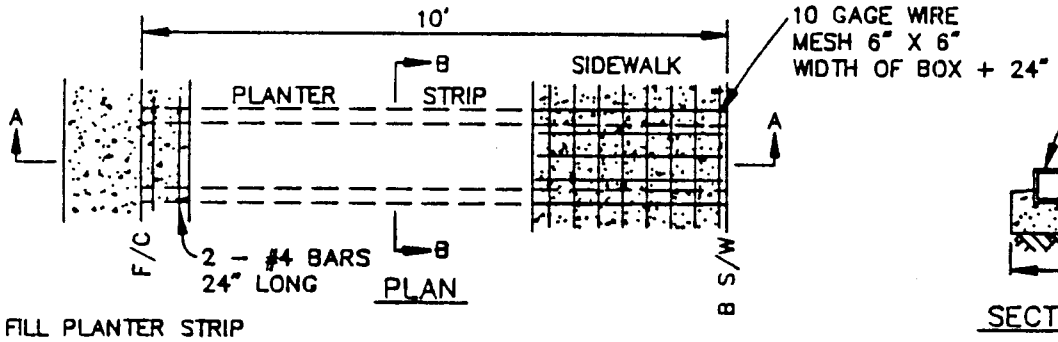

PLAN

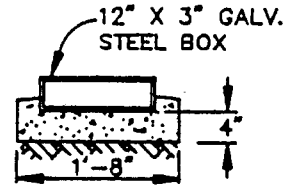

SECTION B-B

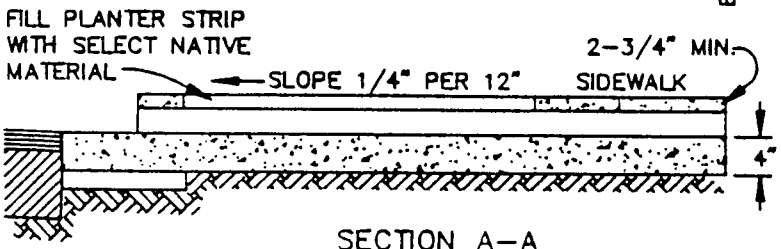

SECTION A-A

ALTERNATE 'B'

NOTES:
1. WITH APPROVAL OF PUBLIC WORKS DEPT., WIDTH OF BOX MAY VARY FROM 6" TO 12".
2. GALVANIZED STEEL TO BE 1/4" THICK.
3. ALL CONCRETE SHALL BE CLASS "A" (6 SACKS PER CUBIC YARD).
4. IF CURB & GUTTER IS EXISTING, INSTALL DOWELS AS PER ALTERNATE 'A'.

SCALE: NONE	CITY OF ST. HELENA	DATE: NOV. 1993
DRAWN: DRH	SIDEWALK CROSS DRAINS	STD. NO.
CHK:		501
APPVD:		

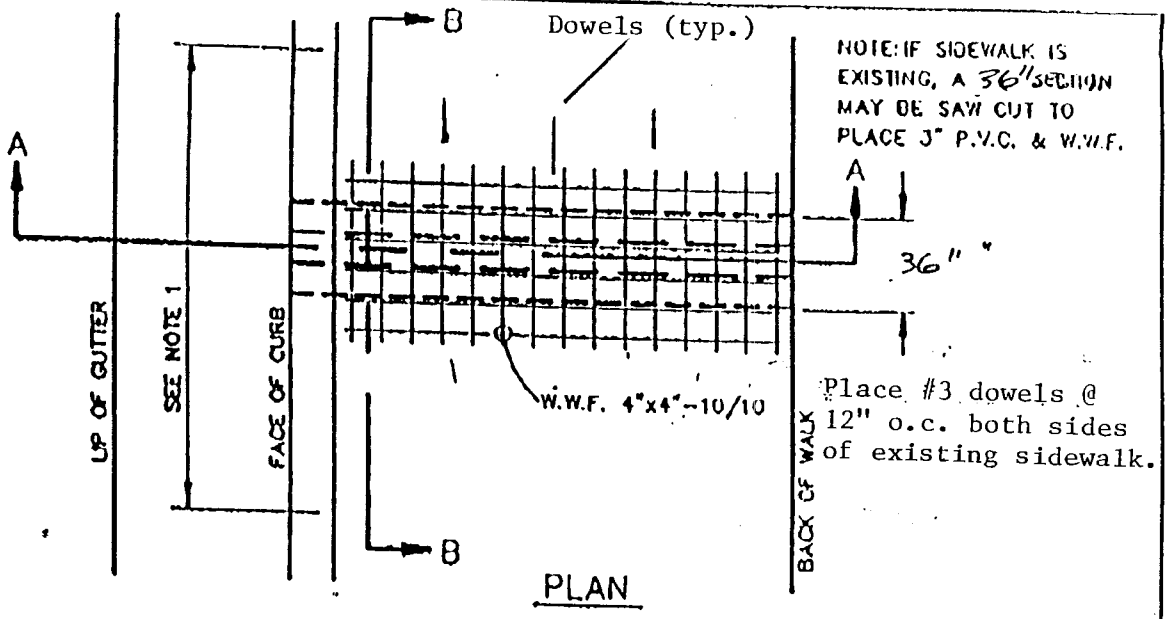

PLAN

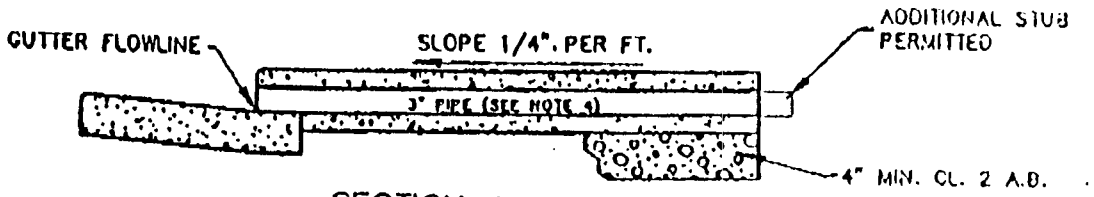

SECTION A–A

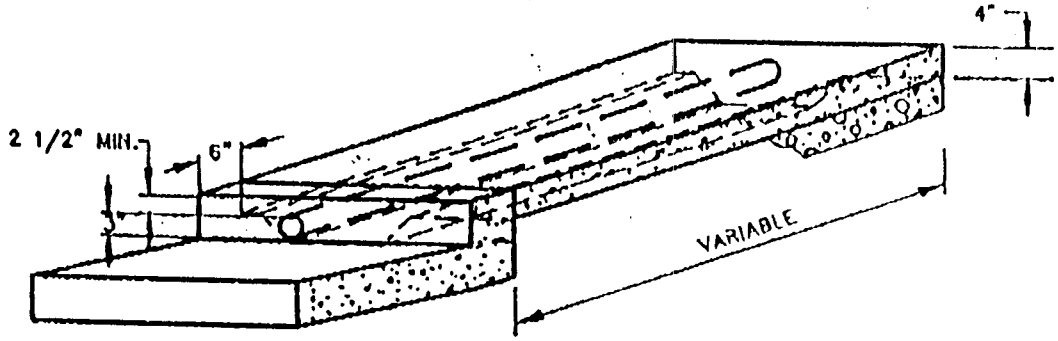

CURB OPENING DETAIL

NOTES:

1. WIRE MESH SHALL BE 2' WIDE. LENGTH SHALL EQUAL SIDEWALK WIDTH MINUS 4". IF SIDEWALK EXISTING, SEE NOTE ABOVE.
2. ON SITE DRAINAGE AND LOCATION OF CURB OUTLETS SHALL BE BY THE OWNER TO THE SATISFACTION OF THE TOWN ENGINEER.
3. DRAIN PIPE SHALL BE INSTALLED SO THAT TOP OF PIPE IS 2 1/2" MIN. BELOW FINISH GRADE AT BACK OF SIDEWALK
4. SIDEWALK DRAIN TO BE 3" SCH 40 HEAVY WALL RIGID POLYVINYL CHLORIDE PIPE OR APPROVED SUBSTITUTE.

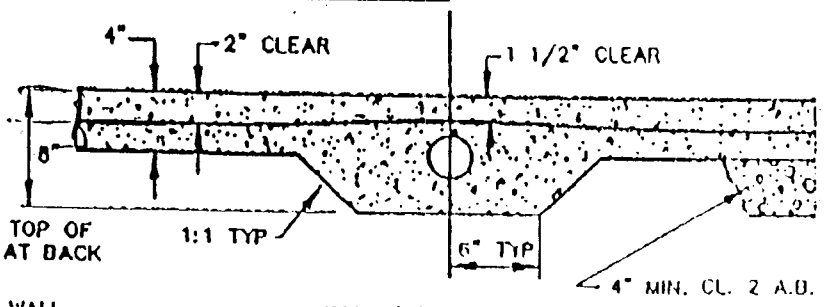

SECTION B–B

CITY OF ST. HELENA	SIDEWALK DRAIN	STD. NO. 501.A
SCALE: NONE	DRAWN: DRH	CHK:	APPVD: MSD	DATE: 2/14/97

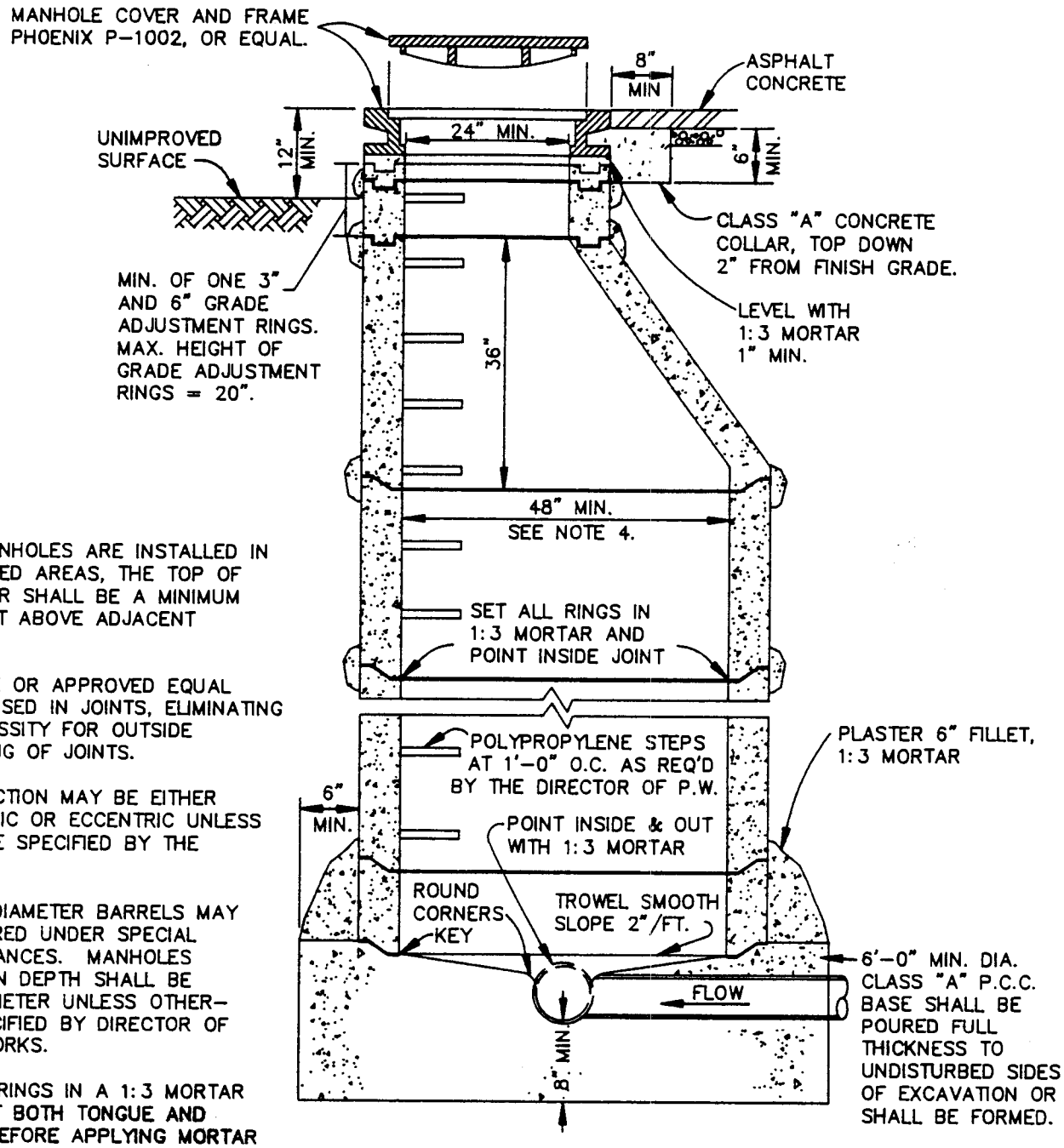

NOTES:

1. WHEN MANHOLES ARE INSTALLED IN UNIMPROVED AREAS, THE TOP OF THE COVER SHALL BE A MINIMUM OF 1 FOOT ABOVE ADJACENT GRADE.

2. RAM-NEK OR APPROVED EQUAL MAY BE USED IN JOINTS, ELIMINATING THE NECESSITY FOR OUTSIDE PLASTERING OF JOINTS.

3. CONE SECTION MAY BE EITHER CONCENTRIC OR ECCENTRIC UNLESS OTHERWISE SPECIFIED BY THE ENGINEER.

4. LARGER DIAMETER BARRELS MAY BE REQUIRED UNDER SPECIAL CIRCUMSTANCES. MANHOLES OVER 7' IN DEPTH SHALL BE 5' IN DIAMETER UNLESS OTHERWISE SPECIFIED BY DIRECTOR OF PUBLIC WORKS.

5. SET ALL RINGS IN A 1:3 MORTAR BED. WET BOTH TONGUE AND GROOVE BEFORE APPLYING MORTAR AND SETTING RING. WIPE INSIDE OF JOINTS SMOOTH AND PLASTER OUTSIDE OF JOINT WITH 1/2" LAYER OF MORTAR.

6. CONSTRUCT ALL FLOW CHANNELS OF PIPE WHEREVER POSSIBLE. AFTER BASE IS POURED, BREAK OUT TOP HALF OF PIPE FLUSH WITH INSIDE FACE OF M.H. WALL AND CONSTRUCT U-SHAPED CHANNEL. MAKE ELEVATION CHANGES GRADUALLY AND DIRECTIONAL CHANGES WITH SMOOTH CURVES. SET RING BASE IN MORTAR.

SCALE: NONE	CITY OF ST. HELENA	DATE: NOV. 1993
DRAWN: DRH	STANDARD PRECAST	STD. NO.
CHK:	STORM DRAIN MANHOLE	502
APPVD:		

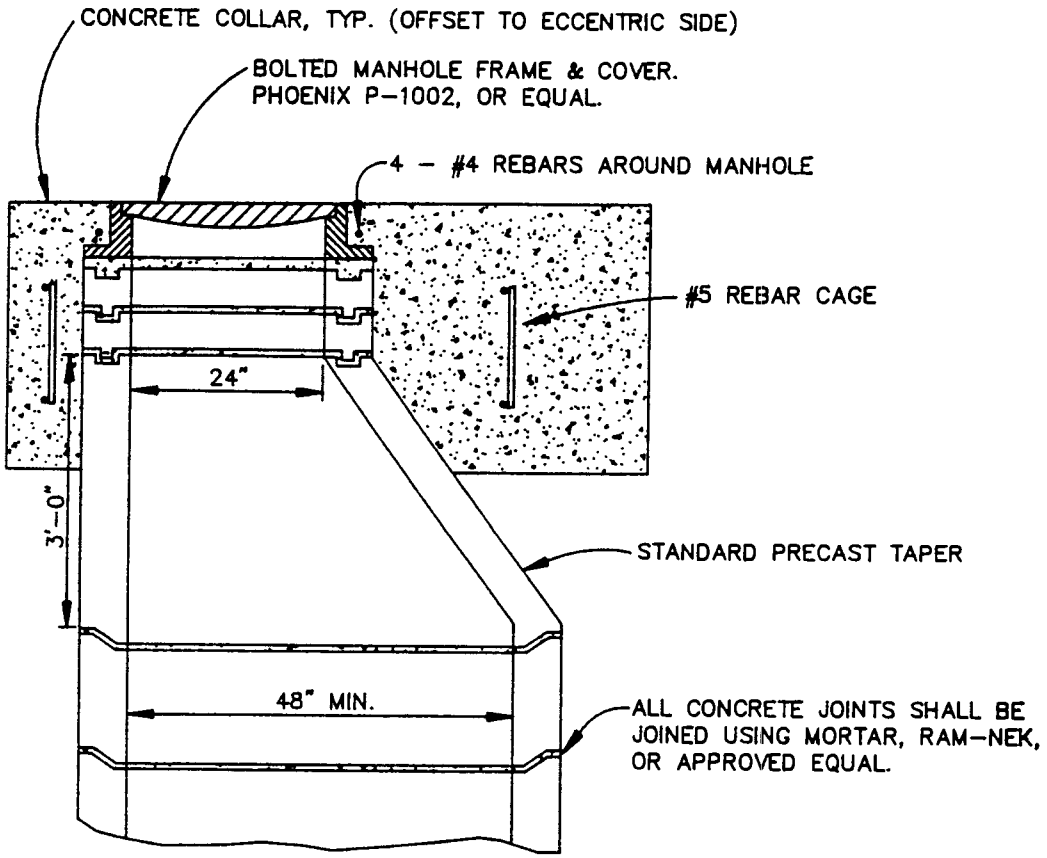

NOTES:

1. COLLAR MUST EXTEND TO TOP OF MANHOLE FRAME AND OVER BOTTOM FLANGE OF FRAME.
2. PLACE 4 - #4 BARS X 4 FT. LONG AROUND MANHOLE IN CROSS PATTERN.
3. MINIMUM COLLAR SIZE SHALL BE .05 CUBIC YARDS.
4. THE TABLE SHOWS MINIMUM REQUIREMENTS FOR CONCRETE COLLARS. THE ENGINEER SHALL SUBMIT DESIGN CALCULATIONS FOR THE CONCRETE COLLAR AND REBAR FOR EACH SPECIFIC CONDITION, FOR APPROVAL BY CITY.

TABLE

OUTSIDE COLLAR DIMENSIONS, FT.	CONCRETE COLLAR, DEPTH, FT.	APPROXIMATE VOLUME, CU.YD.
4X4	1.5	0.5 MIN.
4X5	2.0	1.00
4X5	3.0	1.25
4X5.5	3.5	1.33
4X6	3.0	1.50
4X6.5	3.0	2.00
5X6	3.0	2.25
5X6.5	3.0	2.50
5X6.5	3.5	2.75
5X7	3.5	3.00
5X7	4.0	3.25
5.5X6.5	4.0	3.50
5.5X7	4.0	4.00
6X7	3.5	3.75
6.5X7	3.75	4.50
6.5X7	4.0	5.00

SCALE: NONE	CITY OF ST. HELENA	DATE: NOV. 1955
DRAWN: DRH	STORM DRAIN PRESSURE	STD. NO.
CHK:	MANHOLES - CONCRETE COLLARS	503
APPVD:		

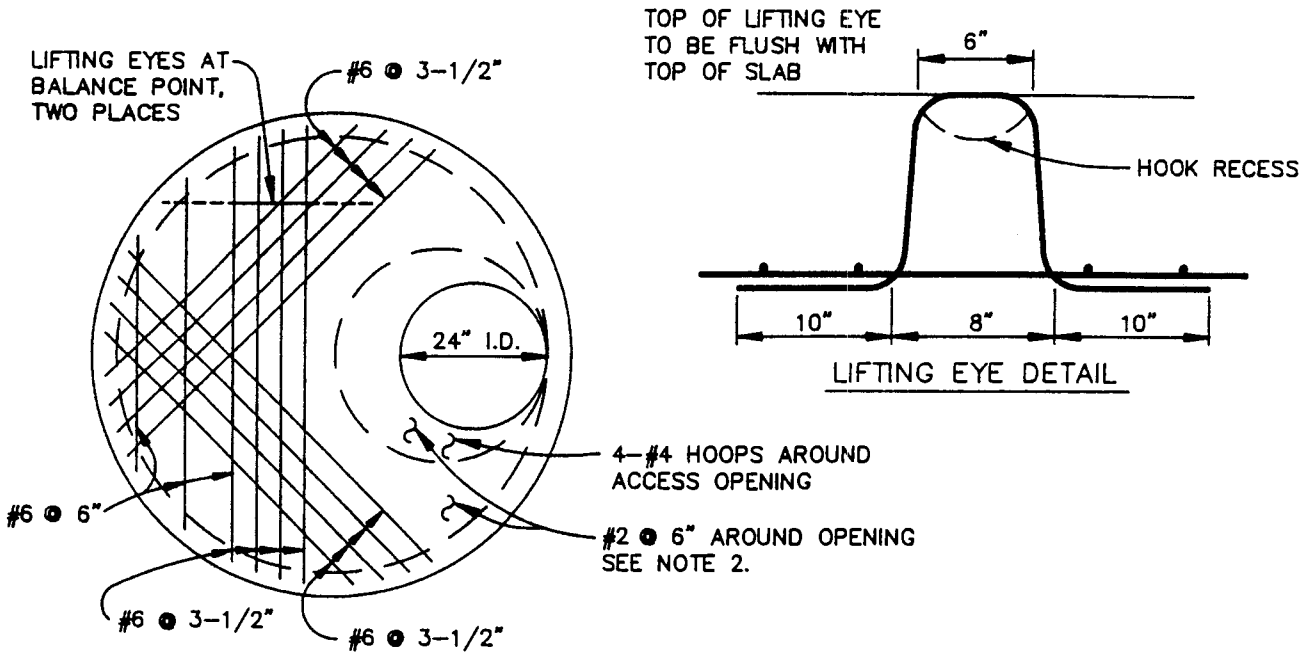

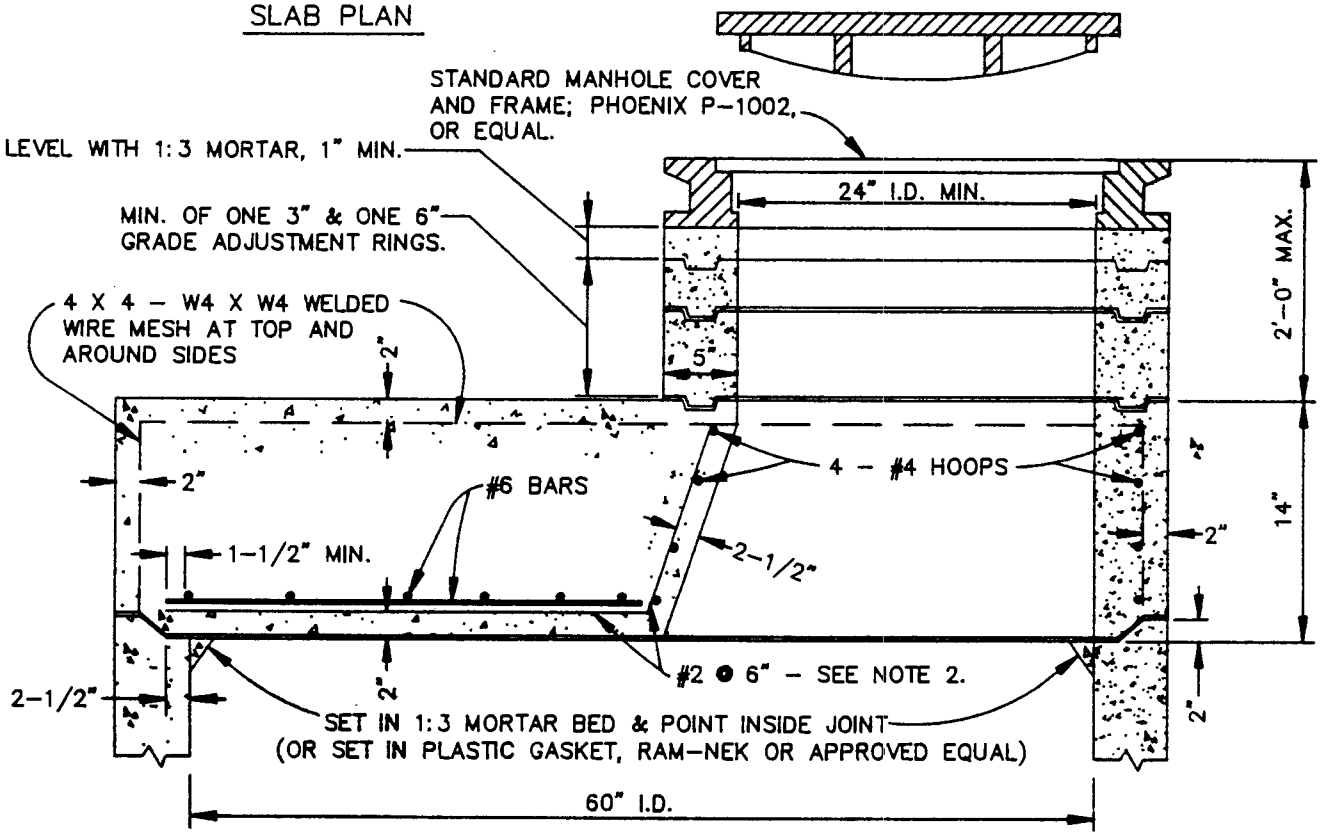

NOTES:

1. FOR DETAILS AND SPECIFICATIONS OF BASE AND BARREL SECTIONS, SEE CITY STDS. 502 OR 503
2. #2 BARS BENT UP AND SPACED 6" O.C. AROUND 24" OPENING. HORIZONTAL LEGS TO FAN OUT EQUALLY SPACED, TO 2-1/2" CLEAR AT EDGE OF SLAB.

SCALE: NONE	CITY OF ST. HELENA	DATE: NOV. 1993
DRAWN: DRH	STANDARD PRECAST CONCRETE STORM DRAIN MANHOLE REDUCER SLAB	STD. NO.
CHK:		504
APPVD:		

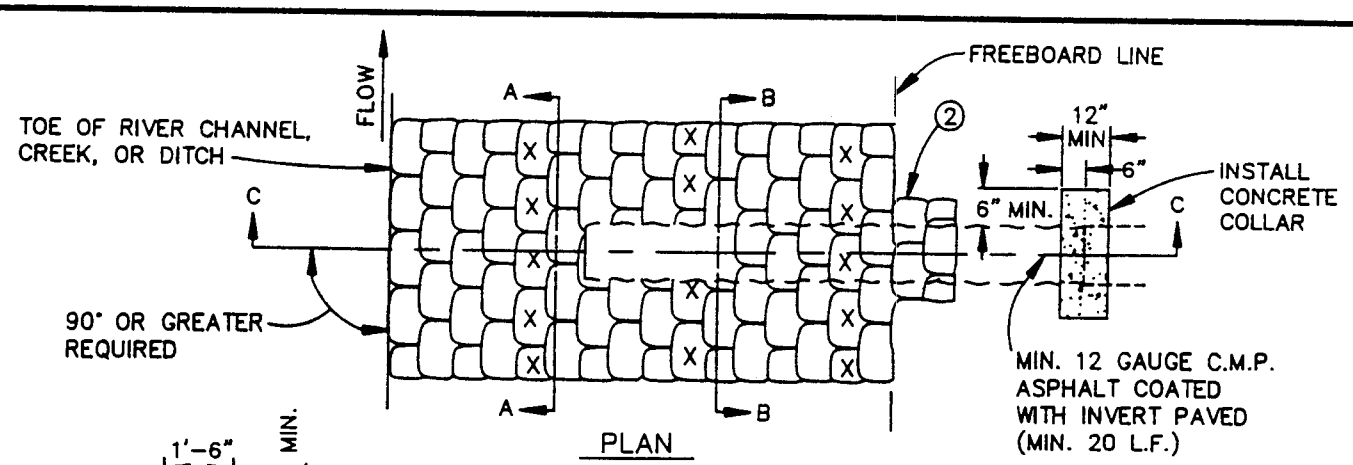

PLAN

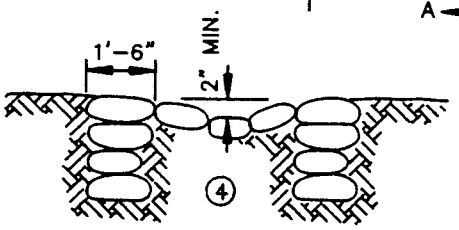

SECTION A-A

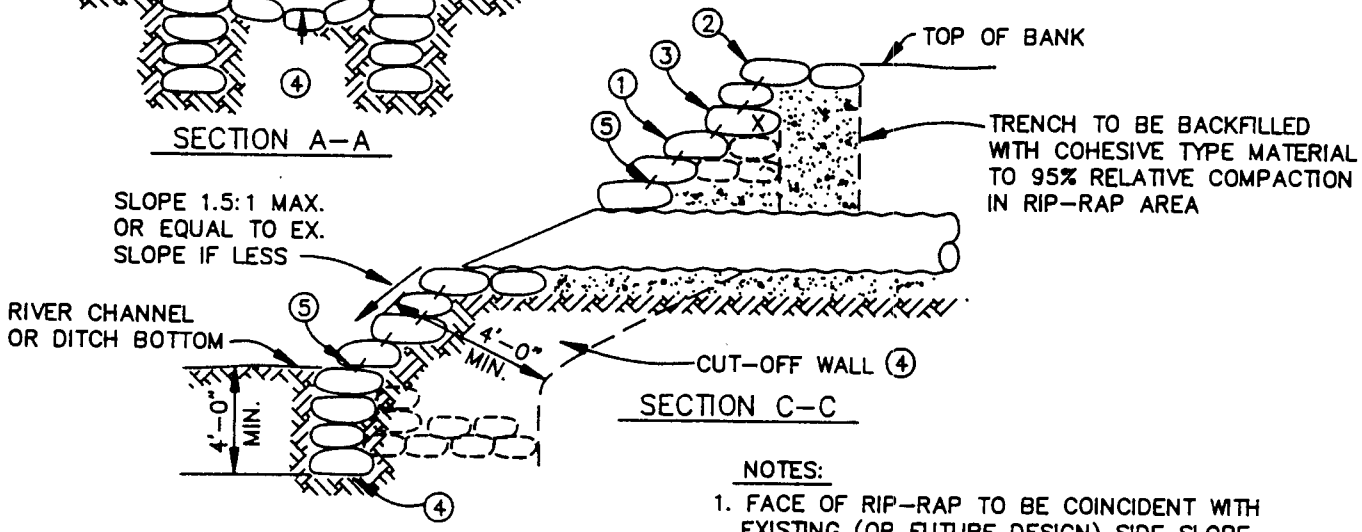

SECTION C-C

NOTES:

1. FACE OF RIP-RAP TO BE COINCIDENT WITH EXISTING (OR FUTURE DESIGN) SIDE SLOPE OF CHANNEL.
2. CARRY RIP-RAP TO TOP OF BANK IN TRENCH EXCAVATION ABOVE FREEBOARD.
3. SACK CONCRETE RIP-RAP PLACED ON UNDISTURBED SOIL. ANY OVER EXCAVATION MUST BE FILLED WITH SACKS, NO EARTH BACKFILL WILL BE PERMITTED. (EVERY FIFTH COURSE TO BE A HEADER COURSE. ⊗)
4. INSTALL CUT-OFF WALL UPSTREAM & DOWNSTREAM TO AN ELEVATION WHICH IS EQUAL TO THE FREEBOARD ELEVATION OR TOP OF PIPE, WHICH EVER IS HIGHER, & ACROSS THE BOTTOM WITH 4.0 MINIMUM DEPTH.
5. IN ALL TOP COURSES AND THROUGHOUT, IF SIDE SLOPE IS STEEPER THAN 1:1 AND/OR HIGHER THAN 10 FEET, DRIVE ONE #4 REINFORCING BAR 18" LONG THROUGH EACH SACK. DO NOT LEAVE ENDS OF BARS EXPOSED, NOR DRIVE INTO DIRT.
6. BROKEN CONCRETE MAY BE SUBSTITUTED WHEN INSTALLED IN A WORKMANSHIP LIKE MANNER AND MORTARED TOGETHER WITH A 4 SACK CONC. MIX.
7. OUTFALLS TO BE APPROVED BY FISH AND GAME AND FLOOD CONTROL AS APPROPRIATE.

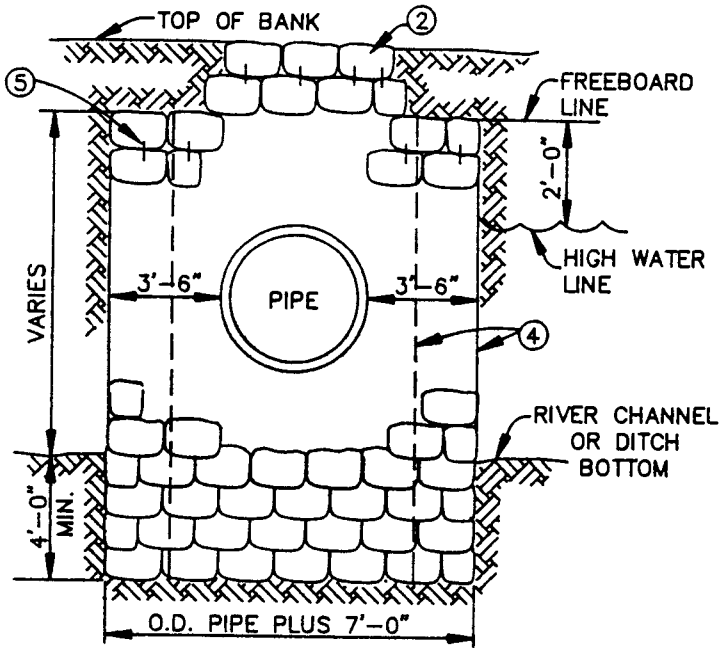

VIEW B-B

SCALE: NONE	CITY OF ST. HELENA	DATE: NOV. 1995
DRAWN: DRH	TYPICAL STORM DRAIN OUTFALL DETAIL	STD. NO.
CHK:		505
APPVD:		

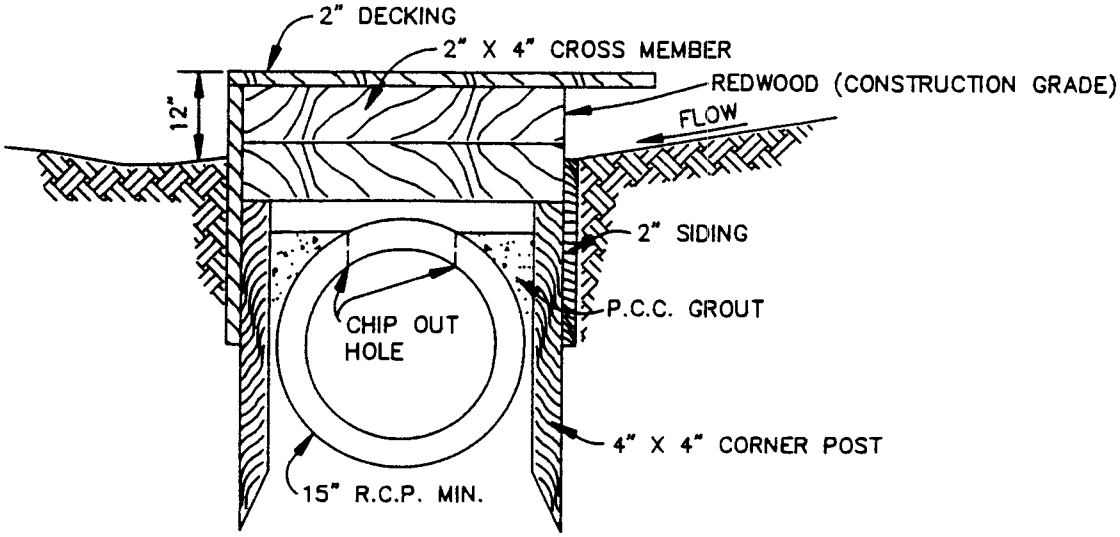

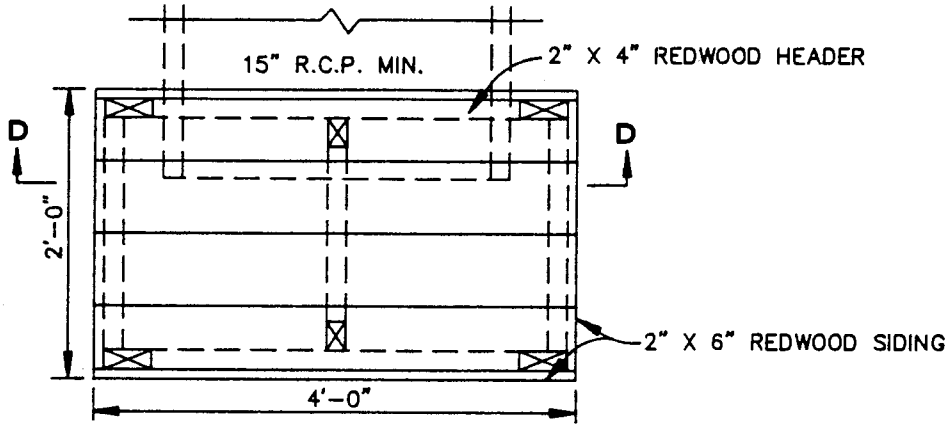

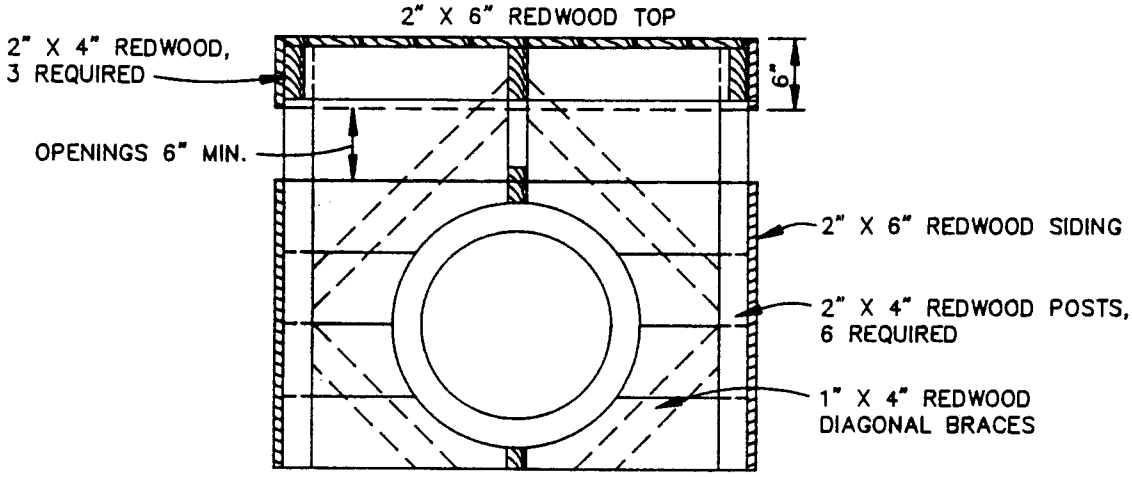

SECTION D–D

SCALE: NONE	CITY OF ST. HELENA	DATE: NOV. 1993
DRAWN: DRH	REDWOOD BOX FIELD DRAIN	STD. NO. 506
CHK:		
APPVD:		

STREET SLOPES LESS THAN 2-1/2%

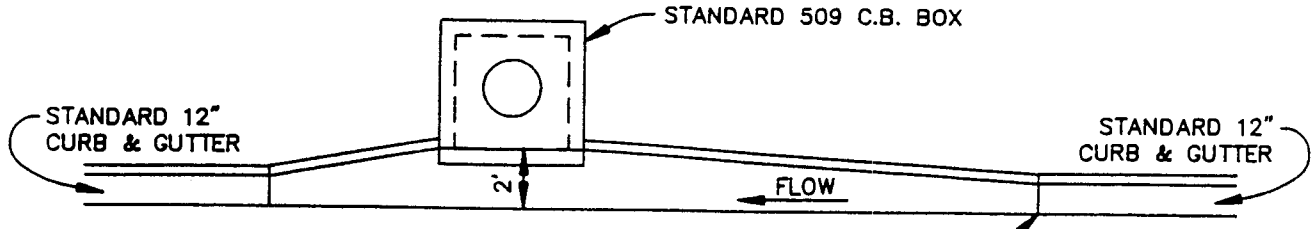

OFFSET 509 C.B. APRON

EXPANSION JOINT BOTH SIDES (TYP.)

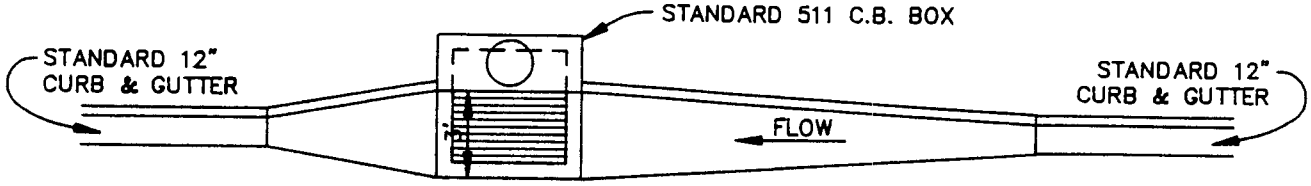

OFFSET 511 C.B. APRON

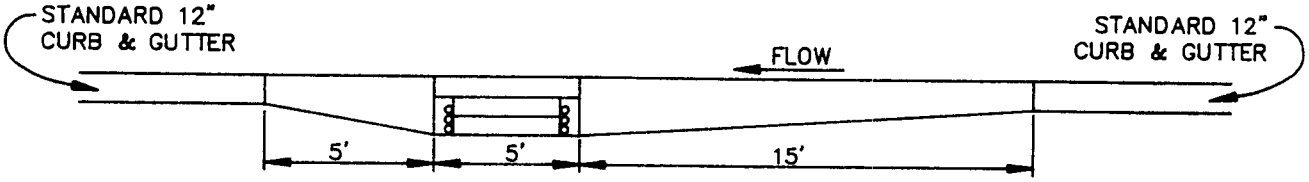

TYPICAL PROFILE – OFFSET 509 & 511 C.B.

STREET SLOPES 2-1/2% OR MORE

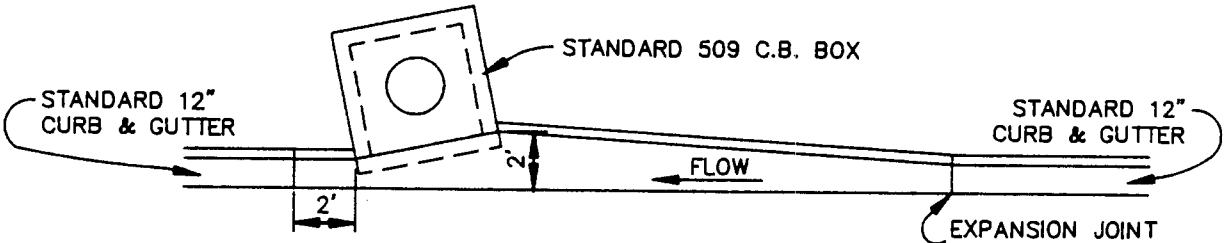

ANGLED 509 C.B. APRON

EXPANSION JOINT BOTH SIDES (TYP.)

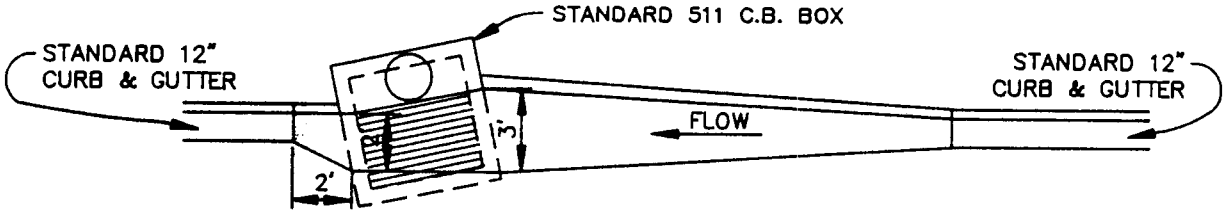

ANGLED 511 C.B. APRON

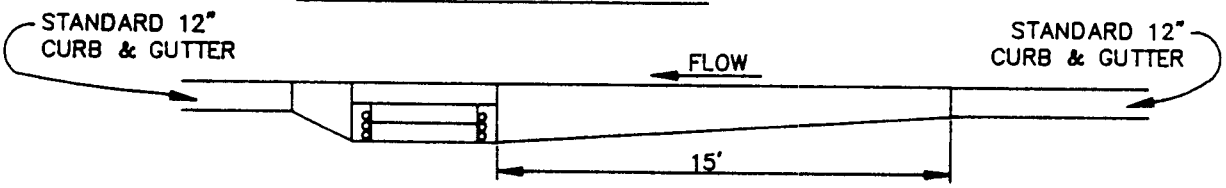

TYPICAL PROFILE – ANGLED 509 & 511 C.B.

SCALE: NONE	**CITY OF ST. HELENA**	DATE: NOV. 1995
DRAWN: DRH	SPECIAL APRONS FOR 509 & 511 CATCH BASINS	STD. NO.
CHK:		507
APPVD:		

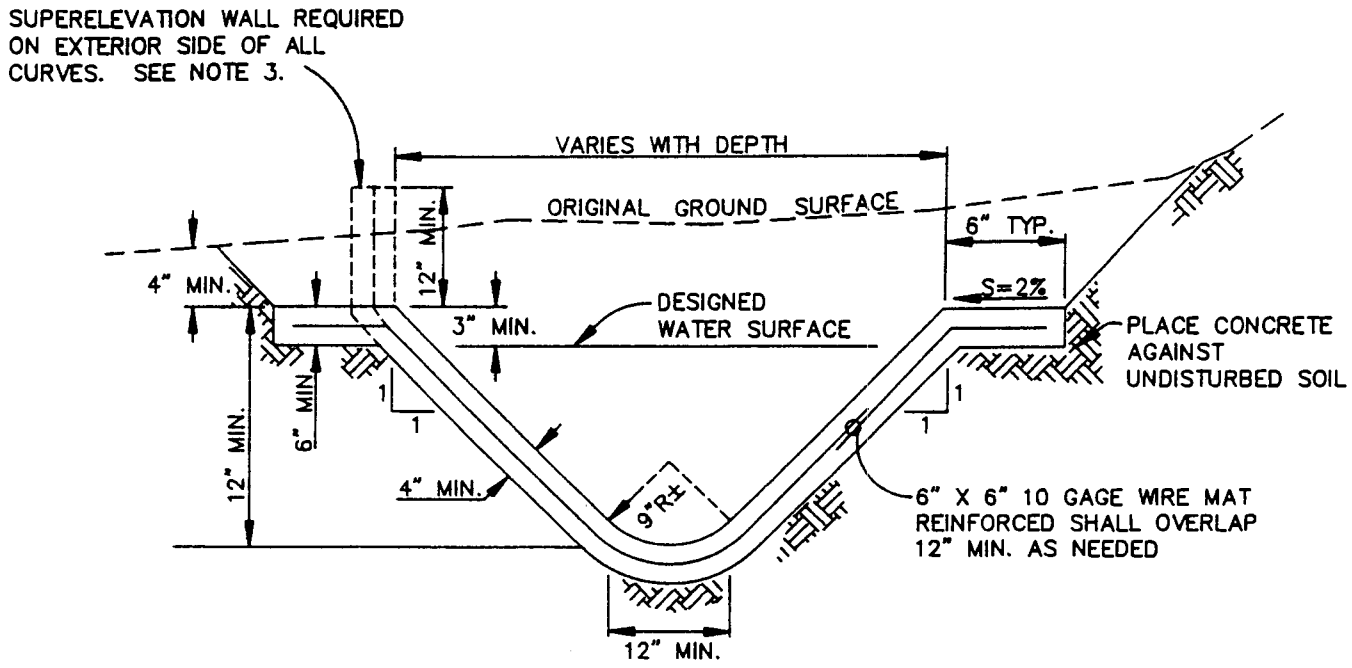

NOTES:

1. LINED DITCHES SHALL BE INDIVIDUALLY DESIGNED FOR CAPACITY AND CONTROLLED VELOCITY. CALCULATIONS AND A PROFILE SHALL BE PROVIDED BY A REGISTERED CIVIL ENGINEER, AND APPROVED BY THE CITY ENGINEER.

2. LINEAR GRADE SLOPES SHALL BE CONTINUOUS OR INCREASING IN MAGNITUDE IN THE DOWN HILL DIRECTION. THE INTERCEPTOR DITCH SHALL CONNECT TO AN UNDERGROUND STORM DRAIN SYSTEM AS DIRECTED BY THE CITY ENGINEER.

3. SUPERELEVATION WALLS SHALL BE REQUIRED ON ALL HORIZONTAL CURVES. THEY SHALL EXTEND, FULL HEIGHT, 6' BEYOND THE DOWNSTREAM END OF THE CURVE AND HAVE A 6' MINIMUM TAPER LENGTH AT EACH END OF THE FULL HEIGHT WALL.

4. DITCHES SHALL BE CONSTRUCTED ON ENGINEERED FILL ONLY AFTER CERTIFICATION OF PRESCRIBED COMPACTION BY A SOILS ENGINEER.

5. THE CHANNEL EXCAVATION SHALL BE INSPECTED PRIOR TO PLACEMENT OF CONCRETE.

6. CONCRETE SHALL BE A MINIMUM OF CLASS "B" 5 SACK MIX.

7. CONCRETE SHALL BE CONTINUOUS, WITHOUT EXPANSION JOINTS, AND SHALL HAVE WEAK PLANE JOINTS AT 20' CC WITH 6" X 6" 10 GAGE WIRE MAT THROUGH THE WEAK PLANE JOINT.

SCALE: NONE	CITY OF ST. HELENA	DATE: NOV. 1993
DRAWN: DRH	STANDARD CONCRETE LINED INTERCEPTOR DITCH	STD. NO.
CHK:		508
APPVD:		

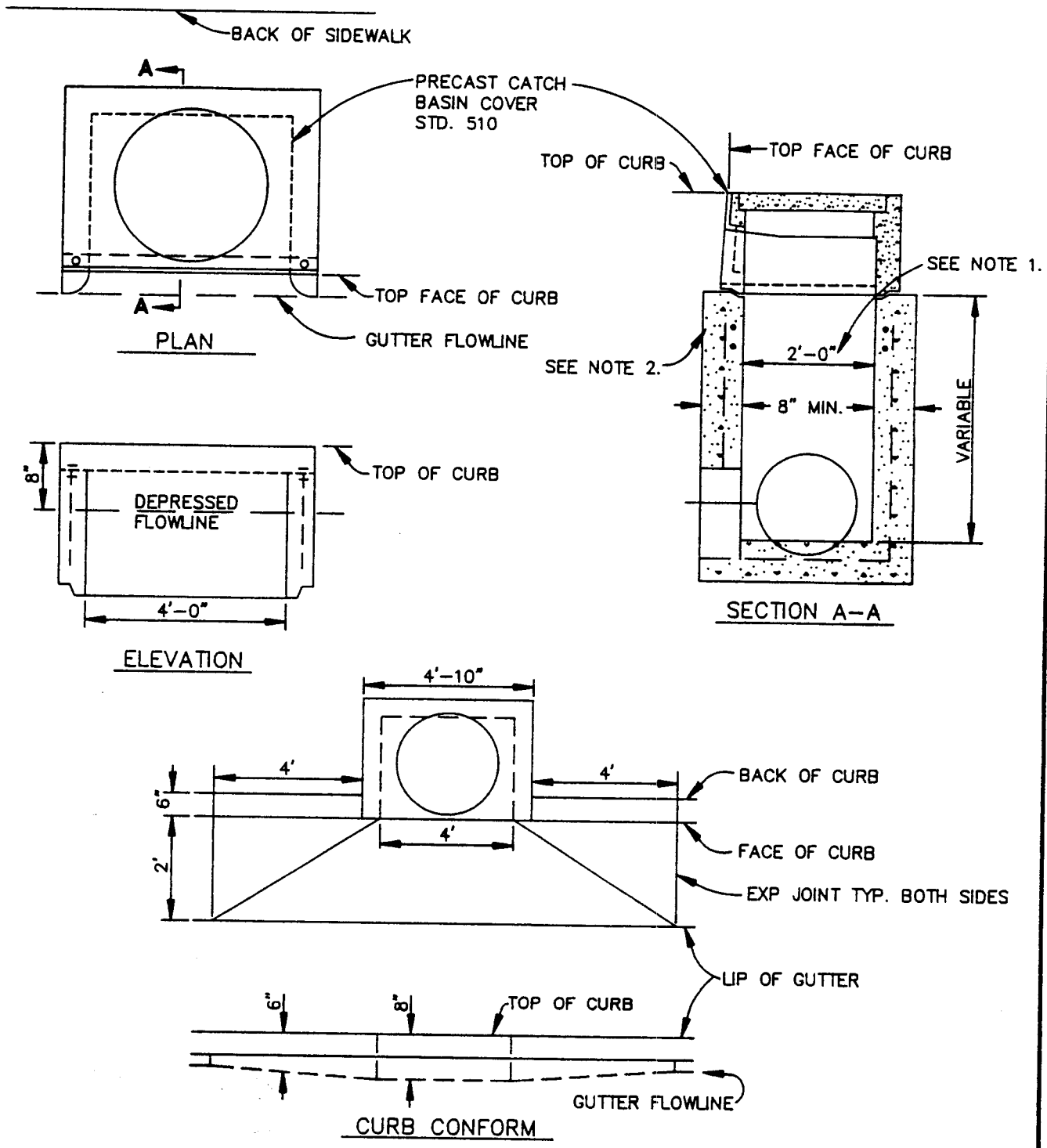

NOTES:

1. IF PIPE INTO OR OUT OF THE CATCH BASIN IS LARGER THAN 24", UNIT SHALL BE TAILOR MADE BY SUPPLIER, OR PLANS SHOWING FIELD FABRICATION SHALL BE SUBMITTED TO THE CITY ENGINEER FOR APPROVAL PRIOR TO CONSTRUCTION.
2. APPROVED ALTERNATES FOR CURB INLET BASE SECTIONS: SANTA ROSA CAST PRODUCTS BASE SECTION MODEL 4A; PHOENIX PRECAST CONC. PRODUCTS BASE SECTION MODEL D14,2
3. ALL HOOD, BASE, AND PIPE CONNECTIONS SHALL BE GROUTED.

SCALE: NONE	CITY OF ST. HELENA	DATE: NOV. 1995
DRAWN: DRH	CURB OPENING CATCH BASINS	STD. NO.
CHK:		509
APPVD:		

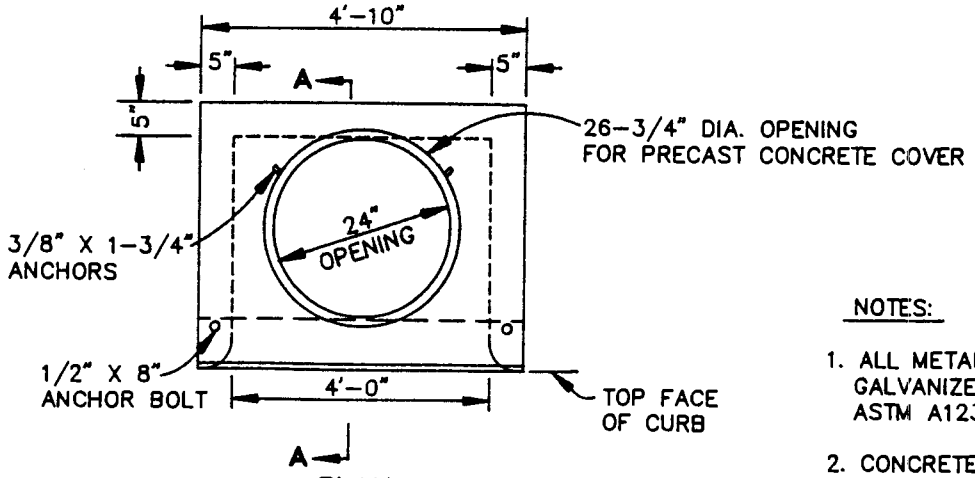

PLAN

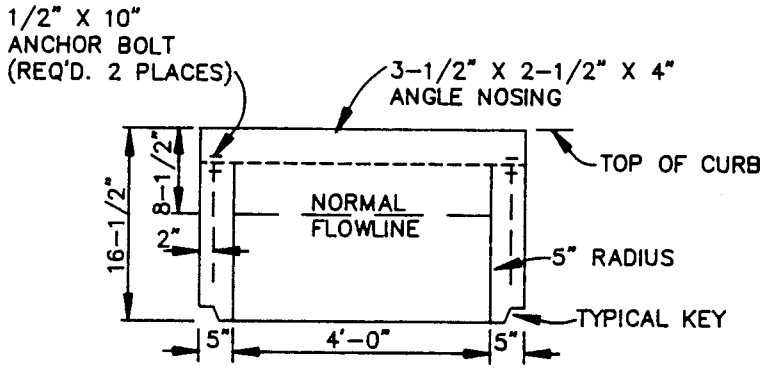

ELEVATION

NOTES:

1. ALL METAL PARTS SHALL BE HOT DIPPED GALVANIZED AFTER FABRICATION PER ASTM A123.
2. CONCRETE SHALL TEST 3000 PSI AT 28 DAYS.
3. ALL REINFORCING SHALL BE 4" X 4" – 6–6 MESH.
4. WEIGHT OF UNIT COMPLETE = 1500± LBS. COVER ONLY = 100± LBS.
5. 3/4" GALVANIZED STEEL GUARD ROD SUPPLIED IN LOCATION UPON REQUEST.
6. BASE MAY BE PRECAST OR CAST IN PLACE TO SUIT.

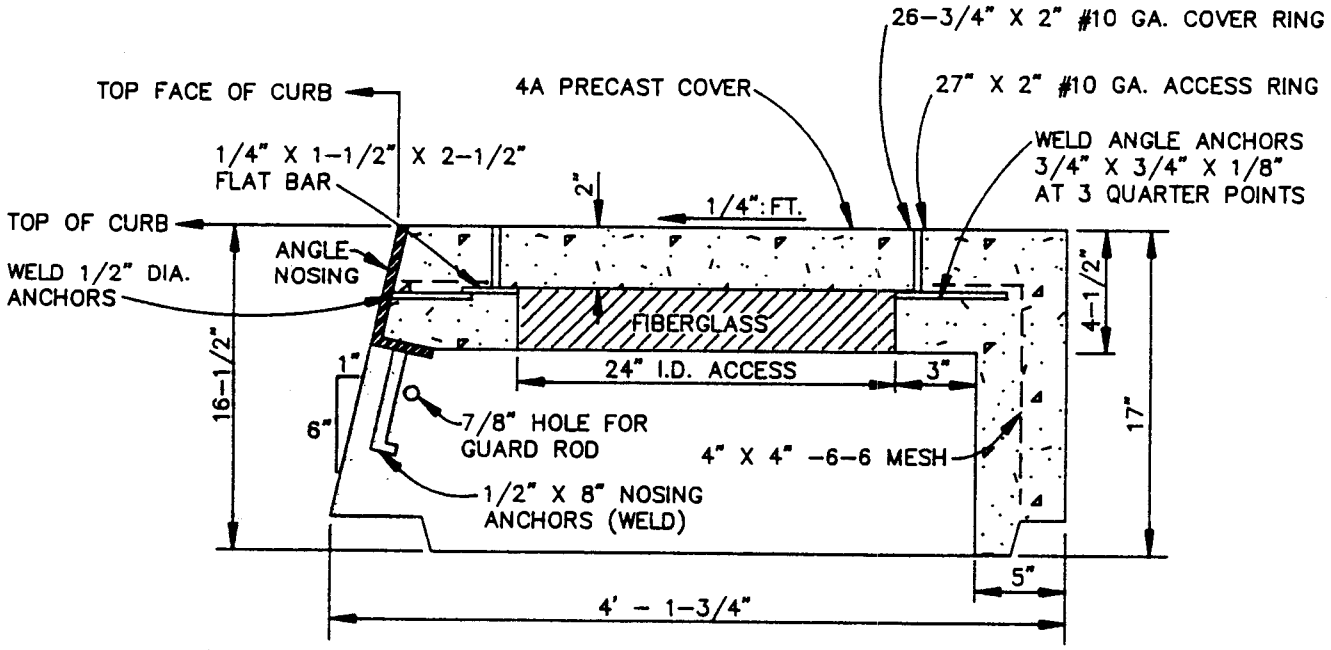

SECTION A–A

APPROVED ALTERNATES:
SANTA ROSA CAST PRODUCTS MODEL 4AC
PHEONIX PRECAST CONC. PRODUCTS MODEL P-2448-C

SCALE: NONE	CITY OF ST. HELENA	DATE: NOV. 1993
DRAWN: DRH	PRECAST CATCH BASIN COVER	STD. NO. 510
CHK:		
APPVD:		

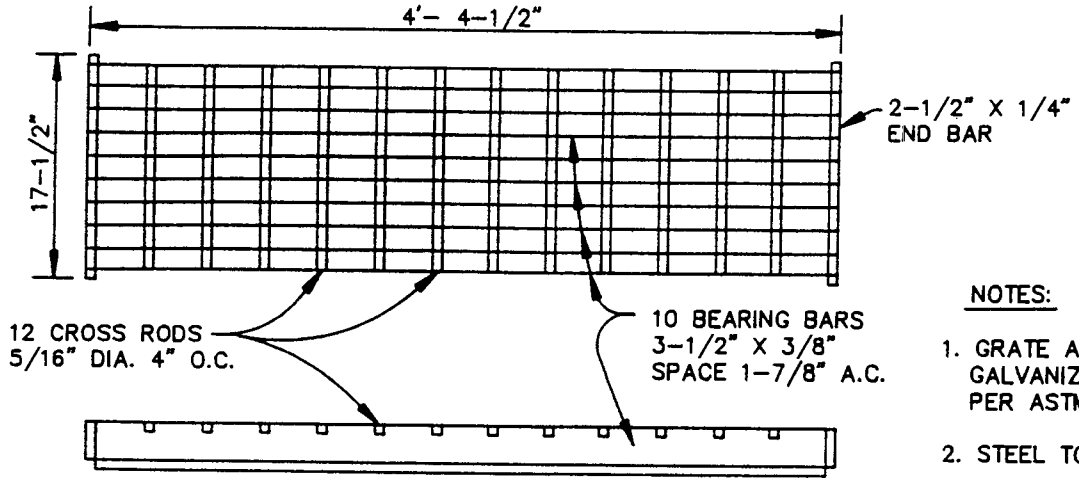

GRATE DETAIL

NOTES:

1. GRATE AND FRAME HOT DIPPED GALVANIZED AFTER FABRICATION PER ASTM A123.
2. STEEL TO BE A36.
3. FRAME TO BE INSTALLED TIGHT AGAINST PRECAST CURB INLET.

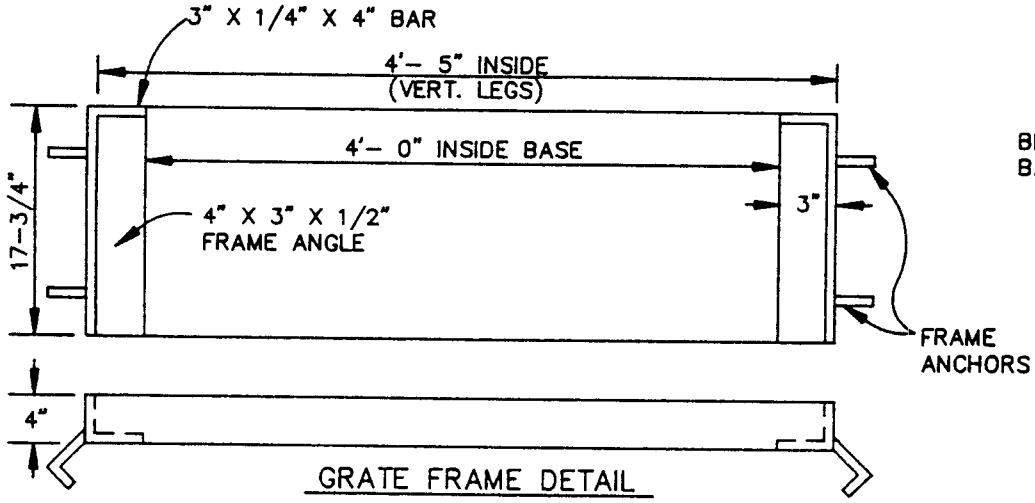

GRATE FRAME DETAIL

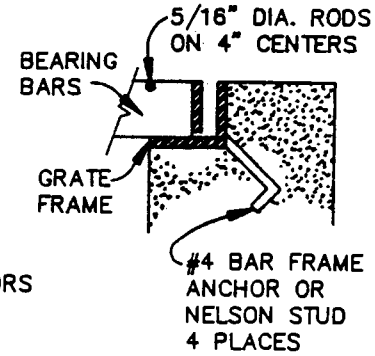

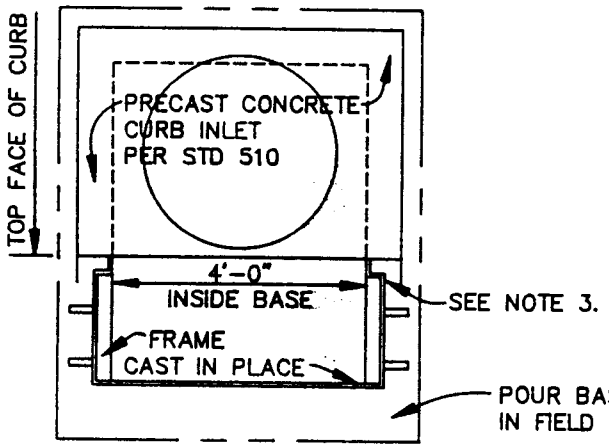

PLAN

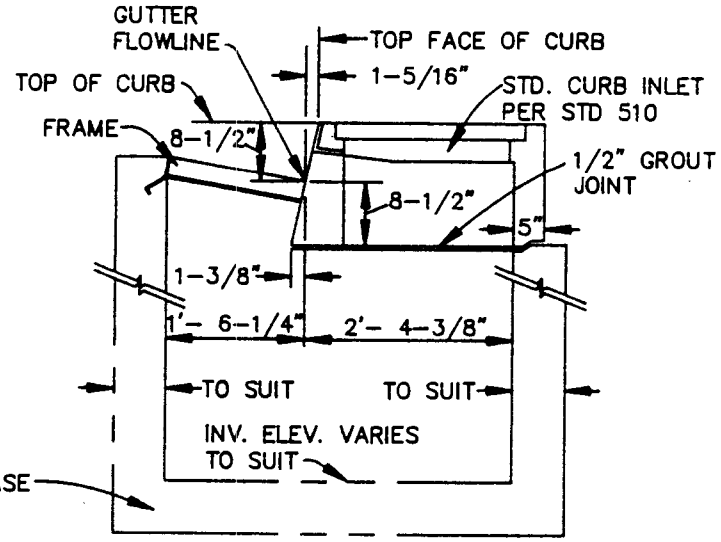

SECTION

TYPICAL INSTALLATION DETAILS

SCALE: NONE	CITY OF ST. HELENA	DATE: NOV. 1995
DRAWN: DRH	CONBINATION CURB OPENING/ GRATE CATCH BASINS	STD. NO.
CHK:		511
APPVD:		

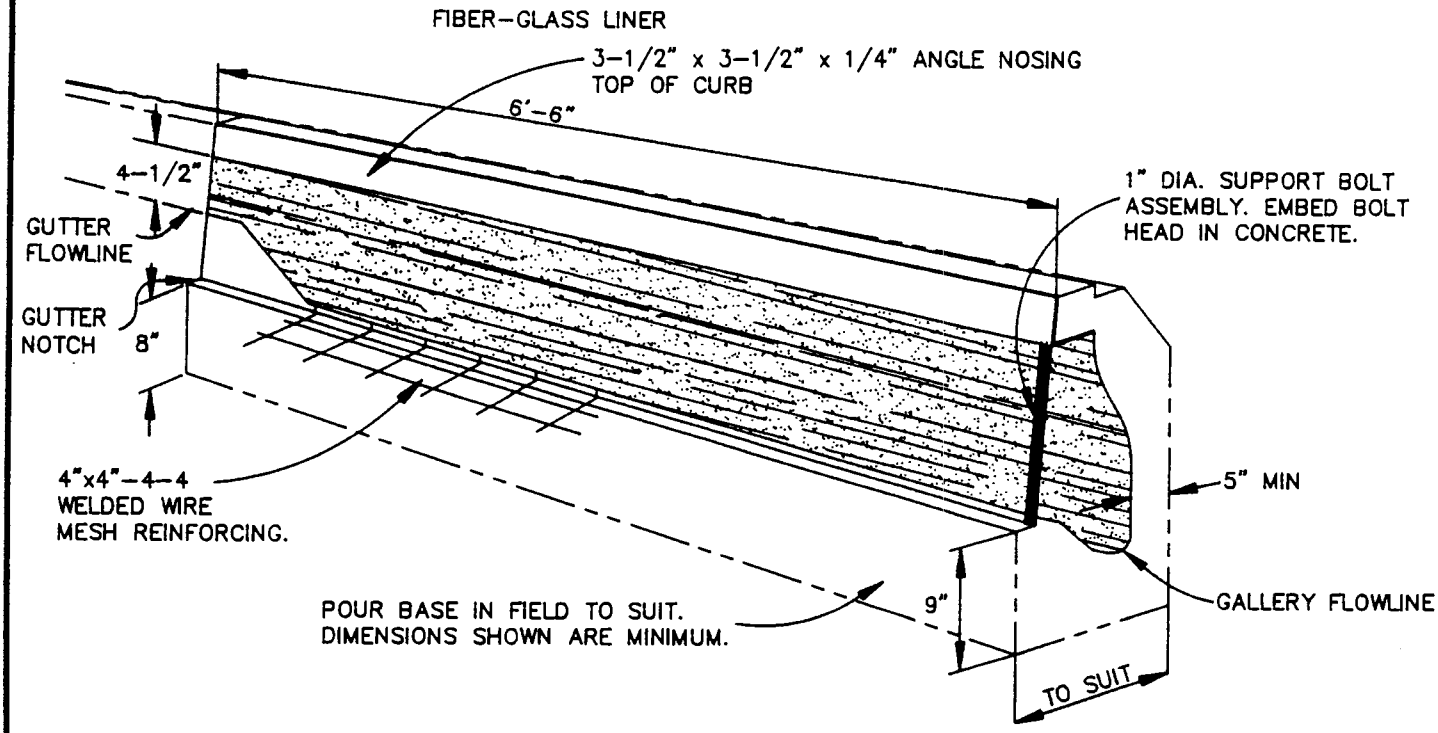

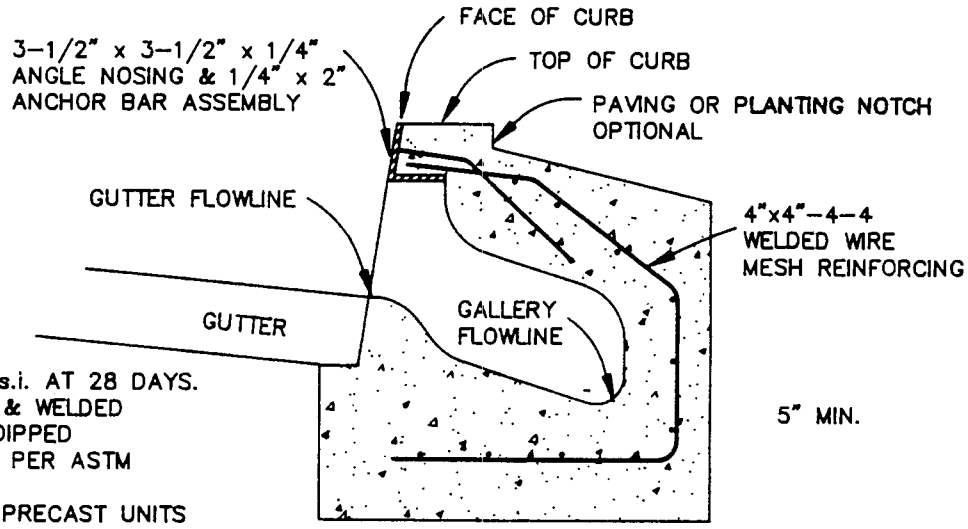

NOTES:
1. CONCRETE SHALL BE 3000p.s.i. AT 28 DAYS.
2. NOSING ASSEMBLY (ANGLED & WELDED ANCHOR BARS) SHALL BE HOT DIPPED GALVANIZED AFTER FABRICATION PER ASTM SPEC. A123-59.
3. EITHER CAST-IN-PLACE OR PRECAST UNITS ARE ACCEPTABLE.

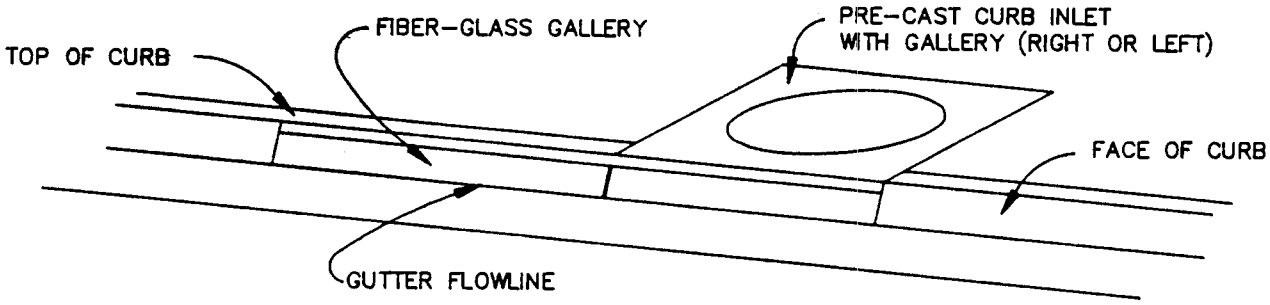

SCALE: NONE	CITY OF ST. HELENA	DATE: NOV. 1993
DRAWN: DRH	STORM DRAIN GALLERY	STD. NO.
CHK:		512
APPVD:		

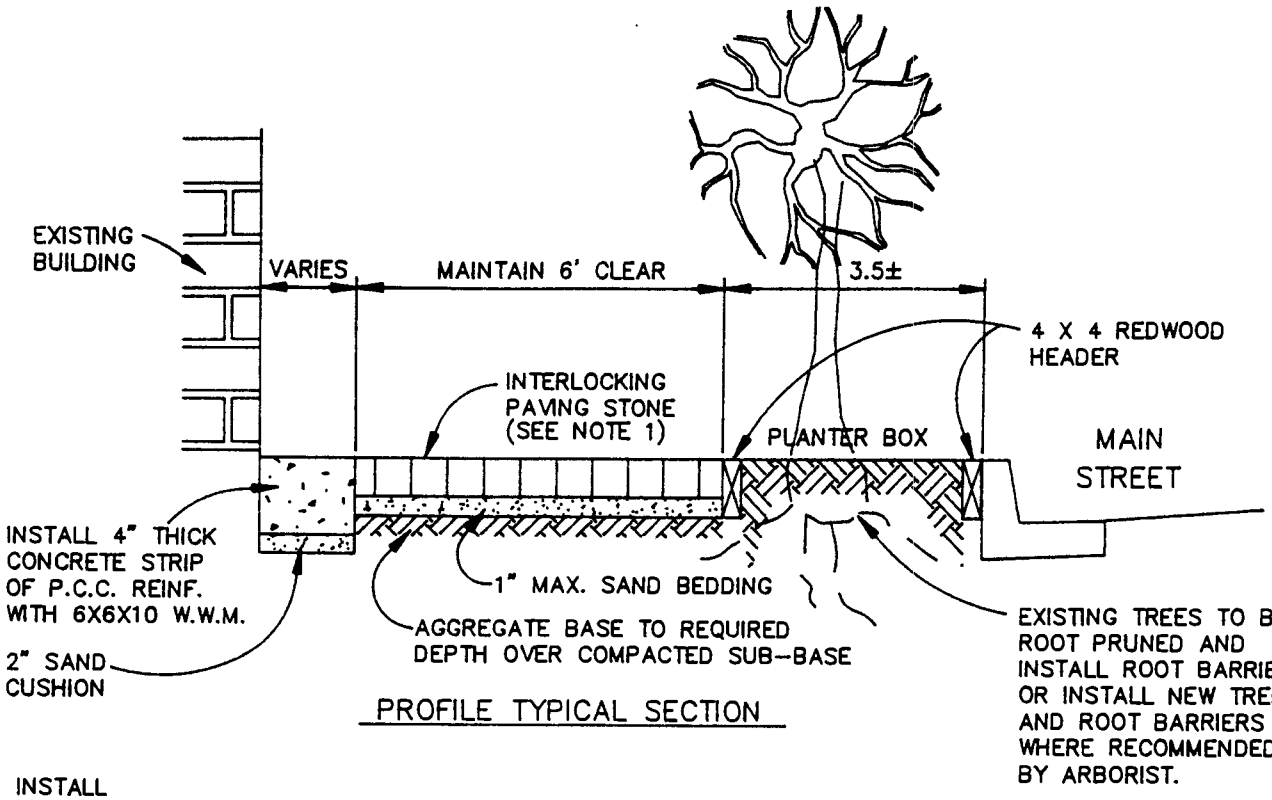

PROFILE TYPICAL SECTION

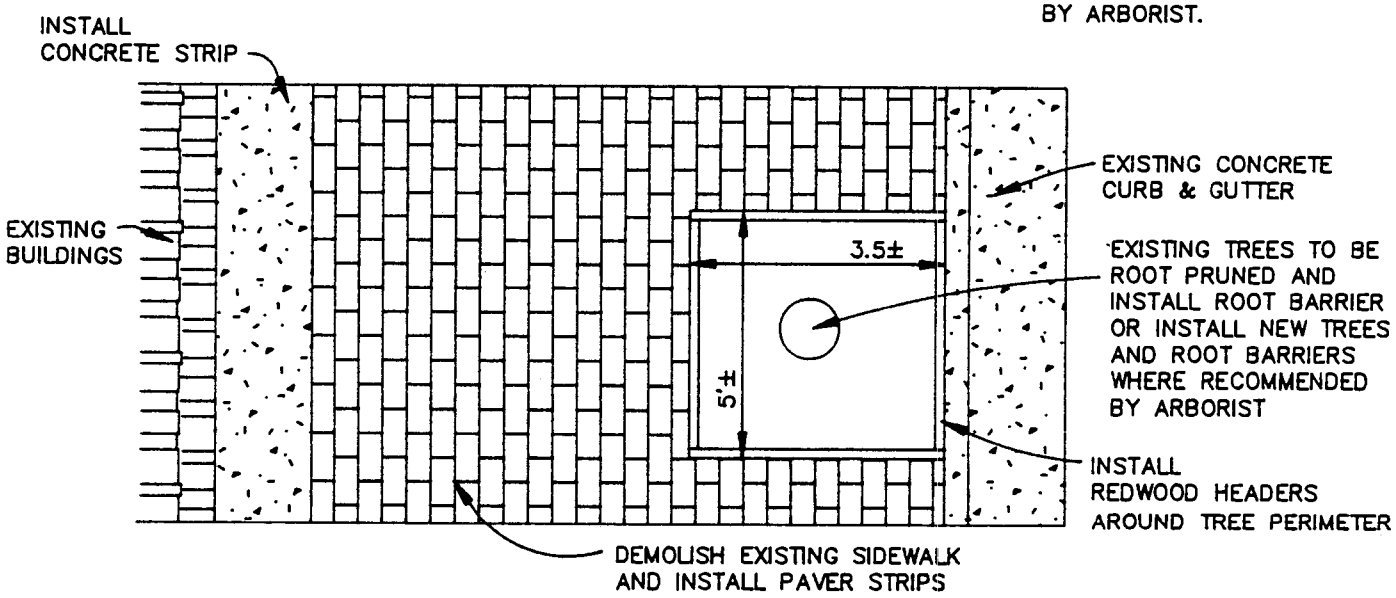

PLAN VIEW TYPICAL SECTION

NOTES:

1. INTERLOCKING PAVING STONES SHALL CONFORM TO MULLER "FINETTA" OR EQUIVALENT WITH COLORING TO BE TAN/BROWN.
2. WHEN NEW CONCRETE IS PLACED ADJACENT TO PAVING STONES, THE RELIEF ON THE CONCRETE EDGE SHALL BE AS SMALL AS POSSIBLE (1/4 INCH) TO ALLOW CLOSE FIT.
3. ALL CONCRETE TO BE CLASS A P.C.C.
3. SEWER LATERALS REPAIRED & CLEANOUTS INSTALLED PER CITY STDS 212,213

REVISED: MARCH 1994

SCALE: NONE	**CITY OF ST. HELENA**	DATE: NOV. 1993
DRAWN: DRH	DOWNTOWN PAVING STONE SIDEWALK	STD. NO.
CHK:		600A
APPVD:		

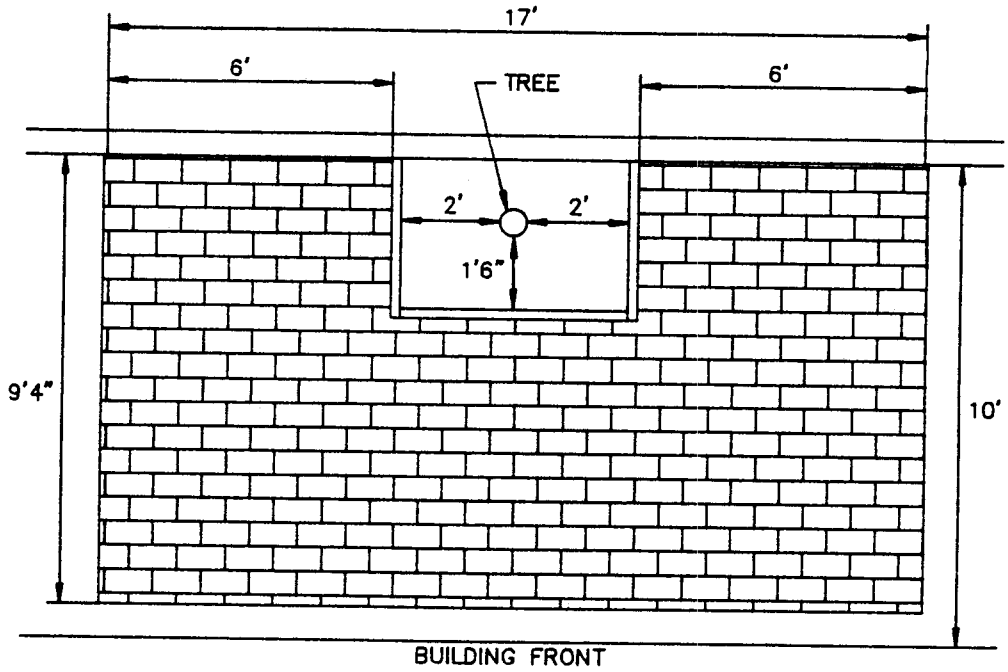

SQUARE OF PAVERS

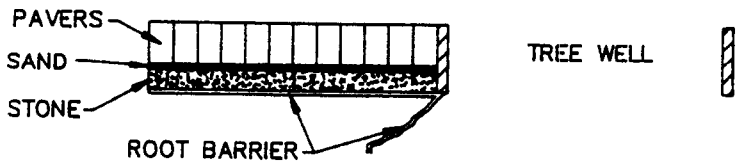

TREE WELL & PAVERS, SIDE VIEW

REVISED: MARCH 19[illegible]

SCALE: NONE	CITY OF ST. HELENA	DATE: NOV. 1993
DRAWN: DRH	DOWNTOWN PAVING STONE SIDEWALK	STD. NO.
CHK:		600B
APPVD:		

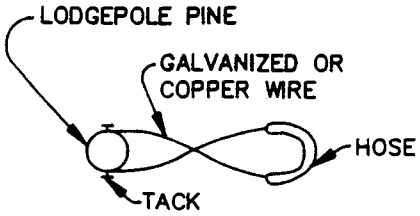

TREE TIE DETAIL

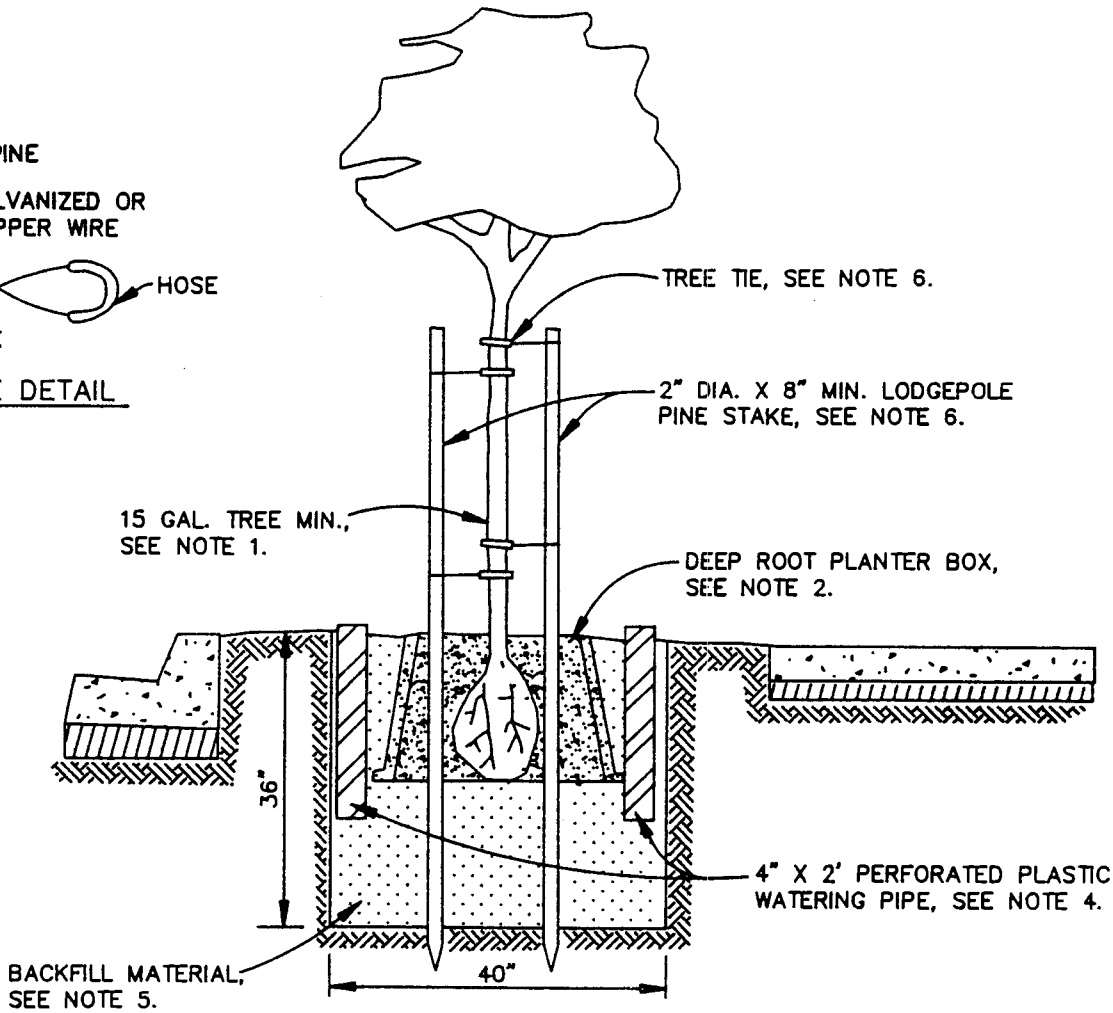

PLANTING DETAIL

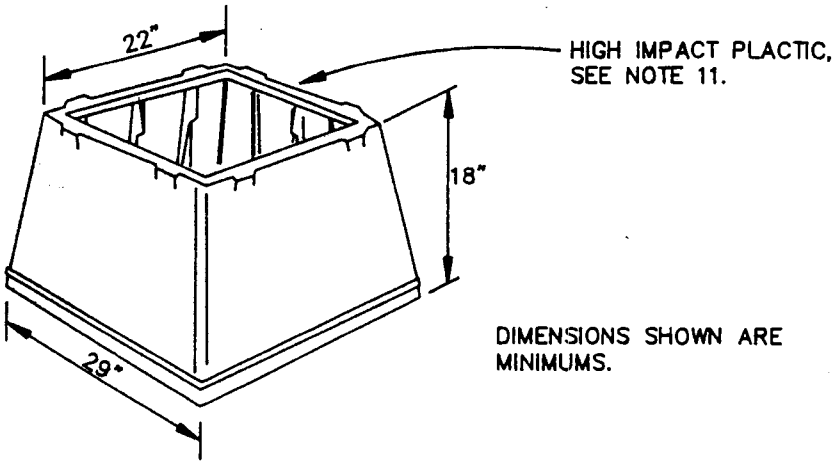

DEEP ROOT PLANTER

SCALE: NONE	**CITY OF ST. HELENA**	DATE: NOV. 1993
DRAWN: DRH	STREET TREE PLANTING SPECIFICATIONS	STD. NO.
CHK:		701
APPVD:		

GENERAL NOTES

1. TREES SHALL BE OF A SIZE NOT LESS THAN 8 FT. IN HEIGHT NOR LESS THAN 1 INCH CALIPER. A TREE MAY BE REJECTED IT IS NOT OF A SHAPE OR CONDITION ACCEPTABLE TO THE CITY OF ST HELENA.

2. THE TREE SHALL BE PLANTED IN DEEP ROOT PLANTER BOX. THE PLANTER BOX MUST BE A MINIMUM OF 22 INCHES AT THE TOP, 29 INCHES AT THE BOTTOM AND 18 INCHES DEEP.

3. THE TREE SHALL BE PLANTED IN A HOLE 40 INCHES SQUARE BY 36 INCHES DEEP.

4. INSTALL TWO DEEP WATERING PERFORATED PLASTIC PIPES AS SHOWN. FILL PIPES 3/4 INCH CLEAN DRAIN ROCK.

5. TREES SHALL BE PLANTED IN A MIXTURE OF 1/2 NATIVE SOIL AND 1/2 LEAF MOLD OR REDWOOD MULCH.

6. TREES SHALL BE STAKED WITH TWO 2 INCH BY 8 FT. MINIMUM LODGE POLE PINE STAKES OR EQUAL. STAKES SHALL BE COATED WITH GREEN PRESERVATIVE STAIN. TREES SHALL BE TIED WITH "GRO STRAIT" TREE TIES, OR SIMILAR.

7. TREES SHALL BE PLANTED A MINIMUM OF 20 FT. APART TO A MAXIMUM OF 50 FT. APART DEPENDING ON THE TYPE OF THE TREE. TREES SHALL BE PLANTED A MINIMUM OF 20 FT. FROM CURB RETURNS, 15 FT. FROM STREET LIGHTS AND 6 FT. FROM DRIVEWAYS, SEWER LATERALS AND WATER SERVICES OR AS DIRECTED BY THE CITY OF ST. HELENA.

8. WHEN THE AREA BETWEEN THE CURB AND THE SIDEWALK IF FILLED WITH CONCRETE, AN OPENING 40 INCHES SQUARE SHALL BE MAINTAINED AS A MINIMUM.

9. THE TYPE OF TREE DESIGNATED FOR EACH STREET IS ON FILE AT THE PARK AND RECREATION DEPARTMENT OFFICE.

10. DEEP ROOT PLASTIC PIPE SHOULD BE FILLED WITH WATER AT LEAST 2 OR 3 TIMES A WEEK; EXTREMELY WARM WEATHER 4 OR 5 TIMES A WEEK.

11. DEEP ROOT PLANTER SHALL BE FABRICATED FROM A HIGH DENSITY AND HIGH IMPACT PLASTIC SUCH AS POLYVINYL CHLORIDE, ABS OR POLYETHYLENE AND HAVE A MINIMUM THICKNESS OF 0.06 INCH. THE PLASTIC SHALL HAVE 1/2 INCH HIGH RAISED VERTICAL RIBS ON THE INNER SURFACE SPACED NOT MORE THAN SIX (6) INCHES APART.

SCALE: NONE	**CITY OF ST. HELENA**	DATE: NOV. 1995
DRAWN: DRH	STREET TREE PLANTING SPECIFICATIONS	STD. NO. 702
CHK:		
APPVD:		

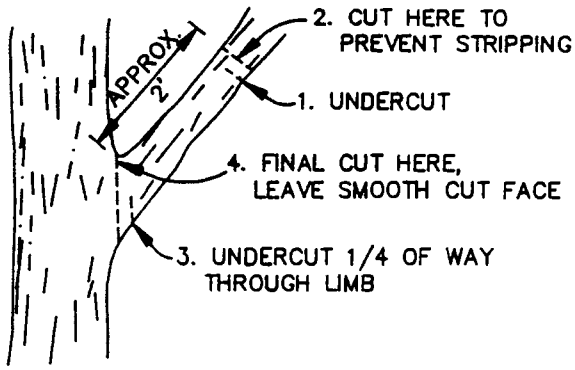

REMOVING LARGE LIMBS

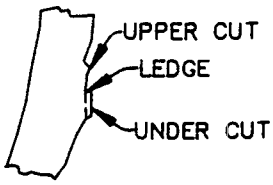

DO NOT LEAVE LEDGE CUTS. CUT ON DOTTED LINE TO MAKE A CLEAN UNION BETWEEN UPPER AND UNDER CUTS.

LEDGE CUTS

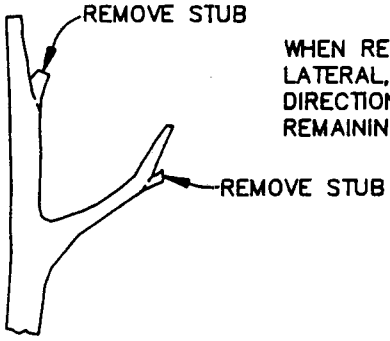

WHEN REMOVING TO LEADER OR LATERAL, CUT TO FOLLOW DIRECTION OF GROWTH OF REMAINING PORTION OF TREE.

STUBS

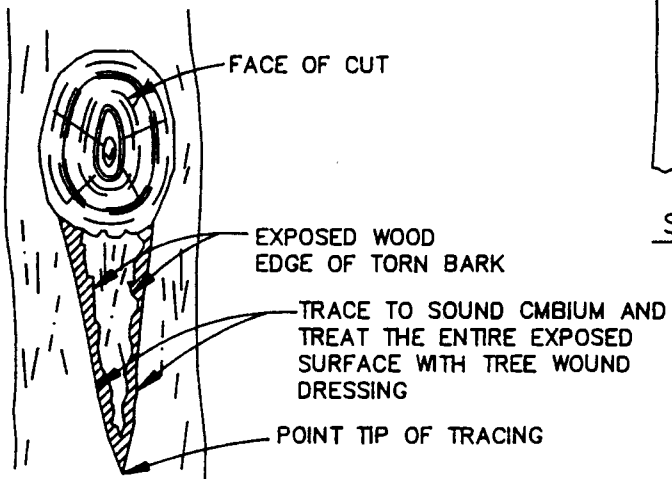

TREATMENT OF STRIPPED BARK

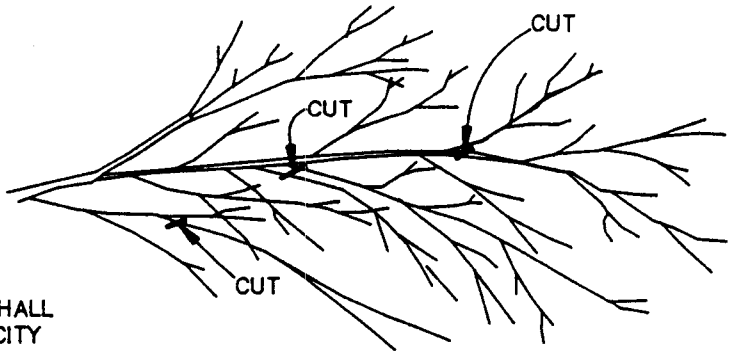

REMOVE UNDER LIMBS TO LIGHTEN HEAVY BRANCHES

NOTES:

1. LIMBS LARGER THAN TWO (2) INCH DIAMETER SHALL BE REMOVED UNDER THE SUPERVISION OF THE CITY TREE TRIMMER.
2. ALL CUTS TO BE TREATED WITH TREE SEAL.

SCALE: NONE	CITY OF ST. HELENA	DATE: NOV. 1993
DRAWN: DRH	METHODS TO BE USED IN TREE TRIMMING	STD. NO.
CHK:		703
APPVD:		

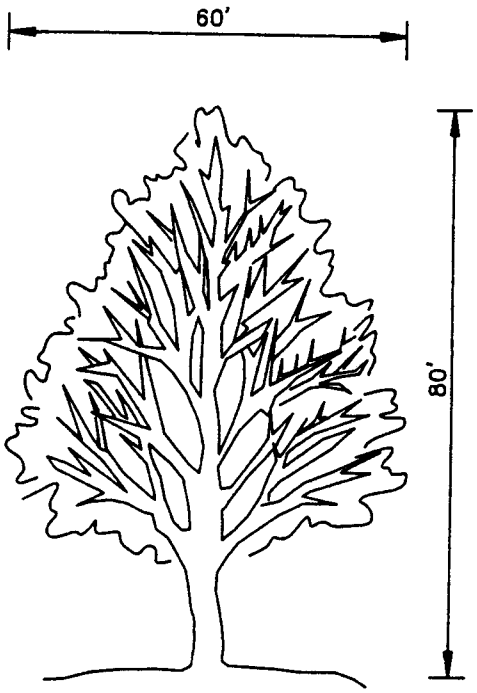

TYPICAL SHAPE OF
EXISTING TREE

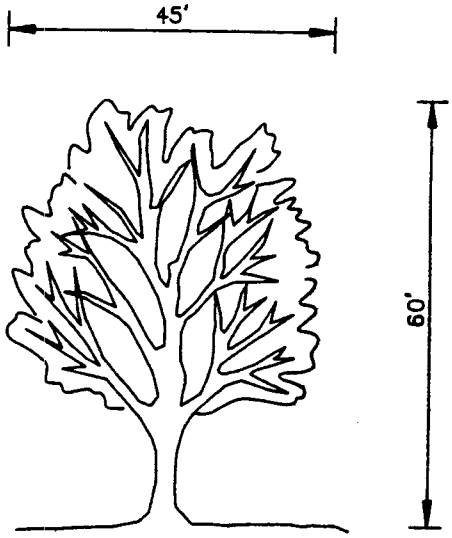

TYPICAL SHAPE OF TREE
AFTER CROWN REDUCTION AND
THINNING IS COMPLETED

THE PURPOSE OF THE CROWN REDUCTION/THINNING METHOD OF THE TREE TRIMMING IS TO REDUCE THE HEIGHT AND WIDTH OF THE TREE BY APPROXIMATELY TWENTY-FIVE PERCENT (25%), AND TO RETAIN A WELL BALANCED TREE SHAPE AS THE END RESULT.

SCALE: NONE	**CITY OF ST. HELENA**	DATE: NOV. 199[illegible]
DRAWN: DRH	STANDARD FOR CROWN REDUCTION/ THINNING OF TREES	STD. NO.
CHK:		704
APPVD:		

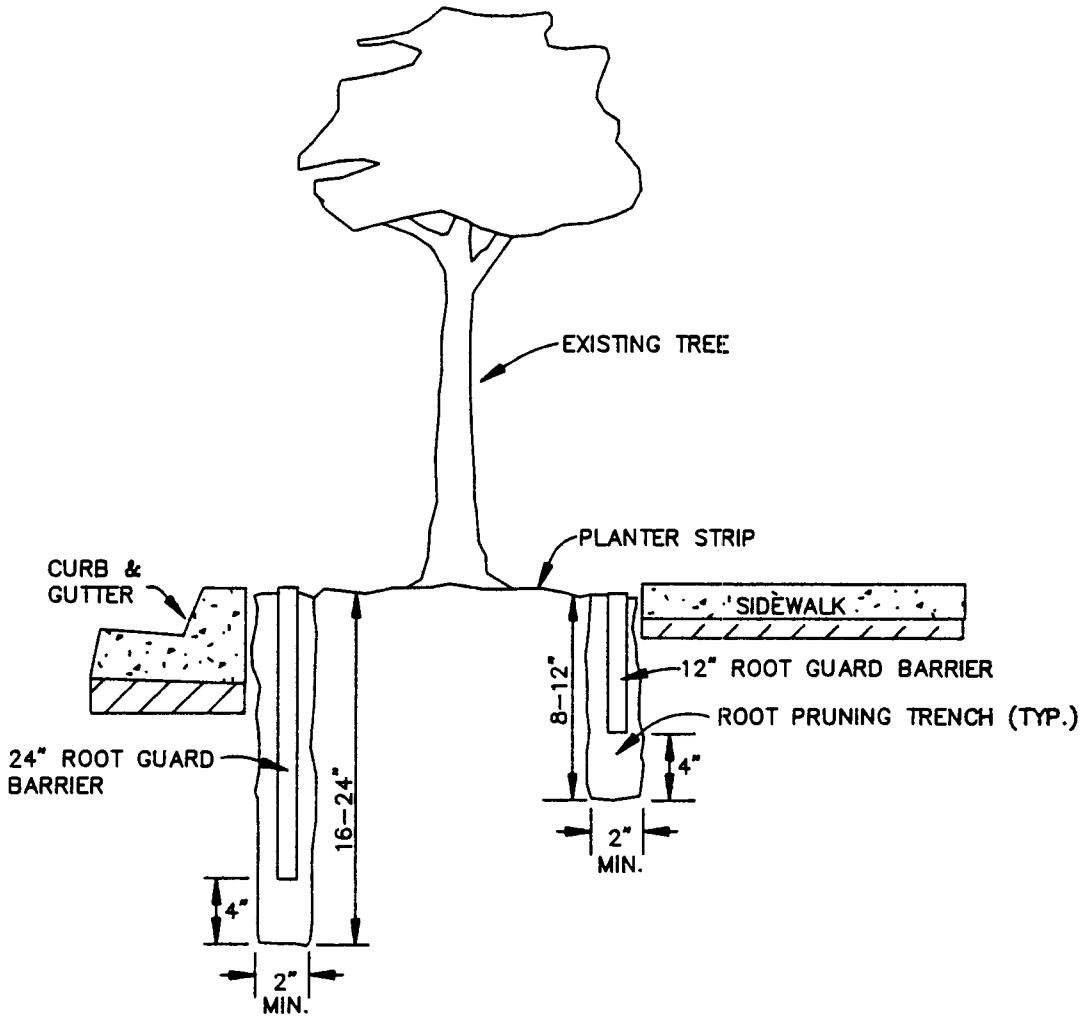

1. TOP OF BARRIER MUST BE AT GRADE, (NEVER BELOW).
2. POSITION BARRIER AGAINST STRUCTURE OR AS CLOSE TO STRUCTURE AS POSSIBLE.
3. 24" ROOT GUARD BARRIER TO BE INSTALLED ALONG THE LENGTH OF REPLACED CURB OR TO THE LIMITS OF THE TREE DRIPLINE.
4. 12" ROOT GUARD BARRIER TO BE INSTALLED ALONG THE LENGTH OF REPLACED SIDEWALK OR TO THE LIMITS OF THE TREE DRIPLINE.
5. ROOT GUARD BARRIERS SHALL NOT BE INSTALLED IN AREAS WHERE THERE ARE NO EXISTING TREES. NEW TREES SHALL BE PLANTED IN "DEEP ROOT PLANTER BOXES" PER STANDARD DRAWING T-1.
6. WHEN ROOT PRUNING EXCESSIVELY LARGE ROOT SYSTEMS ALONG SIDEWALKS, THE 8" ROOT GUARD BARRIER SHOULD BE USED IN PLACE OF THE 12" BARRIER.
7. WHEN ROOT PRUNING EXCESSIVELY LARGE ROOT SYSTEMS ALONG THE CURB, THE 16" ROOT GUARD BARRIER SHOULD BE USED IN PLACE OF THE 24" BARRIER.
8. DURING CONSTRUCTION THE BARRIER CAN BE PLACED AGAINST THE INSIDE OF THE FORM.
9. THE RAISED ROOT DEFLECTORS MUST BE FACING TOWARDS THE TREE.
10. OOT PRUNING TRENCH SHALL BE BACKFILLED WITH SELECT NATIVE BACKFILL MATERIAL.

SCALE: NONE	CITY OF ST. HELENA	DATE: NOV. 1993
DRAWN: DRH	STANDARD ROOT GUARD BARRIER SPECIFICATIONS	STD. NO. 705
CHK:		
APPVD:		