City of St. Helena
Sewer System Management Plan
(SSMP)

City of St. Helena
Wastewater Treatment and Reclamation Plant
Sewer System Management Plan

1 Goals 1-1

2 Organization 2-1

3 Legal Authority 3-1

4 Operation and Maintenance Program 4-2
- 4.1 Collection System Map 4-2
- 4.2 Prioritized Preventive Maintenance 4-2
- 4.3 Rehabilitation and Replacement 4-3
- 4.4 Training 4-4
- 4.5 Contingency Equipment and Replacement Inventories 4-4

Attachments:
- Collection System Map
- Infiltration/Inflow Analysis (2000)
- Sewer Flow Isolation Study (2007)
- Manhole Surveys
- Sanitary Sewer Video Inspection Work Sheet
- Sanitary Sewer Maintenance Report
- Sanitary Sewer Work Sheet
- Outreach to Plumbers & Sewer Contractors
- Training Attendance Form

5 Design and Performance Provisions 5-5
- 5.1 Standards for Installation, Rehabilitation and Repair 5-5
- 5.2 Standards for Inspection and Testing of New and Rehabilitated Facilities 5-6

Attachments:
- Sanitary Sewer System Design & Construction Standards

6 Overflow Emergency Response Plan 6-1
- 6.1 Notification 6-1
- 6.2 Response 6-1
- 6.3 Reporting 6-4
- 6.4 Impact Mitigation 6-4

Attachments:
- Overflow Emergency Response Plan
  - Attachments:
    - SSO Event Report From
    - SSO Water Quality Monitoring Plan
- SSO and Backup Response Plan Field Guide

7 Fats, Oils, and Grease (FOG) Control Program 7-1
7.1 Identification & Sewer Cleaning 7-1
7.2 Source Control 7-1
7.3 Facility Inspection 7-1
7.4 Legal Authority 7-1
Attachments:
Grease Trap Ordinance
FOG Outreach Materials
FOG Inspection Materials

8 System Evaluation and Capacity Assurance Plan 8-1
8.1 Capacity Assessment 8-1
8.2 System Evaluation and Capacity Assurance Plan 8-1

9 Monitoring, Measurement, and Program Modifications 9-1

10 SSMP Program Audits 10-1

11 Communication Program 11-1

Introduction

The City of St. Helena's (City) sanitary sewer collection system conveys wastewater for the area within the city limits (3,285 acres) to the Wastewater Treatment and Reclamation Plant (WTRP). The system includes 18.8 miles of sewer pipelines ranging in diameter from four to 24 inches, and one lift station located on Crinella Drive. The WTRP has a permitted average dry weather flow design capacity of 0.5 million gallons per day (MGD). The City currently has a population of about 6,200 residents with a projected growth rate of less than one percent per year.

The City's Sewer System Management Plan (SSMP) was initially developed in 2006 to comply with requirements of a 2005 Order from the San Francisco Regional Water Quality Control Board (Regional Water Board). The SSMP was revised several times in order to comply with a State Water Resources Control Board (State Water Board) Order and subsequent amendments. The SSMP complies with Provision D.13 of State Water Board Water Quality Order (WQO) 2006-0003 Sanitary Sewer System Waste Discharge Requirements (WDR) and the associated Monitoring Reporting Program (MRP). This latest version of the SSMP, Version 5, includes recommendations from an internal SSMP audit performed in April 2014 as well as updates needed to comply with the State Water Board's latest amendments to the MRP that were promulgated in July 2013 as part of WQO-2013-0058-EXEC.

1.0 Goals

1 Goals

The City of St. Helena's goals include the proper management, operation, and maintenance of all parts of the wastewater collection system, adequate capacity to convey peak flows, minimizing frequency of Sanitary Sewer Overflows (SSOs), and mitigating the impact of SSOs.

2.0 Organization

2 Organization

The City's organization chart identifies agency staff responsible for implementing, managing, and updating the SSMP. Additionally, it includes the chain of communication for responding to and reporting SSOs. Figure 1 illustrates the organization chart for the City and roles are further described below.

Figure 1. City of St. Helena Organization Chart for SSMP

City Council. The Mayor and Council members represent the residents of St. Helena, review public policy, and adopt policies responsive to the community. The City Council meets two evenings per month.

- The City Council's role in the SSMP is as follows:
  - Look to the Director of Public Works for reports on any SSOs
  - Make decisions regarding resolution of collection system problems

City Manager. The City Manager is the administrative head of the government of the City responsible for providing general administrative management of the City; providing a liaison between the City Council and Staff; carrying out, on behalf of the City Council, its policies, rules, regulations and laws; supervising the preparation of the annual budget; and overseeing the preparation of council agendas and material for Council Meetings.

City Clerk. Provides information updates to City Council and arranges for emergency meetings if necessary.

- The City Clerk's role in the SSMP is as follows:
    - May, at times, receive phone calls regarding SSOs
    - Arrange for emergency meetings, if necessary

Public Works Director / City Engineer. Establishes policy, plans strategy, leads staff, allocates resources, delegates responsibility, authorizes outside contractors to perform services, and may serve as public information officer. Prepares wastewater collection system planning documents; manages capital improvement delivery system; documents new and rehabilitated assets; and coordinates development and implementation of SSMP.

The City Engineer is legally responsible for monitoring, compliance and reporting associated with the City's National Pollutant Discharge Elimination System (NPDES) permit, the State Department of Health Services water purveyor permit, transportation and commercial trucking permits, surface mining reclamation, the safety of the City's two dams and reservoirs and their operations, and is the City's primary point of contact with the ecological, environmental, and other water quality and water rights regulatory agencies.

The City Engineer plans, bids, manages and monitors all Capital Improvement Projects (CIP) for each of the Department of Public Works' functional divisions. For private (non-City) projects, the City Engineer or City Surveyor are responsible for the review of tentative and final parcel and subdivision maps, improvement agreements, inspection of privately-constructed public improvements, review of use permits, review and approval of all encroachment permits, staff for the Tree Committee, monitoring of mitigation measures, safety issues of all City facilities, staffing of Napa County Transportation Planning Agency and Water Resources Planning Committee. DPW Administration personnel attend and participate in each Planning Commission and City Council meeting.

- The Public Works Director / City Engineer's role in the SSMP is as follows:
    - Prepares wastewater collection system planning documents
    - Coordinates development and implementation of the SSMP
    - Reports SSOs to City Council
    - Works with Sewer System Supervisor to resolve and report SSOs
    - Works with Sewer System Supervisor to implement fats, oils, and grease program, and other special collection system programs.

Assistant Public Works Director / City Engineer. Under supervision from the Director of Public Works and City Engineer, performs complex professional and technical civil engineering work in the design, evaluation and construction of streets, traffic controls,

landscaping, parks, storm drains, sewers, water and other public works projects; serves as a project manager on Capital Improvement Projects; reviews engineering reports, drawings, specifications and calculations for buildings, structures, streets, sewers and other public works facilities to ensure compliance with current industry practices, codes, regulations and ordinances; performs other related duties as required.

- The Assistant City Engineer's role in the SSMP is as follows:
    - Assists in preparation of wastewater collection system planning documents
    - Assists in development and implementation of SSMP

Senior Management Analyst. Under general supervision from the Director of Public Works and City Engineer, performs a wide variety of administrative, office management, contract administration and program management, tasks; assists the Director of Public Works by providing information or directing information requests according to established procedures; administration of all professional services agreements and construction contracts; maintains all pertinent documents; learns and assists in the development of all policies, procedures and work methods associated with assigned duties; assists in the development and administration of new and existing programs; administers all supplemental funding sources and monitors expenditures; provides supervision of subordinate staff; performs other related duties as required.

- The Senior Management Analyst's role in the SSMP is as follows:
    - Assists Public Works Director with management of SSMP
    - Receives reports of SSOs

Sewer System Supervisor. Under general direction from the Director of Public Works and City Engineer, supervises, evaluates and participates in the work of crews responsible for construction, repair, maintenance and operational work in the Sewers operational unit of the Public Works Department; ensures safe work practices, work quality and accuracy; maintains appropriate work records which may include time cards and work orders; serves as a technical resource for assigned work crews and the Director of Public Works/City Engineer; performs other related duties as required.

- The Sewer System Supervisor's role in the SSMP is as follows:
    - Manages field operations and maintenance activities
    - Provides relevant information to Public Works Director
    - Leads emergency response
    - Works with Public Works Director to report SSOs to the State
    - Trains field crews
    - Works with Public Works Director to implement fats, oils, and grease program, and other special collection system programs.

Collection System Operation Team. Under the supervision of the Sewer System Supervisor performs field operations and maintenance activities, provides relevant information to agency management, prepares and implements contingency plans, leads emergency response, and investigates and reports SSOs. Performs preventive maintenance

activities, mobilizes and responds to notification of stoppages and SSOs (mobilize sewer cleaning equipment, by-pass pumping equipment, and portable generators).

- The Collection System Operation Team's role in the SSMP is as follows:
    - Perform preventative maintenance activities
    - Respond to stoppages and SSOs
    - Report equipment needs to Sewer System Supervisor

The names and contact information for each person in the positions described above are kept on file at the Public Works office. The information is updated on an on-going basis as personnel changes are made.

3.0 Legal Authority

3 Legal Authority

This section demonstrates the City's legal authority to control infiltration and inflow (I/I) and to require proper construction, testing and inspection of their sewer system.

The City's Sewer Service Ordinance, Chapter 13.20 of the Municipal Code, includes information on sewer charges, use of funds, rules for annexation to the municipal sewer, prorated charges for line extensions, installations of adequate capacity, compulsory connections, and standard sewer construction details and specification adoption procedures. Additionally, the City's Wastewater Discharge Ordinance, Chapter 13.24 of the Municipal Code , includes prohibitions on discharges, storm drainage, ground water, unpolluted water, and limitations on radioactive wastes, use of garbage grinders, point of discharge, holding tank waste, and wastewater strength. The Wastewater Discharge Ordinance also includes provisions on wastewater volume, administration, user charges and fees, enforcement, abatement, and grease traps. The City's entire Municipal Code is available online at www.codepublishing.com/CA/sthelena.

4.0 Operation and Maintenance Program

4 Operation and Maintenance Program

4.1 Collection System Map

A map of the City's collection system is maintained and updated periodically based on the Sewer System Supervisor's guidance. The current version of the map (December 2000, attached) will be updated once closed-caption television (CCTV) inspections of the collection system are complete. The collection system map is accessible to City staff in both hard copy and electronic formats. The current collection system map contains the following information:

- Manhole ID numbers
- Manhole locations with reference to streets and property lines
- Line size and direction of flow
- Force main size and direction of flow
- Private lines and direction of flow
- Cleanouts
- Lampholes
- Pump stations
- Wastewater treatment plant
- Rivers/creeks

Subsequent versions of the map will include the following additional information:

- GPS coordinates
- Manhole rim elevations
- Manhole invert elevations
- Material types
- Worker safety information
- Pipe slope
- Date built
- Pipe invert elevations

4.2 Prioritized Preventive Maintenance

The City completed an Inflow/Infiltration (I/I) Analysis in July 2000 (attached) and a Sewer Flow Isolation Study in the spring of 2007 (attached). The I/I Analysis recommend that the City use smoke testing, flow isolation, manhole inspections, and source defect/cost benefit analyses to reduce the amount of I/I entering the system during wet weather. The Sewer Flow Isolation Study assessed nighttime flows at 32 manhole locations to identify areas of excessive apparent infiltration. Based on this evaluation, subsequent manhole and CCTV inspections were recommended and the City is using this information to prioritize system rehabilitation. Additionally, previous manhole surveys and system CCTV efforts (see attached examples) are evaluated to prioritize maintenance activities.

Through participation with BAWCA, the City developed a fact sheet educating plumbers and sewer contractors on preventing SSOs and informing the City if work in private laterals may

cause issues in sewer main downstream (attached). This fact sheet will be distributed to all plumbers and building contractors who perform work in the City's service area.

4.3 Rehabilitation and Replacement

The overall goal of the City is to maintain the collection system and prevent SSOs. Currently, 80% of inspections are in response to a problem and 20% are routine maintenance in areas which have previously had a problem. Every Friday, all suspect manholes are visited. The Collection System Operation Team completes the attached *Sanitary Sewer Work Sheet* when performing inspections. Additionally, all manholes are visited systematically.

The City is in the process of video-inspecting the entire collection system. Crews have developed a video library of 70% of the system length including the entire portion west of Highway 29 and approximately a third of the portion East of the Highway. Inspections will continue starting in June 2014 with anticipated completion by the end of 2015.

The City's Street Department maintains a *Sanitary Sewer Maintenance Report* which is recorded each time maintenance work is performed on a line (see attachments). Sewer line maintenance is generally performed twice per year, and as necessary. The City has a planned schedule for cleaning sewer lines that are highly susceptible to root intrusion, grease, and various debris. The frequency of cleaning a sewer line is determined by the cleaning history needs, with the goal of preventing sewer line blockage and overflows. Areas with previous SSOs caused by grease or roots are reviewed more frequently to ensure that the same problem does not occur again.

The Wastewater Enterprise Fund budget, approved with Resolution 2006-86, is used to ensure adequate resources are available to maintain the City's collection system. The fund includes:

- Wastewater Enterprise Utility Fund (Fund 71). Accounts for sewage collection and treatment activities associated with the City's wastewater system.
- Wastewater Capital Projects (Fund 73). Used to account for costs associated with large capital projects of the sewer fund.
- Wastewater Impact Fees (Fund 74). Accounts for connection charges paid by new users of the sewer system. Fees collected are to be used for the costs of constructing and improving the Wastewater Treatment Plant and Sewer Collection System only.

The Wastewater Budget is around $200,000, with small variations from year to year; for Fiscal Year 2014-2015 it is $209,454."

The City's current Capital Improvement Plan covers the years 2011/12 through 2016/17. The specific projects budgeted in the Capital Improvement Plan include:

City System Upgrades; Sewer Rehabilitation	Install pipe liners, seal manholes and disconnect existing building drains to reduce infiltration/inflow which impacts system and plant.
Oak Avenue Extension	Construct 1300' of new 12" sewer main from Mitchell to Grayson.
Crinella (Park to Main)	Construct 500' of 6" main to serve 15 units fronting on Main, but lower than existing sewer main.
Crinella Pump Station	Needs description (this is project S-49 in CIP)
Sulphur Springs Phase II	Construct 2000' of 8" main to serve 40 units and future development north of Sulphur Springs.
WWTP Expansion Phase I & II	Plan and design the upgrade of the existing wastewater treatment plant to tertiary level treatment and expansion. Construct project to upgrade and expand the treatment plant. See also Section 8.1.
Impact Fee Studies	Conduct a state required study of impact fees every five years.
Front End Loader and Other Vehicle Replacement Program	Equipment purchase

4.4 Training

The "Training Sign-In Form" (attached) is used to keep a log of staff attendance at training events. The Collection System Operation Team is required to participate in several trainings per year.

The City offers the following formal and informal training events:

- *Technical training*: Training sessions are scheduled periodically by the Chief Wastewater Treatment Plant Operator to address training on routine O&M activities. Most training is completed as on-the-job training, where knowledgeable staff trains less experienced staff on the O&M of equipment.
- *Skills training* (for equipment use and maintenance tasks): Staff members learn on the job without the use of standard O&M procedures. If new equipment is purchased, the supervisor requests that the manufacturer offer an informational training on the proper use of the equipment.
- *Safety training*: Safety meetings are conducted by the supervisor, who selects topics based on needs of staff. American Water Works Association video tapes are also available.

4.5 Contingency Equipment and Replacement Inventories

Recent equipment purchases include a new hydroflushing unit in 2008 and a new CCTV camera in 2012.

4.0 Operation and Management Program

Attachments

Collection System Map

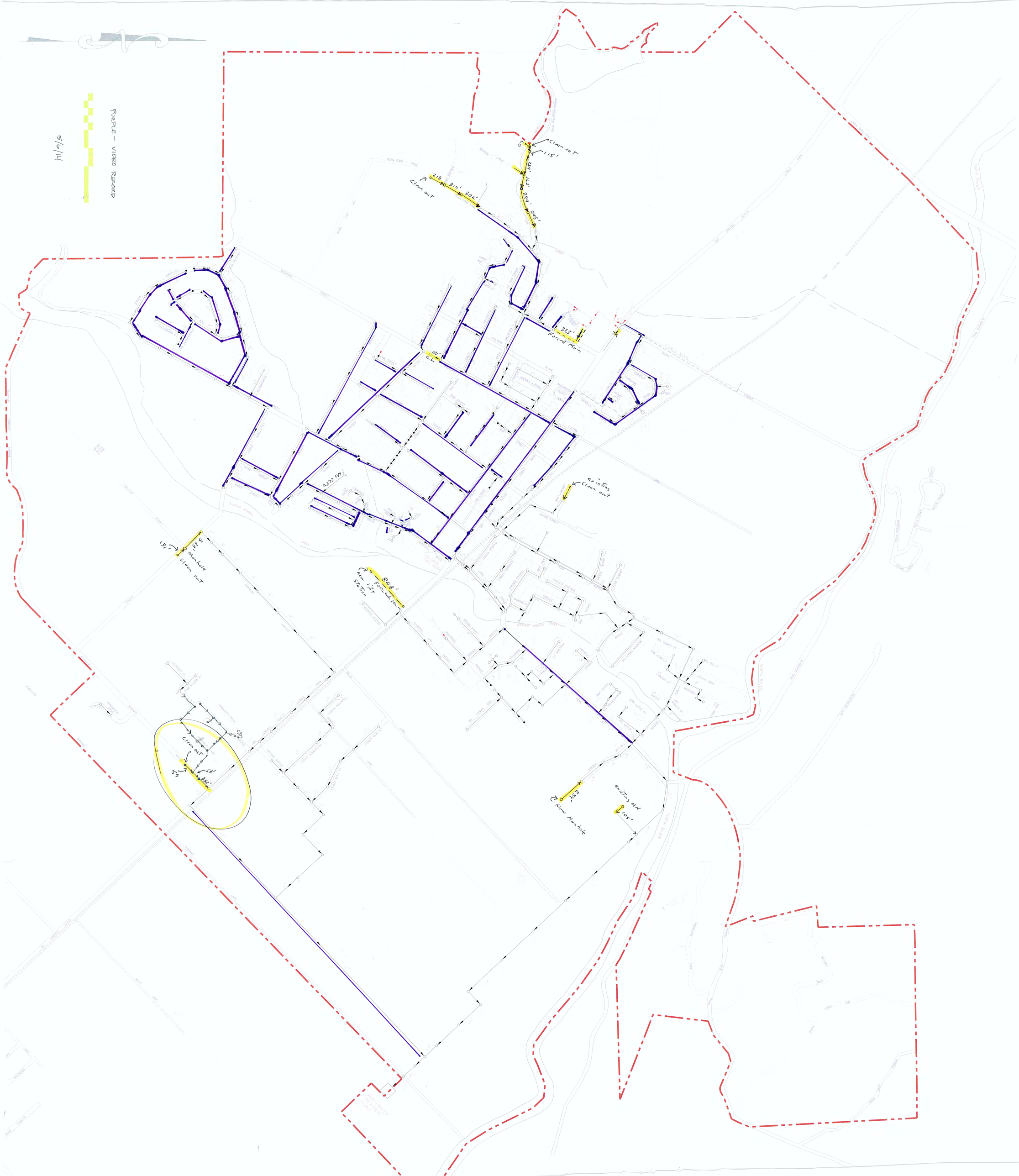
5/6/14
PARTIAL VIDEO RECORD
Clean out
115'
254'
142'
294'
265'
218'
310'
202'
Clean out
328'
Forced Main
118'
CL
No CCTV
Existing
Clean out
131'
33'
Manhole
Clean out
818'
Forced main
New lift
Station
Clean out
159'
252'
New Manhole
existing MH
105'
NAPA RIVER

Infiltration/Inflow Analysis (2000)

INFLOW / INFILTRATION ANALYSIS

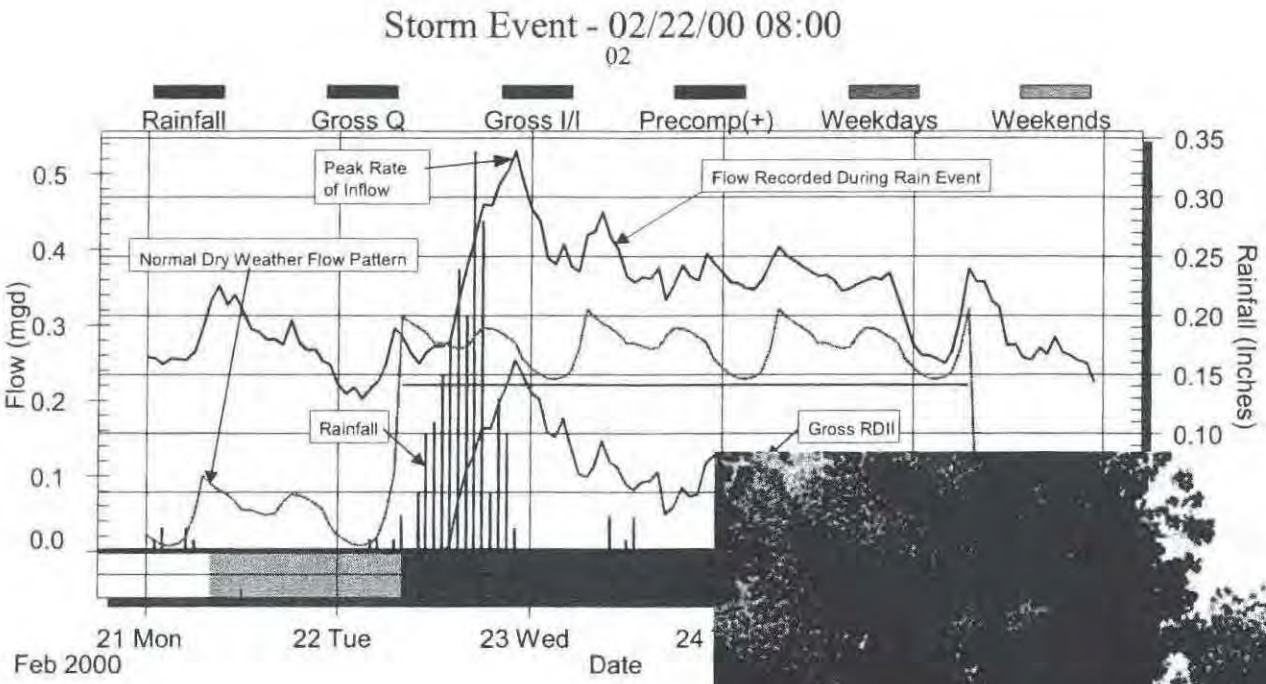

Prepared For:

THE CITY OF ST. HELENA

July 6,2000

Prepared By:

ADS Environmental Services
3830-A Charter Park Drive
San Jose, CA 95136
(408) 448-2315

ADS ENVIRONMENTAL SERVICES®

August 5, 2004

CITY OF ST. HELENA
AUG 06 2004
Department of Public Works

Bob Kyle
City of Saint Helena
1480 Main Street
Saint Helena, CA, 94574

Re: 2000 ADS RDII Analysis Report

Dear Mr. Kyle,

ADS Environmental Services is pleased to have the City of Saint Helena (City) as a primary client in the Northern Californian area. ADS makes every attempt to provide the City with the most accurate and up-to-date information concerning the wastewater flow system. We take great pride in providing our clients with the best-trained flow monitoring staff in the flow monitoring business.

Please find enclosed a CD containing the report we completed for you in 2000 as requested. The results listed in the report are final. The scattergraphs for Appendix D I had to generate from the only data set we could locate.

One note of caution is that I am not sure if the data we located and I have provided to you in the scattergraphs and in Excel format is the final data set. If the Excel data is to be fed into a model it should be done with caution. If you would like me to review the data set to ensure it is the final one, I am certainly able to do so, but we would have to quote a price for the time required for me to complete the review. I apologize for this inconvenience.

Please do not hesitate to contact me at the ADS Huntington Beach office on (714) 379 9778, if you have any further questions or require any further flow metering services.

Sincerely
ADS ENVIRONMENTAL SERVICES

Gillian Woodward, P.E.
Senior Civil Engineer

AN AXEL JOHNSON INC COMPANY
15205 Springdale St, Huntington Beach, CA, 92647 • Phone: 714-379-9778 • Fax: 714-379-9588

TABLE OF CONTENTS

1 Project Summary and Recommendations 1

1.1 Project Objectives 1
1.2 Project Scope of Work 1
1.3 Basin Flow Analysis 1
1.4 RDII Analysis 3
1.5 Hydraulic Analysis 4
1.6 Recommendations 5
1.6.1 Short Term Recommendations: 5
1.6.2 Long-Term Recommendations: 6

2 Project Approach 7

2.1 Basin Identification 8
2.2 Flow Monitoring Equipment 10
2.3 Installation 11
2.4 Data Collection, Calibration, and Quality Assurance 12
2.5 Rain Gauges and Rainfall Data 13

3 Basin Flow Analysis 15

3.1 Net Dry Weather Flows 15
3.2 Net Wet Weather Flow 16
3.2.1 Average-Day Wet Weather Flows 16
3.2.2 Peak-Hour Wet Weather Flows 17
3.3 Net Minimum Flows – Dry vs. Wet Periods 19

4 RDII Analysis 20

4.1 Net RDII Analysis 21
4.2 Q vs. i diagrams 23
4.3 Normalized RDII Analysis 24

5 Monitoring Site Hydraulic Analysis 26

5.1 Peak-hour Wet to Average-Day Dry Flow Evaluation 26
5.2 d/D Ratio Evaluation 27
5.3 Scattergraph Analysis 29

6 Conclusions and Recommendations 31

6.1 Conclusions 31
6.2 Recommendations 32

1 PROJECT SUMMARY AND RECOMMENDATIONS

ADS Environmental Services performed an Inflow & Infiltration (I/I) analysis in the City's sanitary sewer collection system. This report contains a summary of the flow monitoring data collected, the study methodology, and the subsequent I/I analysis. A hydraulic and capacity analysis was also performed based on the flow monitoring data.

1.1 Project Objectives

The objective of this I/I study was to quantify the amount of Rainfall Dependent Inflow and Infiltration (RDII) entering sub-basins (Basins) within the collection system. Then, these Basins were to be prioritized based on the amount of RDII entering each; with recommendations provided to locate and quantify specific defects that allow the extraneous flow to enter the system.

1.2 Project Scope of Work

The scope of work for the I/I Study included the following tasks:

- Develop flow Basins and identify possible monitoring locations.
- Investigate flow monitoring sites.
- Install temporary flow monitors at proposed locations.
- Perform flow monitoring for a period of one week during the dry weather period and for a period of four weeks during the wet weather period.
- Quantify RDII, and make recommendations for further action based on the flow monitoring data collected

1.3 Basin Flow Analysis

The flow monitoring study consisted of dividing the collection system into discrete Basins and simultaneously monitoring the discharge of each Basin during both a wet and the dry weather period. The flow data was used to calculate the amount of RDII entering each Basin.

The collection system was divided into a total of six (6) Basins; which were comprised of nine (9) flow monitoring sites (monitored using ADS Model 1500 open channel flow monitors). A flow schematic of the Basins is provided in Chapter 2. Two (2) tipping bucket rain gauges were also used to measure the volume and intensity of each rainfall event. Rainfall and flow data was collected at 15-minute intervals for the entire duration of the project.

Flow and rain monitoring was performed during the following two periods:

- Dry Weather: September 11, 1999 through September 21, 1999
- Wet Weather: February 5, 2000 through March 7, 2000

The average daily flows were calculated for each Basin for both the dry and wet weather periods. A comparison of the dry weather flows and wet weather flows during the largest volume storm event (Storm No. 1) is presented graphically in Figure 1.1.

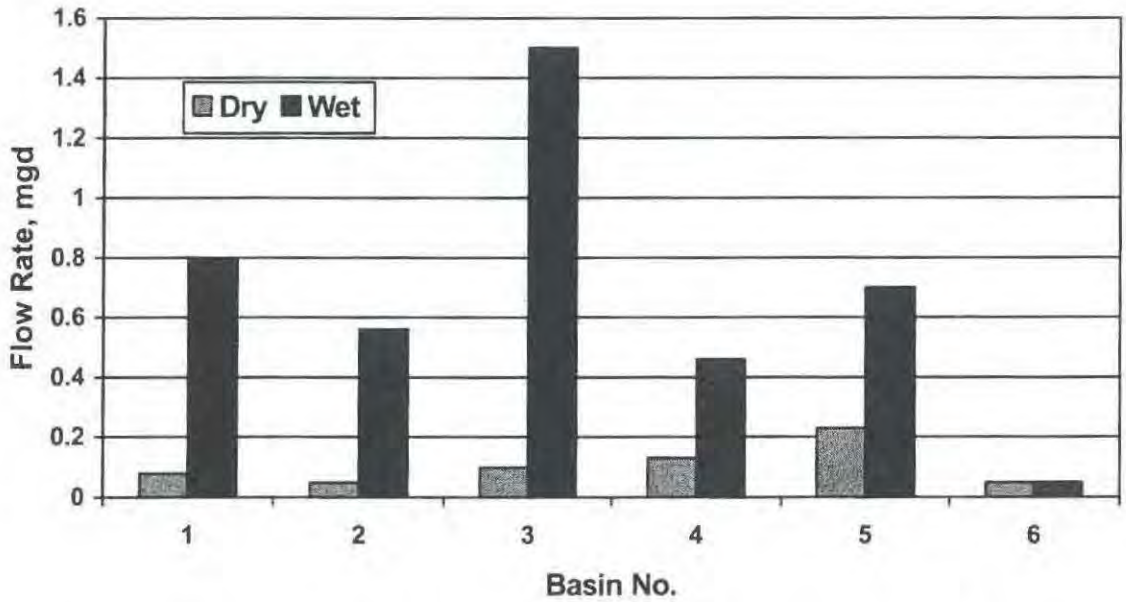

Figure 1.1 - Average Daily Dry Vs Average Daily Wet Weather Flows

As shown in Figure 1.1, wet weather had varying effects on each of the Basins. In Basin No. 6 for example, the average-day wet weather flow was nearly equivalent to the

average-day dry weather flow. Conversely, in Basin No. 3, the average-day wet weather flow was about fifteen (15) times higher than the average-day dry weather flow.

1.4 RDII Analysis

Net RDII was calculated for each Basin by subtracting average dry weather flows from wet weather flows and compensating for pre existing infiltration. The Basins were then normalized by dividing the net RDII by the total number of inch diameter-miles of pipe within each Basin. The RDII was further normalized by dividing each Basin's computed net RDII for each storm by the inches of rainfall observed during the storm. A summary of the normalized RDII for each Basin (two-storm average) is presented in Figure 1.2.

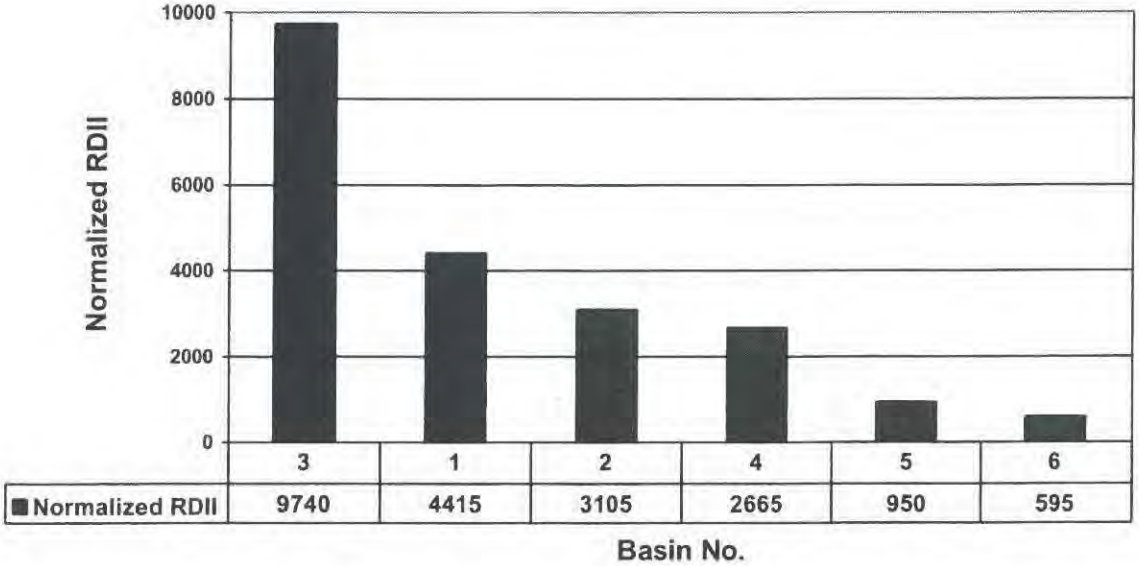

Figure 1.2 – Normalized RDII (gal / idm-inch rain)

As shown in Figure 1.2, the Basins with the highest normalized RDII (averaged over two storm events) were Basins 3 and 1. These Basins accounted for about 68% of the total study RDII normalized volume (in total gallons per inch of rain). RDII in Basins 2 and 4 was slightly below the average for the study Basins and accounted for about 23% of the study RDII volume. RDII in Basins 5 and 6 was less than 1/3 of the study

average normalized RDII and accounted for only about 9% of the total study RDII volume.

1.5 Hydraulic Analysis

A hydraulic analysis was performed at each flow monitoring location using gross flows to evaluate the pipeline in the immediate area around the flow monitor. The basis of this evaluation was to compare the peak-hour wet flow to average-day dry flow ratios and to compare the depth-of-flow to the diameter (d/D) of the pipe.

The peak-hour wet to average-day dry flow ratios (peaking factors) were graphed and are presented in Figure 1.3.

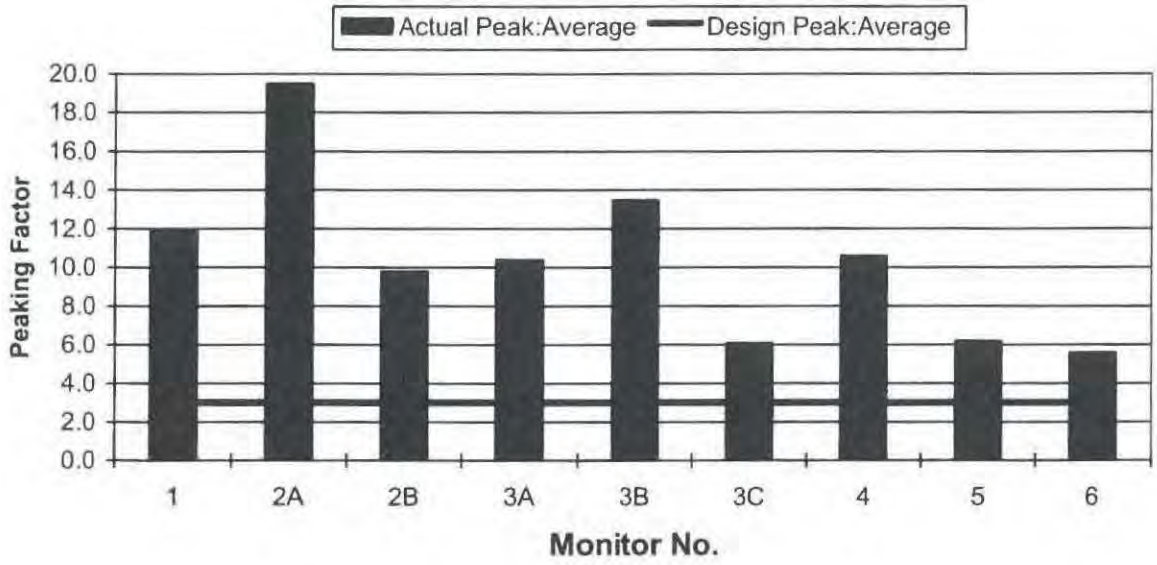

Figure 1.3 - Peak to Average Ratio (Actual Vs Typical Design)

As shown in Figure 1.3, the gross flow peaking factors in the immediate vicinity of the flow monitors ranged from 5.6 to 19.5. All of the pipelines associated with the monitors exhibited flow peaking factors that exceeded 3.0 (which is commonly used as a design peaking factor). Therefore these pipelines may be exceeding design capacity.

The d/D ratio was graphed for each pipeline associated with the monitors and is presented in Figure 1.4.

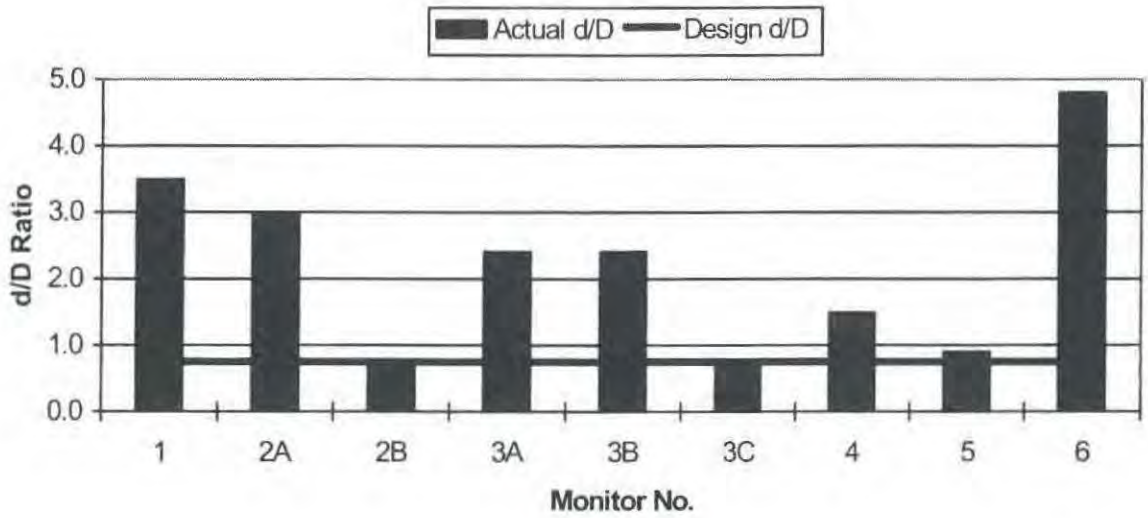

Figure 1.4 - d/D Ratio Vs Typical Design

Sewers are commonly designed to handle a d/D ratio of 0.75 at peak flows. The graph in Figure 1.4 shows that the d/D ratio during the study period exceeded 0.75 for flow monitoring sites 1,2A, 3A, 3B, 4, 5, and 6. In fact, five of these sites exceeded a d/D ratio of 2.0, which means the pipeline was in significant surcharge conditions with wastewater traveling up the manhole. This indicates that the pipelines in the immediate area of the flow monitors listed above were experiencing backup conditions and may be exceeding design capacity during these periods.

1.6 Recommendations

Based on the RDII analysis, it is recommended that the following short and long term projects be considered.

1.6.1 Short Term Recommendations:

- Perform Smoke Testing on Basins 1, 2, and 3.
- Perform flow isolations on Basins 1, 2, 3, and 4.

- Conduct T.V. and manhole inspections based on results of smoke testing and flow isolations.
- Perform a source defect/cost benefit analysis based on the results of the manhole inspections and T.V. inspections.
- Begin to rehabilitate defects based on cost benefit analysis.

1.6.2 Long-Term Recommendations:

- Implement long-term flow monitoring. This will help gauge the success of any future rehabilitation work.
- Implement comprehensive infrastructure management system.

2 PROJECT APPROACH

Rain Dependent Inflow and Infiltration (RDII) consists of extraneous water that enters a sanitary sewer system during or just after a storm event. Inflow is typically described as water that directly enters a system through roof leaders, clean-outs, foundation drains, sump pumps, and cellar, yard, and area drains. Infiltration is typically described as water that enters a sewer system from the ground through defective pipes, pipe joints, damaged lateral connections, or manhole walls.

Most collection systems have been designed to convey some quantity of RDII. Excessive RDII however, can have the following impacts on a collection system:

- Reduced collection system capacity
- Increased probability of sanitary sewer overflows.
- Increased treatment and transport costs.

The most cost effective means of identifying, quantifying, and prioritizing RDII entering a collections system is through a comprehensive RDII study comprised of the following major components:

1. Collection system review and Basin identification.
2. Simultaneous flow monitoring and rain gauging.
3. Data analysis and Basin prioritization.
4. Sanitary Sewer Evaluation Surveys (SSES) including smoke testing, manhole inspection, flow isolation, dye water flooding, closed circuit television, etc.

ADS conducted tasks 1 through 3 of the above RDII study; each of which are discussed in detail in this report.

2.1 Basin Identification

ADS reviewed the City St. Helena sanitary sewer collection system maps. The study area was divided into six (6) separate Basins using nine (9) flow monitors. A map depicting the topographic Basin boundaries is shown in Figure 2.1.

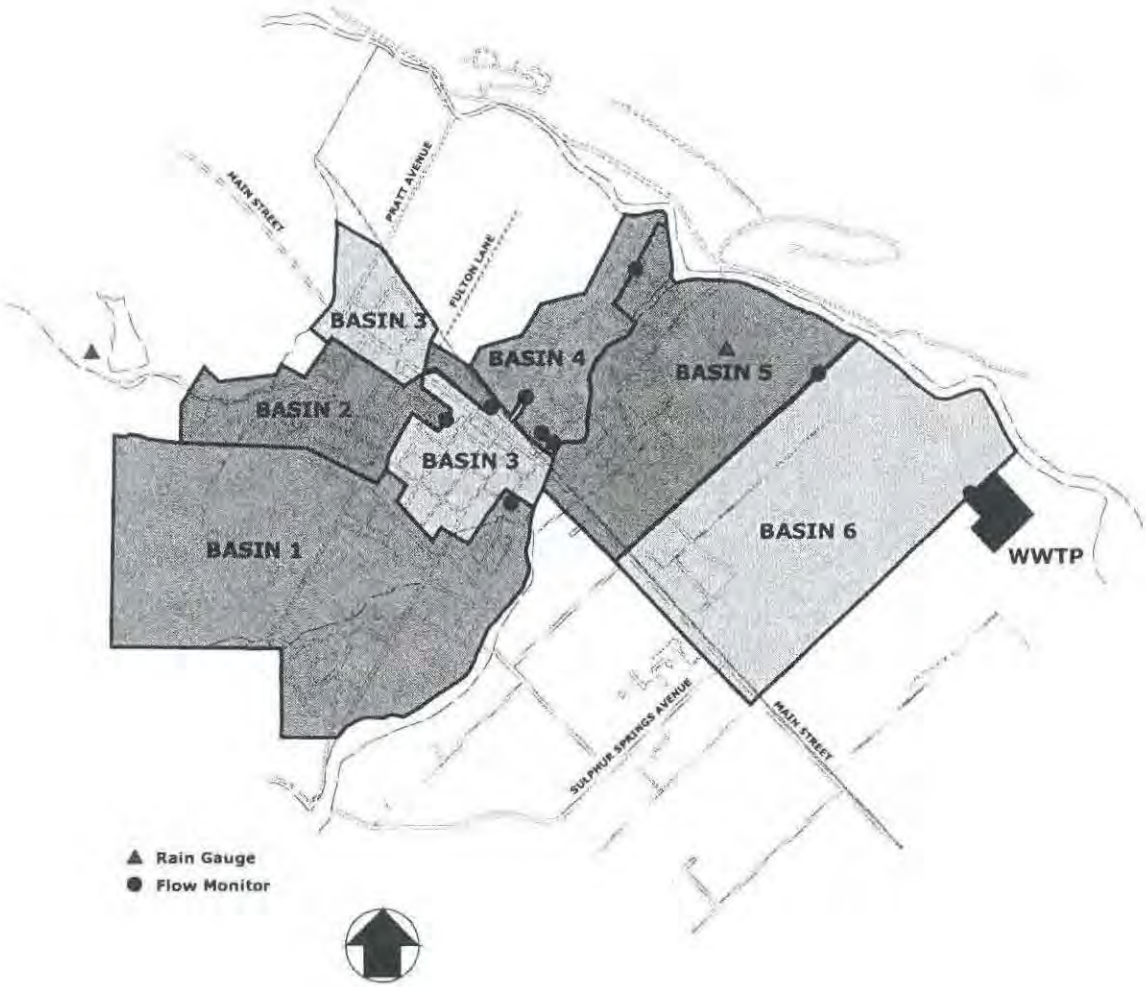

Figure 2.1 – Basin Map

ADS ENVIRONMENTAL SERVICES

A flow schematic of the monitoring locations and Basins indicating direction of flow is shown in Figure 2.2

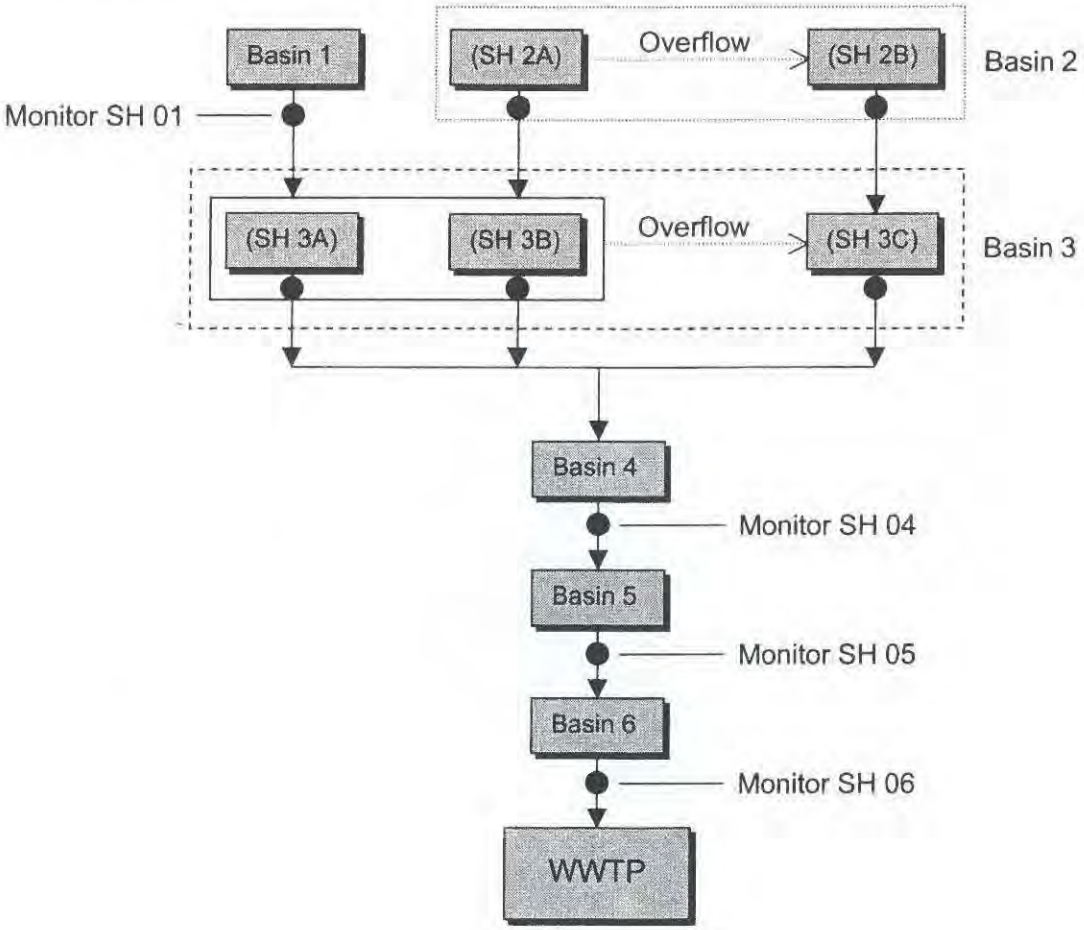

Figure 2.2 – Flow Schematic

Basin 1 was hydraulically independent, while the remaining Basins were hydraulically isolated by adding gross sub-basin (e.g. 2A, 2B, etc.) monitor flows, then subtracting measured gross inflow from measured gross outflow of each Basin according to the flow schematic in Figure 2.2. These Basins were considered as the performance units for purposes of conducting the RDII data analysis and evaluation. The Basins and Basin characteristics are listed in Table 2.1 below along with the basis of hydraulic isolation of each.

Table 2.1
Basin Summary

Basin #	Basis of Hydraulic Isolation	Length of Pipe (lf)	Inch-Miles (in-mi)
1	SH 01	18,020	22.75
2	SH 2A + SH 2B	15,820	19.02
3	SH 3A + SH 3B + SH 3C - (SH 01 + SH 2A + SH 2B)	21,645	25.78
4	SH 04 - (SH 3A + SH 3B + SH 3C)	13,430	23.50
5	SH 05 - SH 04	13,590	25.38
6	SH 06 - SH 05	16,900	39.61

The individual Basin parameters (linear footage of pipe, inch-miles, and Basin drainage areas) presented in Table 2.1 were obtained from the maps and electronic files provided by the City of St. Helena.

2.2 Flow Monitoring Equipment

The monitor used for this project was the ADS Model 1500 open-channel flow monitor. This flow monitor consists of depth and velocity sensors and a battery powered microcomputer. The microcomputer includes a processor unit, data storage, and an on-board clock to control and synchronize the sensor recordings. The monitor was programmed to acquire and store depth of flow and velocity readings at 15-minute intervals. A laptop computer was used in the field to retrieve and store data from each flow monitor.

The ADS Model 1500 uses depth and velocity measurements to calculate the wetted area and average velocity of the wastewater in the pipe. The Continuity Equation (Q=V*A) is then used to calculate flow.

2.3 Installation

Installation of the flow monitoring included the following four steps:

- Site investigation
- Installation of equipment
- Monitor Start-up
- Monitor calibration

A typical Model 1500 flow monitor installation is shown in Figure 2.3.

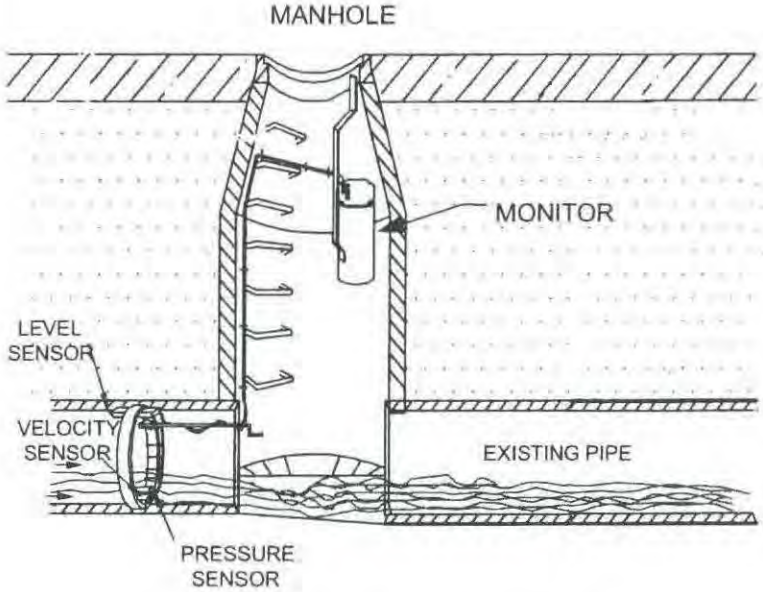

Figure 2.3 – Typical Installation

The installation presented in Figure 2.3 is typical of the configuration used for this study and is customarily used on circular or oval pipes up to approximately 42-inches in diameter or height. In this type of installation, depth and velocity sensors are mounted

on an expandable ring and installed one to two pipe diameters upstream of the pipe/manhole connection in the incoming sewer pipe. This reduces the affects of turbulence and backwater.

2.4 Data Collection, Calibration, and Quality Assurance

During the monitoring period, field crews visited each monitoring location on a weekly basis to retrieve data, verify proper monitor operation, and document field conditions. The following general quality assurance steps were taken to assure the integrity of the data collected:

- **Measure Power Supply:** The monitor is powered by a dry cell battery pack. Power levels are recorded and battery packs replaced, if necessary. A separate battery provides back-up power to memory, which allows the primary battery to be replaced without the loss of data.
- **Perform Pipe Line Calibrations and Confirm Depth and Velocity:** During initial and final site visits (at a minimum), a field crew member descends into the manhole to perform a field measurement of flow rate, depth and velocity to confirm they are in agreement with the monitor. Since the ADS V-3 velocity sensor measures peak velocity in the wetted cross-sectional area of flow, velocity profiles are also taken to develop a relationship between peak and average velocity in the line.
- **Measure Silt Level:** During initial and final site visits, a member of the field crew descends into the manhole and measures and records the depth of silt at the bottom of the pipe. This data is used to compute the true area of flow.
- **Confirm Monitor Synchronization:** The field crew checks the flow monitor's clock for accuracy.
- **Upload and Review Data:** Data collected by the monitor is uploaded and reviewed for comparison with previous data. All readings are checked for

consistency and screened for deviations in the flow patterns, which indicate system anomalies or equipment failure.

2.5 Rain Gauges and Rainfall Data

An important part of an RDII study is the collection and analysis of rainfall data (volume and distribution). The rainfall data is the basis for determining the RDII in each Basin being studied. A chart of rainfall during the study is presented in Figure 2.4.

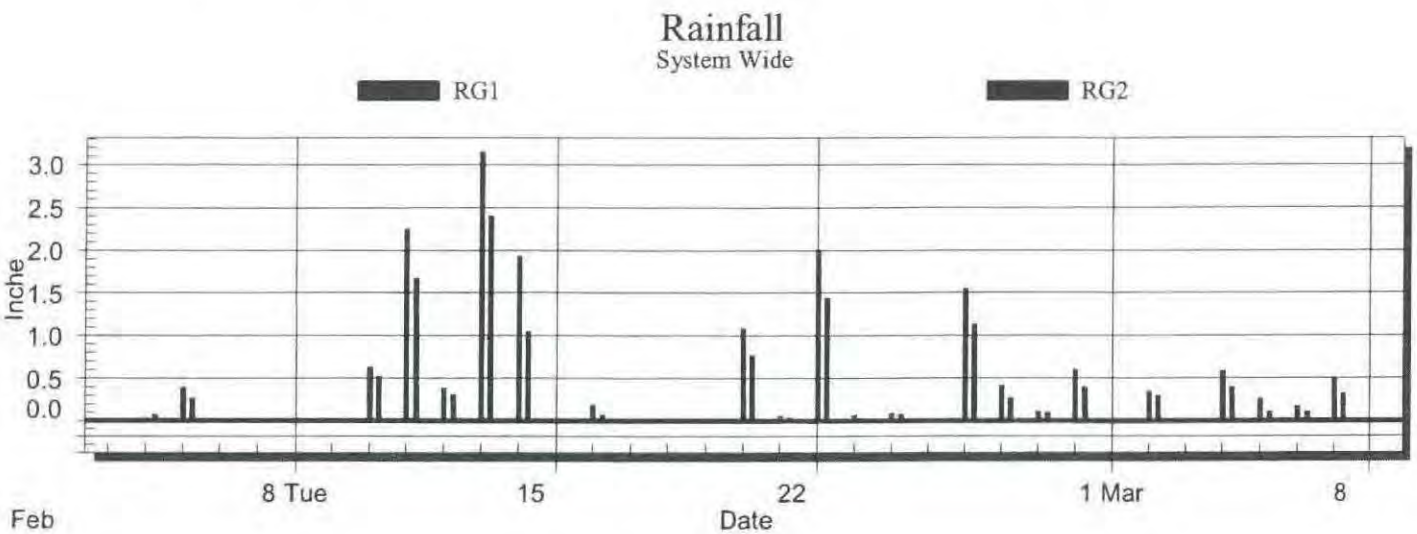

Figure 2.4 – Rainfall Chart

Wet weather data was evaluated for the two (2) largest volume rain events. These particular events were chosen because they were significant (i.e. greater than 1.0 inch, lasted more than 5-hours) and were followed by little or no measurable rainfall for 3 days.

For this study, two rain gauges were located in the City of St. Helena for the duration of the study period. Rain gauge #1 was located by the water tank on Spring Mountain Road near the Lookout Reservoir. Rain gauge #2 was located at the pump station off College Avenue.

The Theissen polygon rain gauge distribution method was used to assign rainfall amounts from each rain gauge to the respective Basins. A bisecting line was drawn between the rain gauges and effective areas represented by each gauge were drawn. Each Basin was assigned rainfall amounts in proportion to the percentage of the Basin area falling within the influence area of each rain gauge. The rain gauge distribution used in this study is indicated in Table 2.2.

Table 2.2
Rain Gauge Weighting for Each Basin

Basin #	% Rain Gauge #1	% Rain Gauge #2
1	90%	10%
2	100%	0%
3	60%	40%
4	0%	100%
5	0%	100%
6	0%	100%

3 BASIN FLOW ANALYSIS

Basins were monitored during a dry and wet period to determine the impact of wet weather on the system. Dry weather flows were monitored for approximately one week from September 11, 1999 through September 21, 1999. Wet weather flows were monitored for four (4) weeks from February 5, 2000 through March 7, 2000.

3.1 Net Dry Weather Flows

Dry weather monitoring took place in September after a long dry period with little or no rain. The net average-day dry weather flow for each Basin is presented graphically in Figure 3.1.

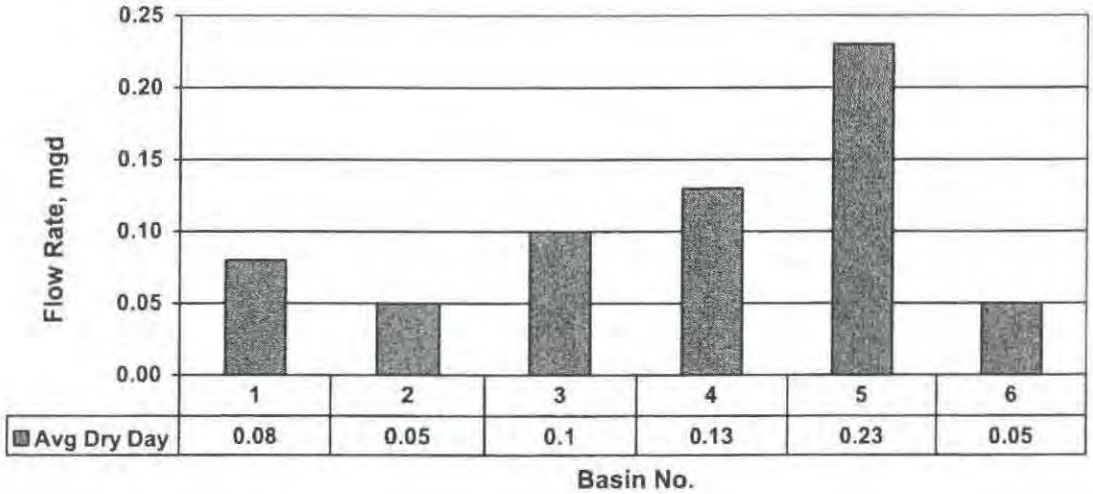

Figure 3.1 – Net Average-Day Dry Weather Flows

As shown in Table 3.1, the average-day dry weather flow ranged from 0.05 mgd which came from Basins 2 and 6 to 0.23 mgd which came from Basin 5. The combined average-day dry flows from all the Basins was 0.64 mgd.

3.2 Net Wet Weather Flow

Wet weather flows were monitored during the month of February and March, 2000 when there were multiple rain events. The storms used in this study including their dates, quantity, and duration are presented in Table 3.1.

Table 3.1
Storm Events Evaluated

Storm #	Date	Rainfall (in)		Duration (hours)
		RG 1	RG 2	
1	2/12/2000	5.22	3.55	48
2	2/22/2000	1.95	1.39	48

3.2.1 Average-Day Wet Weather Flows

To show the impact of these storm events with respect to the net average-day dry weather flow, the average-day wet weather flow (averaged over the two (2) storms) was graphed with the average-day dry flow. This graph is presented in Figure 3.2.

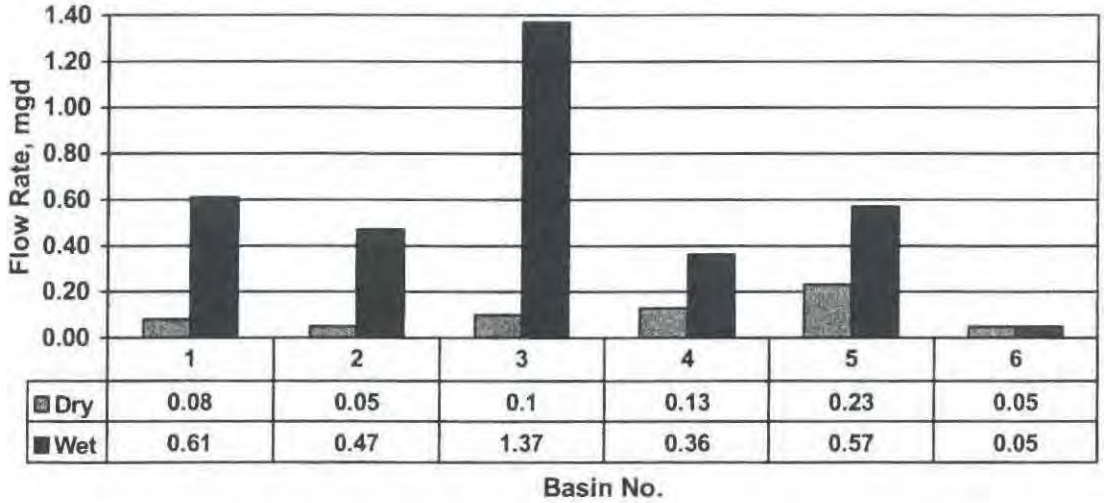

	1	2	3	4	5	6
Dry	0.08	0.05	0.1	0.13	0.23	0.05
Wet	0.61	0.47	1.37	0.36	0.57	0.05

Figure 3.2 – Net Average-Day Dry Vs Average-Day Wet Flows

ADS ENVIRONMENTAL SERVICES

As shown in Figure 3.2, the average-day wet weather flows were substantially greater then the average-day dry weather flows for Basins 1,2 and 3. This indicates that the rain had a significant effect on average-day flows. To illustrate this further, the ratio of highest average-day wet weather flow to average-day dry weather flow was calculated and is presented in Figure 3.3.

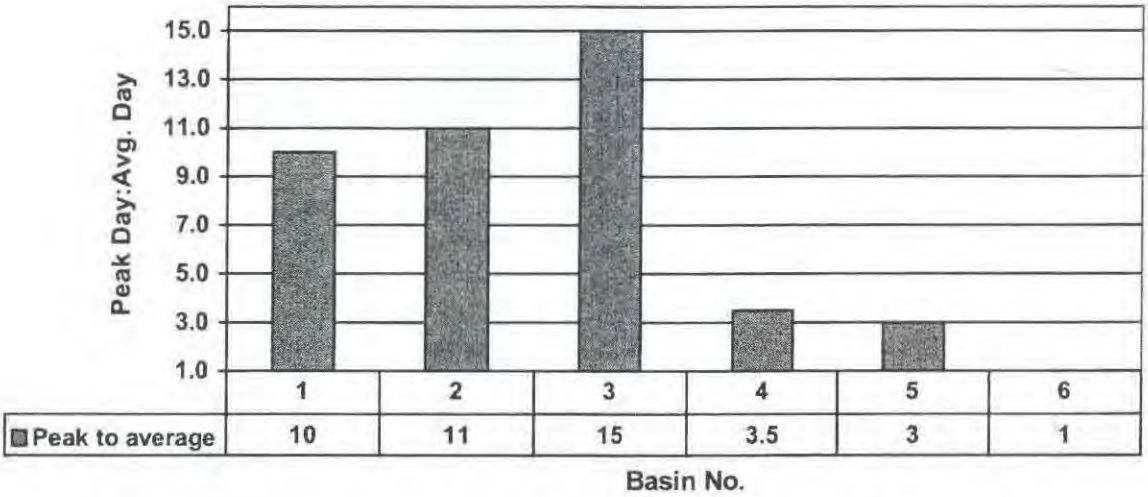

Figure 3.3 – Net Average-Day Wet to Average-Day Dry Ratio

The graph in Figure 3.3 indicates that Basins 1, 2, and 3 greatly exceed a 3:1 ratio for the wet vs. dry daily flows. The WEF manual of Practice FD-6 indicates that an average-day wet weather flow to average-day dry flow ratio that exceeds 2 to 3 is considered significant.

3.2.2 Peak-Hour Wet Weather Flows

Peak-hour wet weather flows were graphed with average-day dry flows and are presented in Figure 3.3.

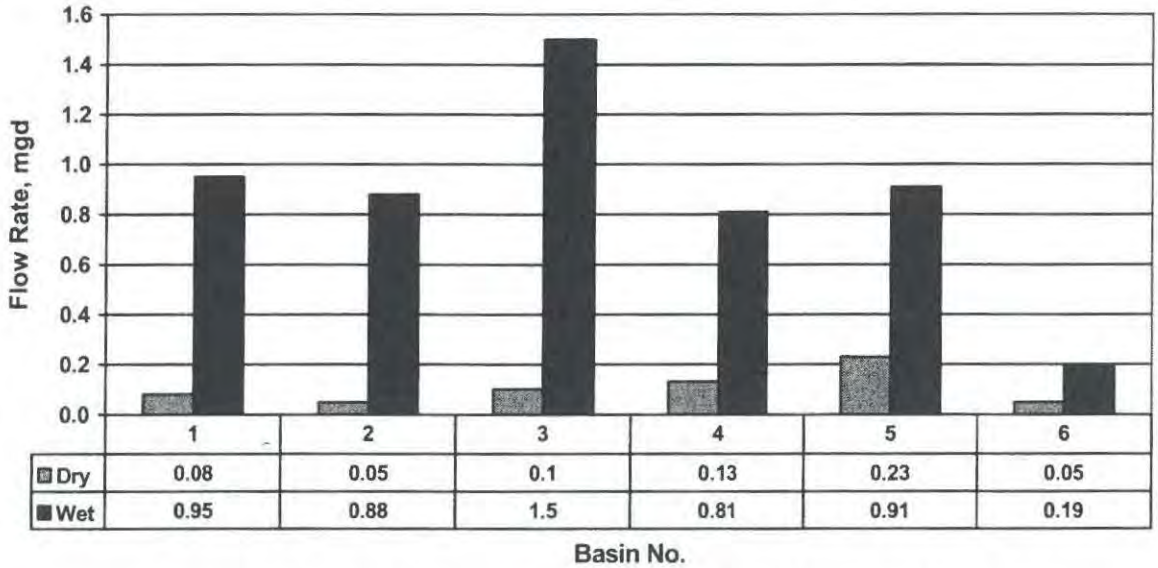

	1	2	3	4	5	6
Dry	0.08	0.05	0.1	0.13	0.23	0.05
Wet	0.95	0.88	1.5	0.81	0.91	0.19

Figure 3.4 – Net Average-Day Dry Vs Peak-Hour Wet Flows

As shown in Figure 3.4, the net peak-hour wet weather flows were substantially greater than the average-day dry weather flows for all of the Basins; with the possible exceptions of Basins 5 and 6. This indicates that the rain had a significant effect on peak-hour wet weather flows. To illustrate this further, the ratio of peak-hour wet weather to average-day dry weather flows were calculated and are presented in Figure 3.5.

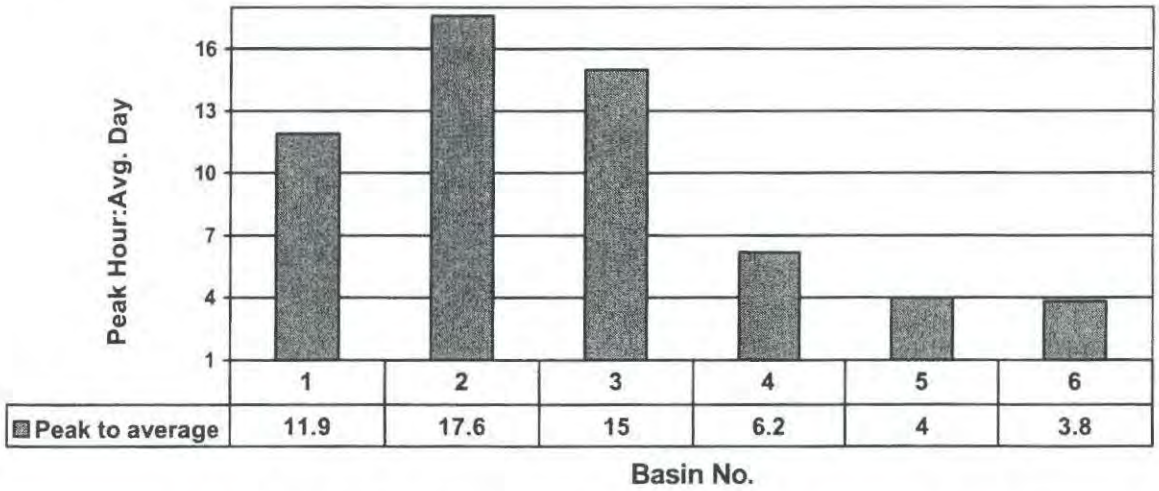

	1	2	3	4	5	6
Peak to average	11.9	17.6	15	6.2	4	3.8

Figure 3.5 - Net Peak-hour Wet to Average-day Dry Ratio

ADS ENVIRONMENTAL SERVICES

The graph in Figure 3.5 indicates that Basins 1, 2, 3 and 4 exceed a 4:1 flow ratio based on comparing net peak-hour wet weather to net average-day dry weather flows. These ratios may indicate that flow peaking factors are similarly high within portions of the respective Basins. The WEF manual of Practice FD-6 indicates that a ratio that exceeds 3 to 4 is considered significant.

3.3 Net Minimum Flows – Dry vs. Wet Periods

The minimum recorded flows (in the middle of the night – in units of mgd) during the dry period were determined for each Basin and then compared to the minimum flows recorded (in the middle of the night) early into the wet weather study period. The recorded minimum flows for each Basin are summarized in Table 3.2 for both the dry and wet periods along with the percentage increase in recorded minimum flows from the dry period to the wet period.

Table 3.2
Summary of Minumum Recorded Flows
Dry vs. Wet Periods

Basin #	Flow Min. Dry Weather (mgd)	Flow Min. Wet Weather (mgd)	Percent Flow Increase Dry to Wet Weather
1	0.01	0.06	500%
2	0.01	0.11	1000%
3	0.04	0.11	175%
4	0.07	0.12	71%
5	0.11	0.11	0%
6	0.06	0.06	0%

The above data indicates that minimum flows significantly increase in Basins 1, 2, and 3 from dry to wet weather periods. Basin 2 indicated a 10 fold increase in the minimum recorded nighttime flows from the dry to wet weather periods. These data suggest that infiltration comprises a significant portion of the overall RDII volume for these Basins.

4 RDII ANALYSIS

An analysis was performed to determine the quantity of Rain Dependent Inflow and Infiltration (RDII) produced by each Basin in the study. The analysis involved subtracting the net Average Dry Weather Flow (ADWF) from the net Wet Weather Flow (WWF) using an ADS proprietary software called Sli/icer®. Sli/icer® takes into consideration weekday or weekend flows and accounts for infiltration immediately prior to a storm. Compensation for the pre-storm elevated flows is termed precompensation. The process of breaking down the hydraulic impact on a Basin associated with rainfall is termed decomposition. The Sli/icer® output for Basin 2 during the 02/22/00 storm event is depicted in Figure 4.1.

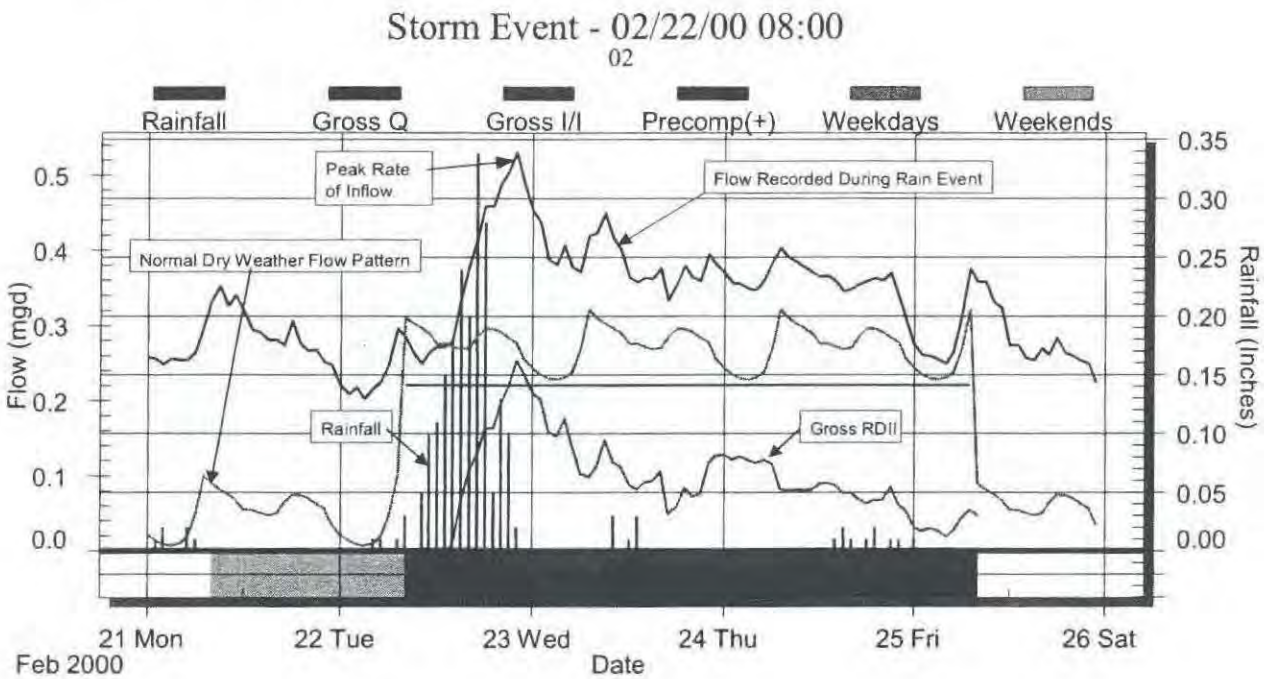

Figure 4.1
Basin 2 Decomposition Hydrograph

The graph in Figure 4.1 shows that Basin 2 produced a significant volume of RDII during the storm event beginning 02/12/00. In Figure 4.1, the gray highlighted time

period prior to the storm period is the period during which precompensation is determined. The light purple period is the storm period. The two darker purple periods following the storm period are the recovery periods R1 and R2. Each of these periods is set at 24 hours in duration unless they are extended or reduced due to factors including longer storm period, short duration to subsequent storms (reduced R1 and R2), and short duration from previous storms (reduced precompensation period).

The Sli/icer® hydrographs for each Basin during the two storm events are included in Appendix A.

4.1 Net RDII Analysis

Net RDII from each Basin was analyzed during each of the two (2) storm events. The RDII was broken down into RDII occurring during the storm event and additional RDII occurring during the recovery periods, R1 and R2. The RDII volume for the storm events was calculated and is presented in Table 4.1.

Table 4.1
Summary of Net RDII per Storm Event

Basin No.	Storm Event 1 (2/12/00)		Storm Event 2 (2/22/00)		Storm Period RDII As a Percent of Total Event RDII
	Net RDII Storm Period (mg)	Net RDII R1 + R2 (mg)	Net RDII Storm Period (mg)	Net RDII R1 + R2 (mg)	
1	0.68	0.37	0.13	0.25	49%
2	0.31	0.05	0.12	0.16	64%
3	1.01	0.54	0.49	–	65%
4	0.15	0.04	0.12	0.33	53%
5	0.11	0.17	0.03	0.04	41%
6	0.05	0.05	0.05	0.25	33%
Sub Tot	2.31	1.22	0.94	1.03	57%
Total	3.53		1.97		

As shown in Table 4.1 Storm No. 1 had the greatest impact in terms of Net RDII. Basins 1, 2, and 3 generally produced the largest quantity of RDII (up to 87% of the

RDII volume during storm 1) and Basins 4, 5 and 6 produced the smallest quantity of RDII.

A review of the net flow responses for each Basin during the study period indicates that both the inflow and infiltration components of RDII are prevalent. Based on the percentages of storm vs. total event volumes in Basins 1, 2, 3 and 4 during storm 1, it appears that the RDII component shifts significantly toward inflow with increasing rainfall volume. It is possible that inflow will predominate in these Basins during any storm of significant volume that is accompanied by saturated antecedent soil conditions (as is the case for storm 1).

The 2-storm average Net RDII (in mg per inch of rain) for each Basin is presented graphically in Figure 4.2.

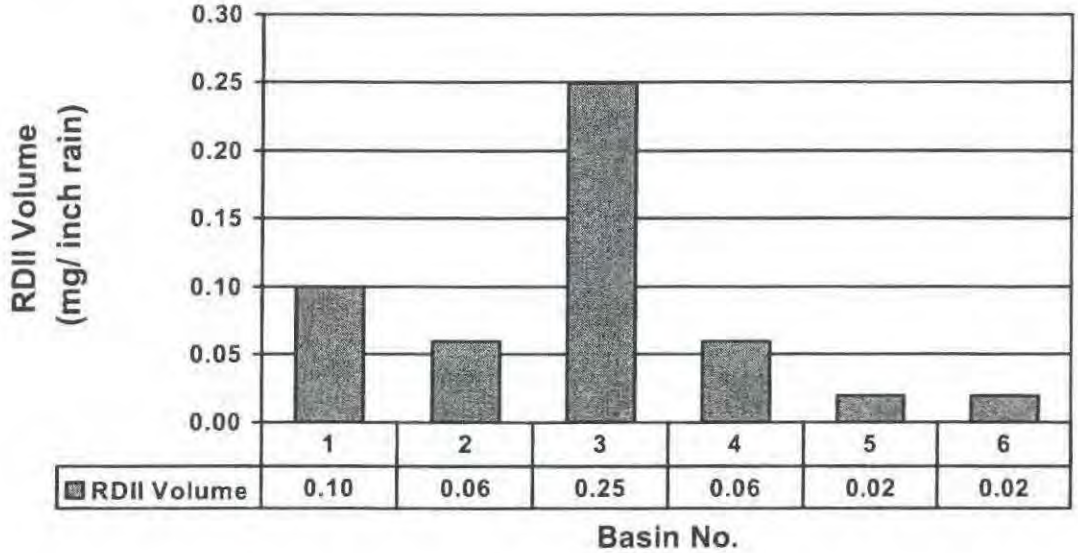

Figure 4.2 – Net RDII Volume (2-storm average)

As shown in Figure 4.2, the net average RDII from the two storm events (in mg per inch rain) ranged from 0.02 mg from Basins 5 and 6 to 0.25 mg from Basin 3. This graph shows that, on average, in excess of 80-percent of the net RDII comes from Basins 1, 2 and 3.

4.2 Q vs. i diagrams

There is generally a linear relationship between volume of rainfall and net RDII in each basin. This correlation between net flows in each Basin to volume of rainfall can be depicted graphically and is termed a Q vs. i diagram. The Q vs. i diagram for Basin 3 is presented in Figure 4.3.

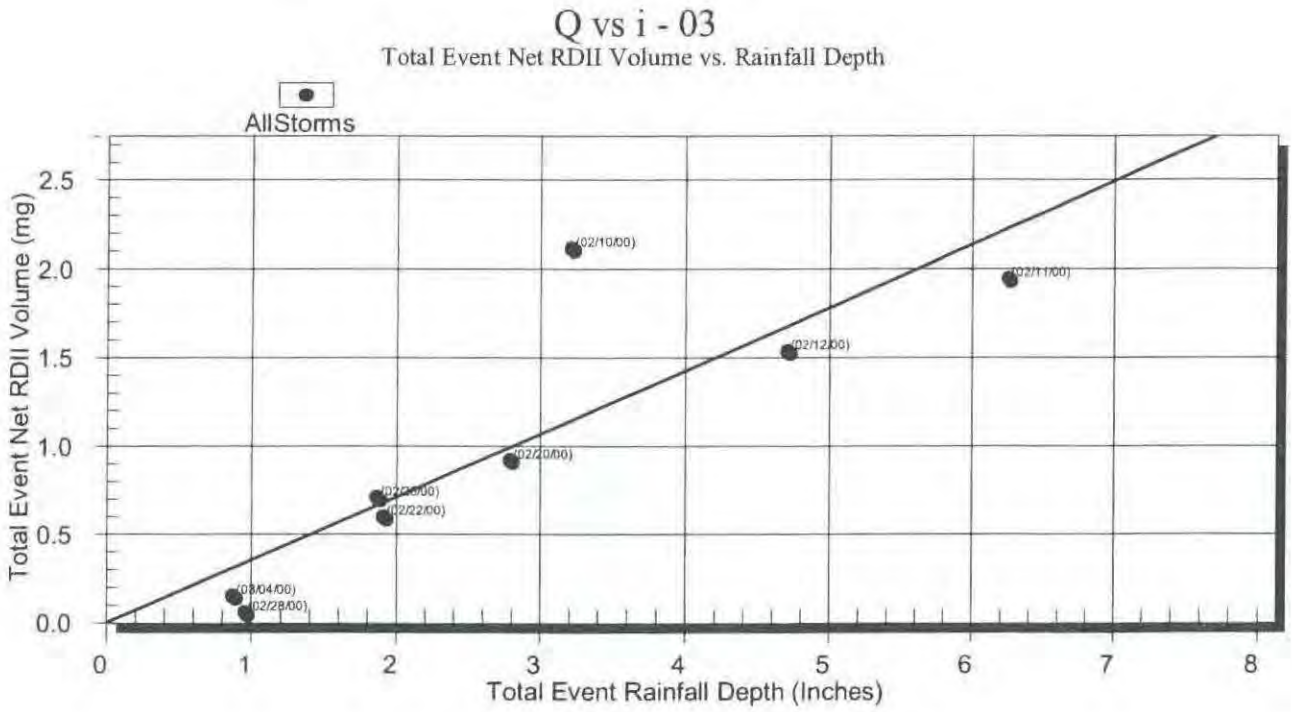

Figure 4.3 – Q vs. i Diagram for Basin 3

The slope of the best fit line fitted to the (Q,i) data points is an indication of how "leaky" the Basin is. In certain cases where the rainfall response in a Basin is low, this linear relationship to increasing RDII with increasing rainfall may be less discernable. This less defined linear relationship is evident for Basins 4, 5, and 6. The Q vs. i diagram is often a very useful tool for determining degree of success of rehabilitation efforts. Q vs. i diagrams for each Basin are included in Appendix B.

4.3 Normalized RDII Analysis

To enable a comparison of RDII between Basins of differing sizes and piping lengths (and diameters), the net RDII volumes for each Basin were also normalized by dividing each Basin's net RDII value by the lineal footage of pipe and average pipe diameter within the Basin to yield RDII values in units of gallons/ inch (diameter)-mile. The RDII values were further normalized by dividing each Basin's computed Net RDII for each storm by the inches of rainfall observed during the storm. This allowed a direct comparison of Net RDII between Basins using a common basis using units of gallons/ inch-diameter per mile per inch-rain. A summary of the normalized Net RDII in each Basin during each storm event is presented in Table 4.2.

As shown in Table 4.2, the normalized RDII ranged from 320 to as high as 10,900. The normalized net RDII values (averaged over the two storm events) for each Basin are depicted in Figure 4.4.

Table 4.2
Summary of Normalized RDII per Storm

Basin #	Normalized RDII (gal/ idm-inch rain)		
	Storm 1	Storm 2	Average
1	5880	2950	4415
2	3130	3080	3105
3	8580	10900	9740
4	1820	3510	2665
5	1210	690	950
6	320	870	595
		Total Average	3578

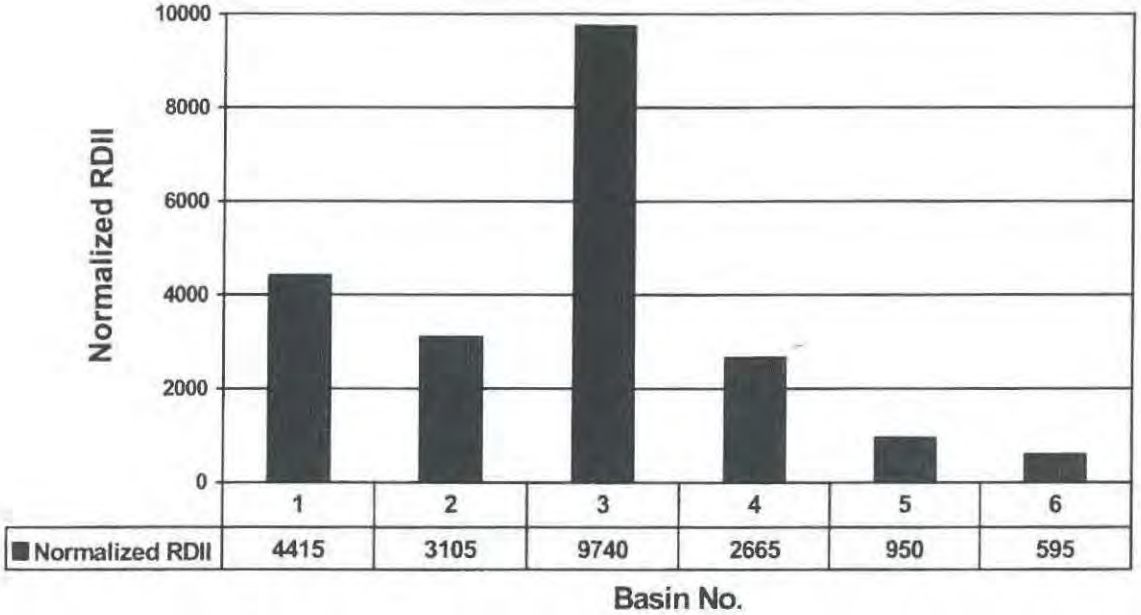

Figure 4.4 – Normalized RDII (gal / idm-inch rain)

As shown graphically in Figure 4.4, Basins 1, 2, 3 and 4 produce the highest normalized RDII on an average basis. It should be noted that these Basins also produced the highest average net RDII volume for the two storms studied.

5 MONITORING SITE HYDRAULIC ANALYSIS

A hydraulic analysis was performed at each flow monitoring site using gross flows to evaluate the pipeline in the immediate area around the flow monitor. The basis of this evaluation was to compare the peak-hour wet to average-day dry ratios and to compare the depth-of-flow to the diameter (d/D) of the pipe throughout the study period.

5.1 Peak-hour Wet to Average-Day Dry Flow Evaluation

The dry and wet weather gross flows were evaluated at each monitor location. These flows were summarized for the study period and are presented in Table 5.1.

Table 5.1
Gross ADWF and WWF Peak Hour

Monitor No.	Gross ADWF Average-day (mgd)	Gross 'WWF Peak-hour (mgd)
SH 1	0.08	1.0
SH 2A	0.02	0.4
SH 2B	0.05	0.5
SH 3A	0.14	1.5
SH 3B	0.06	0.8
SH 3C	0.14	0.9
SH 4	0.34	3.6
SH 5	0.58	3.6
SH 6	0.62	3.5

Ratios of gross peak-hour WWF to gross average-day dry weather flows were determined from this data. The peak to average flow ratios are presented in Figure 5.1.

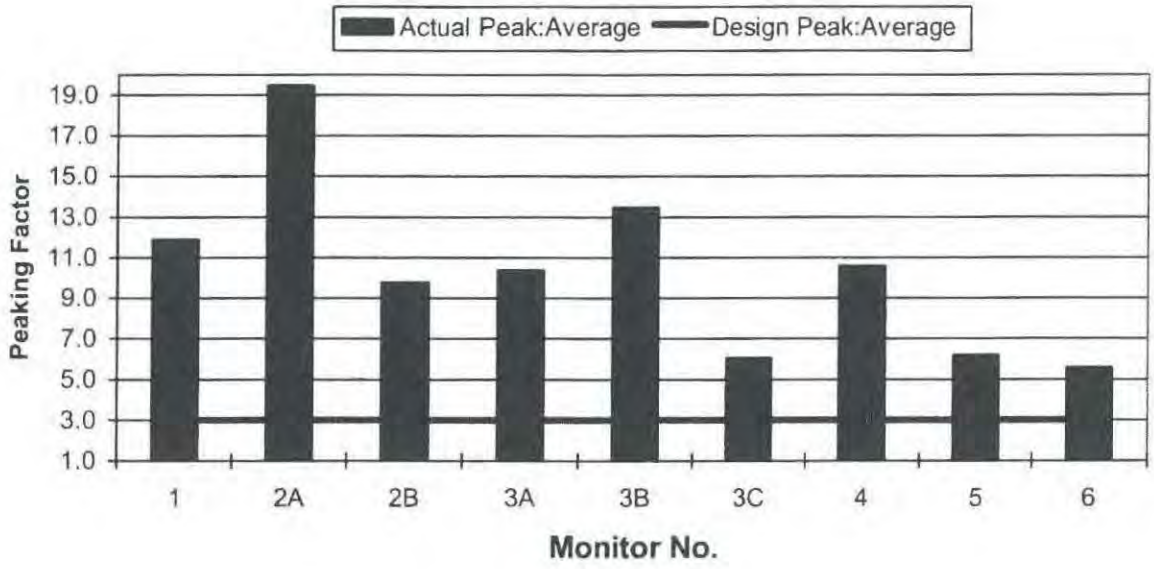

Figure 5.1 - Peak to Average Ratio (Actual Vs Typical Design)

These flow ratios or peaking factors ranged from 5.6 to 19.5. The pipelines associated with all of the monitors exhibited peaking factors that exceeded 3.0 which is commonly used as a design peaking factor.

5.2 d/D Ratio Evaluation

Sewers are commonly designed to handle a depth-of-flow over Diameter-of-pipe (d/D) ratio of 0.75 at peak flows. When 0.75 is exceeded, this may indicate that the pipeline has exceeded its design capacity. To illustrate this, the depth-of-flow hydrograph for flow monitor SH 3A is shown in Figure 5.2.

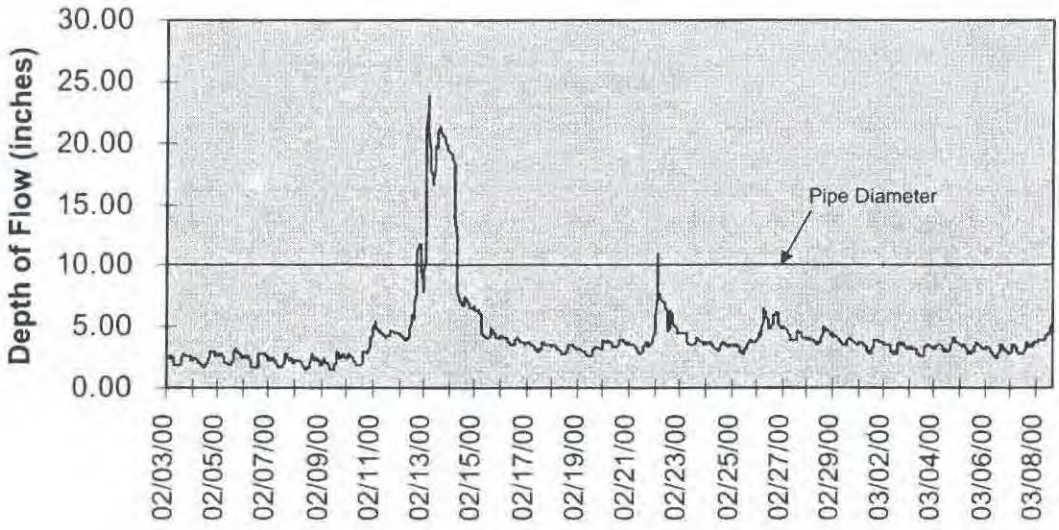

Figure 5.2 – Depth-of-Flow Hydrograph for Monitoring Site SH 3A

The depth-of-flow hydrograph in Figure 5.2 shows that the pipe associated with Monitor SH 3A was surcharged during the largest storm period (storm 1) and very briefly during storm 2. ADS evaluated the depth-of-flow hydrographs for each Basin. . The peak d/D ratios for each monitor location are graphically presented in Figure 5.3.

Figure 5.3 - d/D Ratio Vs Typical Design

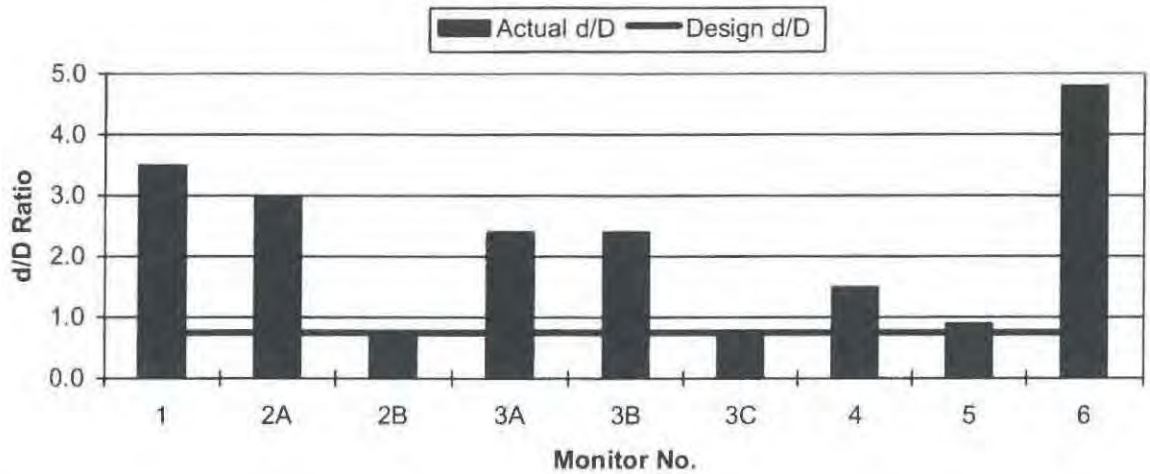

The d/D ratio during the study period significantly exceeded 0.75 for flow monitoring sites SH 1, SH 02A, SH 3A, SH 3B, SH 4, and SH 6. In fact for these sites the d/D ratio exceeded 1.0, which means the pipeline was in surcharge conditions with wastewater traveling up the manhole. This may indicate that the pipelines in the immediate area of the flow monitors listed above have exceeded their design capacity due to the backup condition; particularly during the 5-inch storm event on 2/12/00.

Although the Monitor for Basin 6 indicated a high peak d/D condition, the d/D ratio was well within the normal range for the study duration with exception to an apparent backup condition on Friday, 2/11/00, in the evening and again on Saturday, 2/26/00, just before noon. The City may wish to investigate the cause of these isolated backup conditions.

The Depth-of-flow hydrographs for each of the 9 monitoring sites are included in Appendix C.

5.3 Scattergraph Analysis

The flow data for each Basin monitor were reviewed for signs of possible hydraulically anomalous behavior caused by flow restrictions. This included a review of scattergraph

plots of velocity versus depth data points that are instructive in identifying such hydraulic anomalies.

Review of these scattergraphs suggests that possible SSOs may have occurred at or immediately downstream of monitor SH 1 between the evening of 2/13/00 and the morning of 2/14/00 as well as monitor SH 3A in the late afternoon and evening of 2/14/00. This is particularly notable considering that these monitoring sites were among the five sites exhibiting peaking factors in excess of ten (10).

With exception to the above discussed system capacity limitations, no significant hydraulic anomalies (e.g. blockages, displaced pipes, or other unusual hydraulic behavior) were evident based on this review.

The Scattergraphs for each of the 9 monitoring sites are included in Appendix D.

6 CONCLUSIONS AND RECOMMENDATIONS

6.1 Conclusions

RDII was evaluated for each Basin during the two primary storm events. The following evaluation parameters were used for this study:

- Basin Peaking Factor
- Basin total volume of RDII per storm event
- Basin normalized RDII (average of 2 storms)
- Basin monitor site hydraulic capacity

The total volume of RDII was provided as a means of determining impact on overall treatment and transport. The net peaking factor, normalized RDII, and d/D parameters were used to priority rank the study basins for future assessment and possible rehabilitation work. A summary of the net Peaking Factor, net RDII, and d/D evaluation parameters is provided in Table 6.1.

Table 6.1
Summary of RDII and Flow Analysis Parameters

Basin No.	Net Flow Peaking Factor	Normalized Net RDII (gal/idm-inch rain)	Peak d/D Ratio
1	11.9	4415	3.5
2	17.6	3105	3.0
3	15.0	9740	2.4
4	6.2	2665	1.5
5	4.0	950	0.9
6	3.8	595	4.8*

*- high d/D likely caused by hydraulic backup condition from downstream

1. Each of the above RDII factors yield Basins 1, 2, and 3 as the highest priority Basins for future evaluation. It is estimated that Basins 1,2 and 3 are contributing about 84% of the study RDII volume while constituting about 36% of the total dry weather flows.

2. Based on evaluating hydraulic capacity (in terms of d/D) of the flow monitoring sites during the largest storm event (5 inches), it appears that flow monitoring sites SH 1, SH 2A, SH 3A and SH 3B are the most susceptible to future SSOs resulting from RDII.

6.2 Recommendations

Based on the analysis discussed above, the City of St. Helena is experiencing significant wet weather inflow and infiltration (RDII) in portions of its sanitary sewer service area. This RDII is causing a reduction in sanitary sewer capacity that could lead to future sanitary sewer overflows.

To reduce the quantity of RDII entering the system, defects must be located and repaired. The process of locating, quantifying and analyzing these defects using a cost benefit analysis is called a Sanitary Sewer Evaluation Survey (SSES). An SSES can include the following:

- Smoke Testing
- Flow Isolations
- Manhole Inspections
- CCTV Inspections
- Source Defect Analysis
- Cost Benefit Analysis

The following SSES work is recommended for the Basins analyzed in this Study and summarized in Table 6.2:

Table 6.2
Recommended SSES

Basin No.	Smoke Testing	Flow Isolation	Manhole Inspections	Source Defect/ Cost Benefit Analysis
1	X	X	X	X
2	X	X	X	X
3	X	X	X	X
4		X		X
5				
6				

Short Term Recommendations:

1. Perform Smoke Testing on Basins 1, 2, and 3.

   The identified Basins would likely benefit from this type of analysis since the response and recovery signatures of these Basins during rain events suggest inflow is a significant factor influencing overall RDII during heavy rain events. Smoke testing represents a relatively inexpensive means by which to quickly discover often substantial points of inflow caused by factors including but not limited to illegal storm drain connections (e.g. downspouts, area drains, uncapped service lines, faulty manhole seals, illicit catch Basin connections, etc.).

2. Conduct Flow Isolations within Basins 1, 2, 3 and 4.

   This type of analysis helps to isolate segments of Basin piping that are the primary contributors to infiltration. Flow isolations are typically beneficial in Basins suspected of prolonged infiltration or increased base infiltration during the wet season.

3. Conduct T.V. Inspections

Hydraulically clean and perform T.V. inspections on areas identified as critical during the performance of smoke testing and flow isolations. This task typically consists of examining 10 – 50% of the area previously tested.

Long-Term Recommendations:

1. Conduct Long-Term Flow Monitoring.

Install permanent (and telemetered) flow monitoring devices to obtain long-term flow data for the purposes of trend analysis, verification of rehabilitation efforts, and to provide the basis for on-going investigations and maintenance efforts. It is recommended that the system be divided into 30,000 to 40,000 linear foot Basins. Consequently, up to three (3) monitors would be required.

As an option to the installation of permanently installed and telemetered flow monitors, the City could perform comprehensive temporary flow monitoring studies approximately every 2-3 years depending on the amount of rehabilitation performed. This will assist in focusing SSES and rehabilitation efforts on an annual basis.

2. Implement a Comprehensive Infrastructure Management System

It is recommended the City obtain an electronic infrastructure management system for tracking inventory, condition assessment of infrastructure, and work order management. This could be the primary tool with which to track collection system rehabilitation success in terms of RDII reduction.

This type of system can be linked to a GIS system and hydraulic models to assist City personnel in planning, engineering, and maintenance activities.

This system could also be expanded to include storm drains, water system, streets, pavement management, signs, parts inventory, and fleet and facility management.

Appendix A

RDII Analysis Sli/i cer® Hydrographs

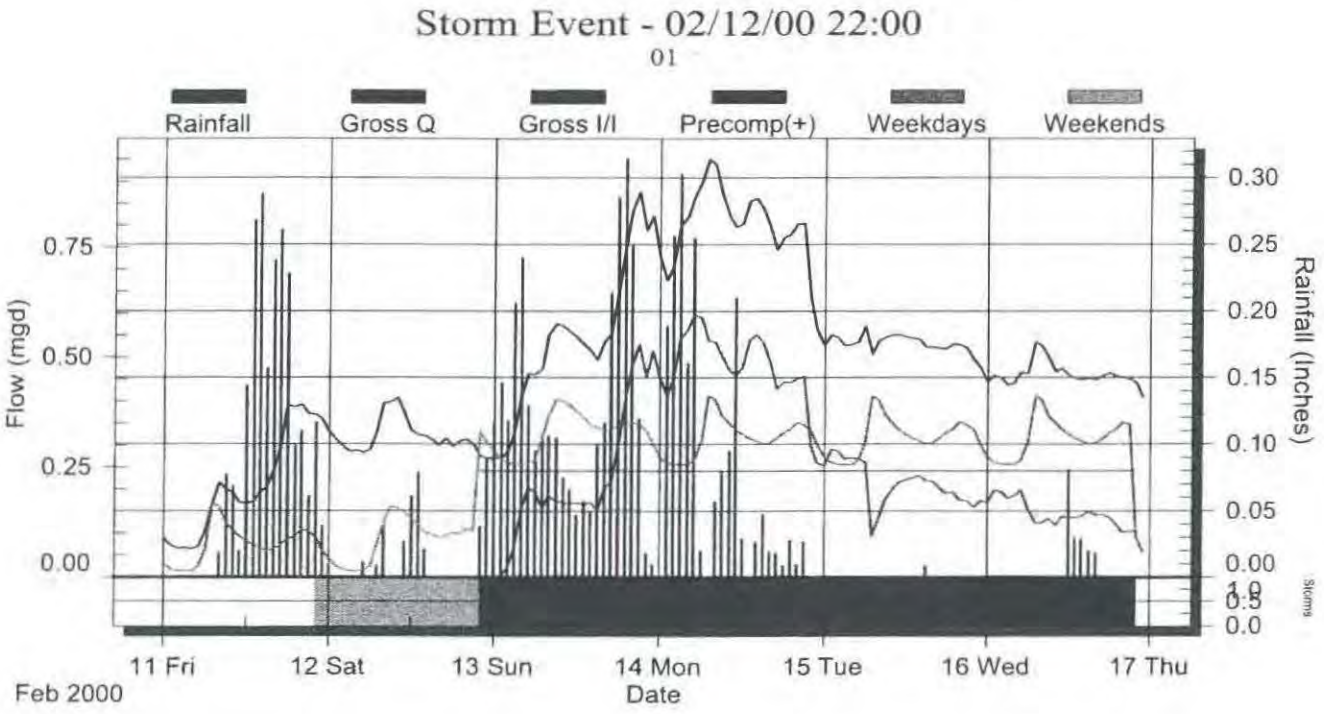
Storm Event - 02/12/00 22:00
01
Rainfall
Gross Q
Gross I/I
Precomp(+)
Weekdays
Weekends
Flow (mgd)
0.75
0.50
0.25
0.00
Rainfall (Inches)
0.30
0.25
0.20
0.15
0.10
0.05
0.00
Storms
1.0
0.5
0.0
11 Fri
12 Sat
13 Sun
14 Mon
15 Tue
16 Wed
17 Thu
Feb 2000
Date

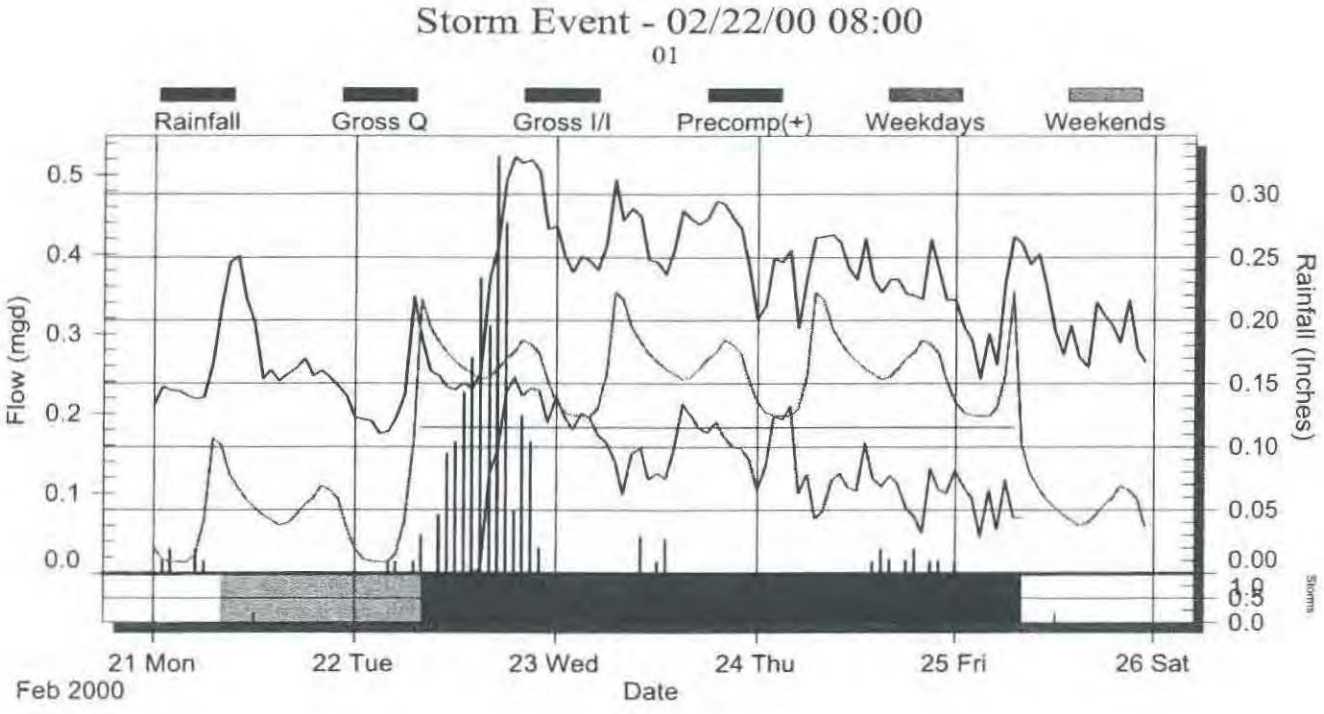
Storm Event - 02/22/00 08:00
01
Rainfall
Gross Q
Gross I/I
Precomp(+)
Weekdays
Weekends
Flow (mgd)
0.5
0.4
0.3
0.2
0.1
0.0
Rainfall (Inches)
0.30
0.25
0.20
0.15
0.10
0.05
0.00
Storms
1.0
0.5
0.0
21 Mon
22 Tue
23 Wed
24 Thu
25 Fri
26 Sat
Feb 2000
Date

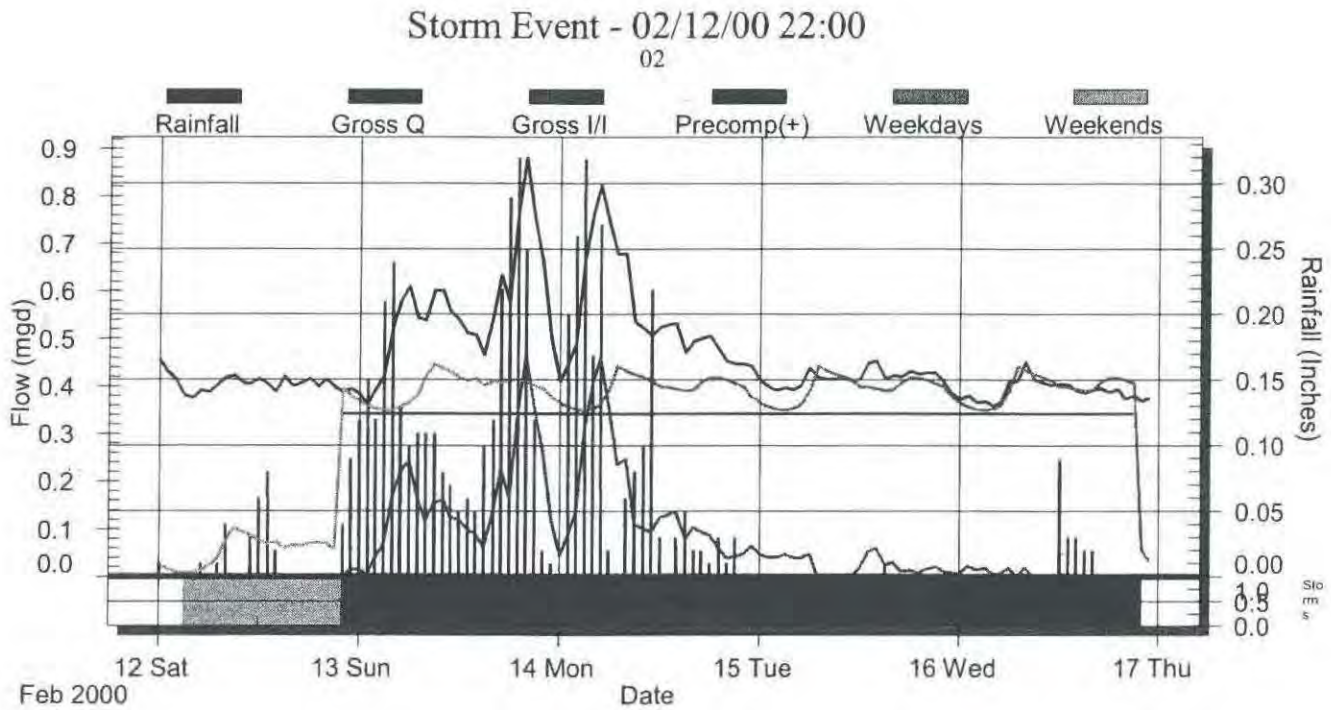
Storm Event - 02/12/00 22:00
02
Rainfall
Gross Q
Gross I/I
Precomp(+)
Weekdays
Weekends
Flow (mgd)
Rainfall (Inches)
12 Sat
13 Sun
14 Mon
15 Tue
16 Wed
17 Thu
Feb 2000
Date

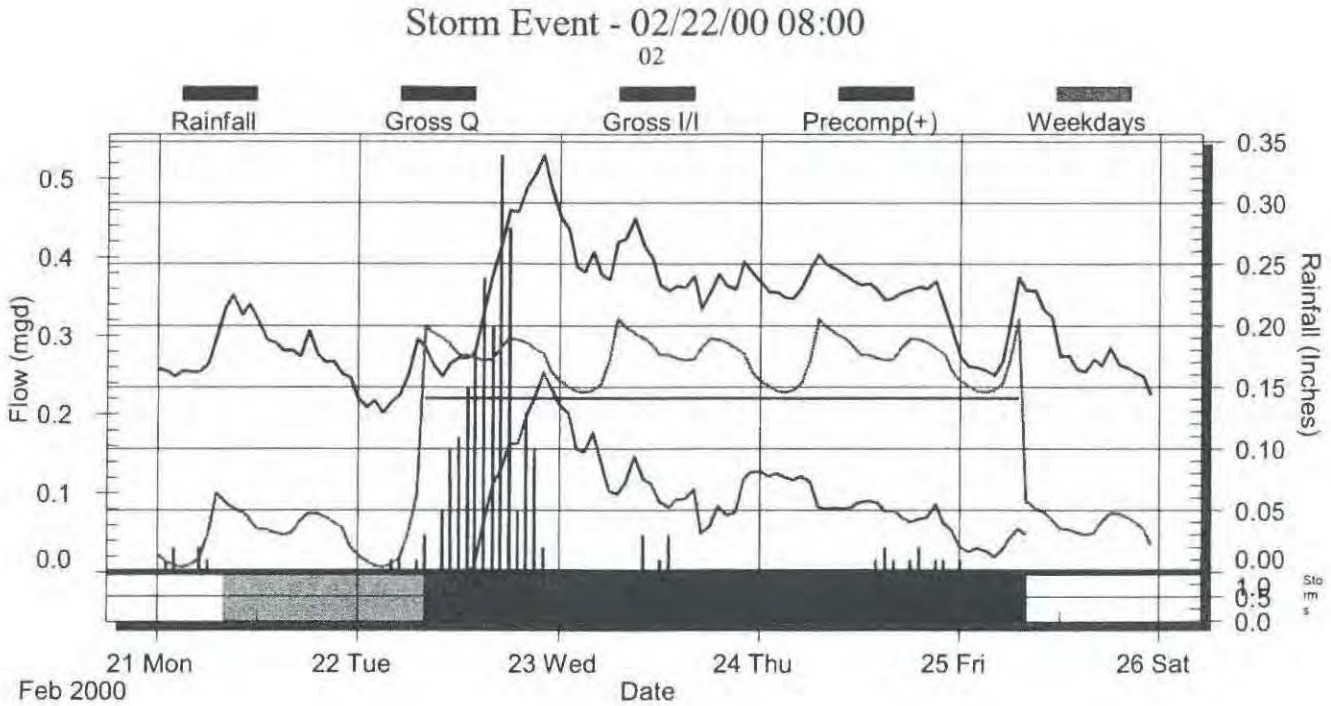
Storm Event - 02/22/00 08:00
02
Rainfall
Gross Q
Gross I/I
Precomp(+)
Weekdays
Flow (mgd)
Rainfall (Inches)
21 Mon
22 Tue
23 Wed
24 Thu
25 Fri
26 Sat
Feb 2000
Date

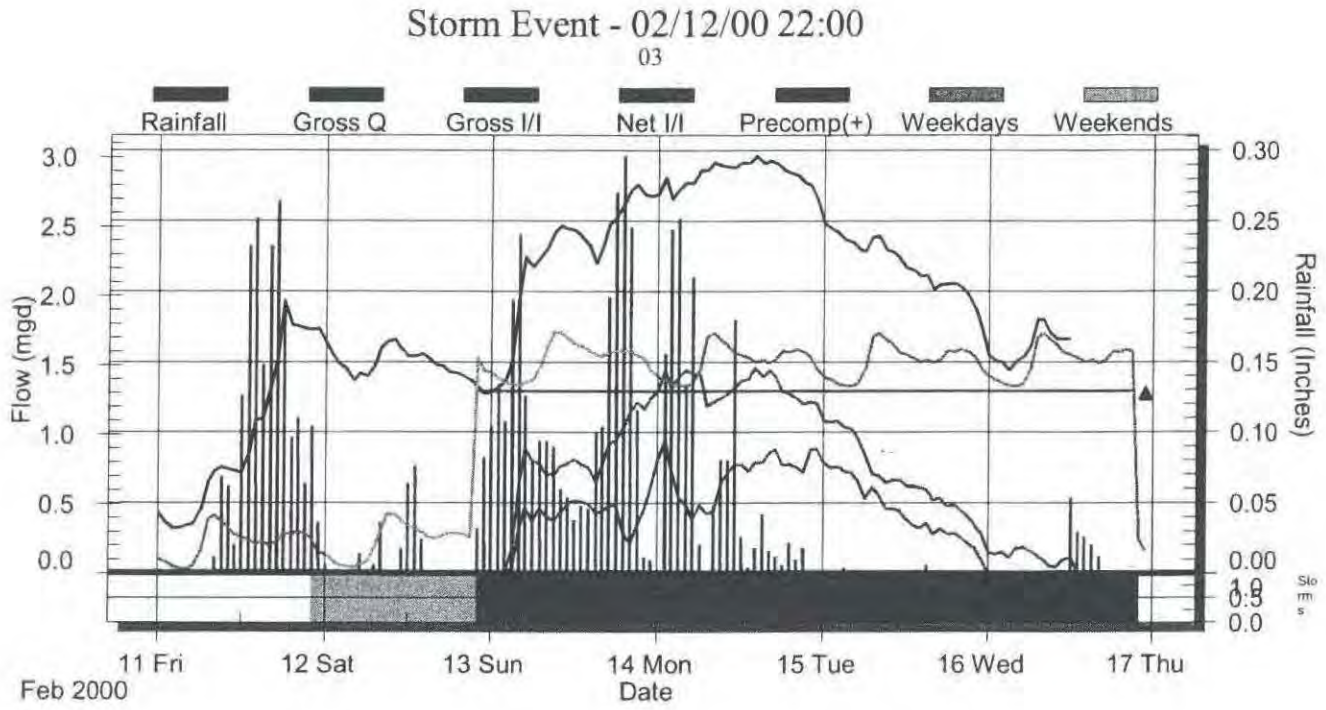
Storm Event - 02/12/00 22:00
03
Rainfall
Gross Q
Gross I/I
Net I/I
Precomp(+)
Weekdays
Weekends
Flow (mgd)
Rainfall (Inches)
11 Fri
12 Sat
13 Sun
14 Mon
15 Tue
16 Wed
17 Thu
Feb 2000
Date

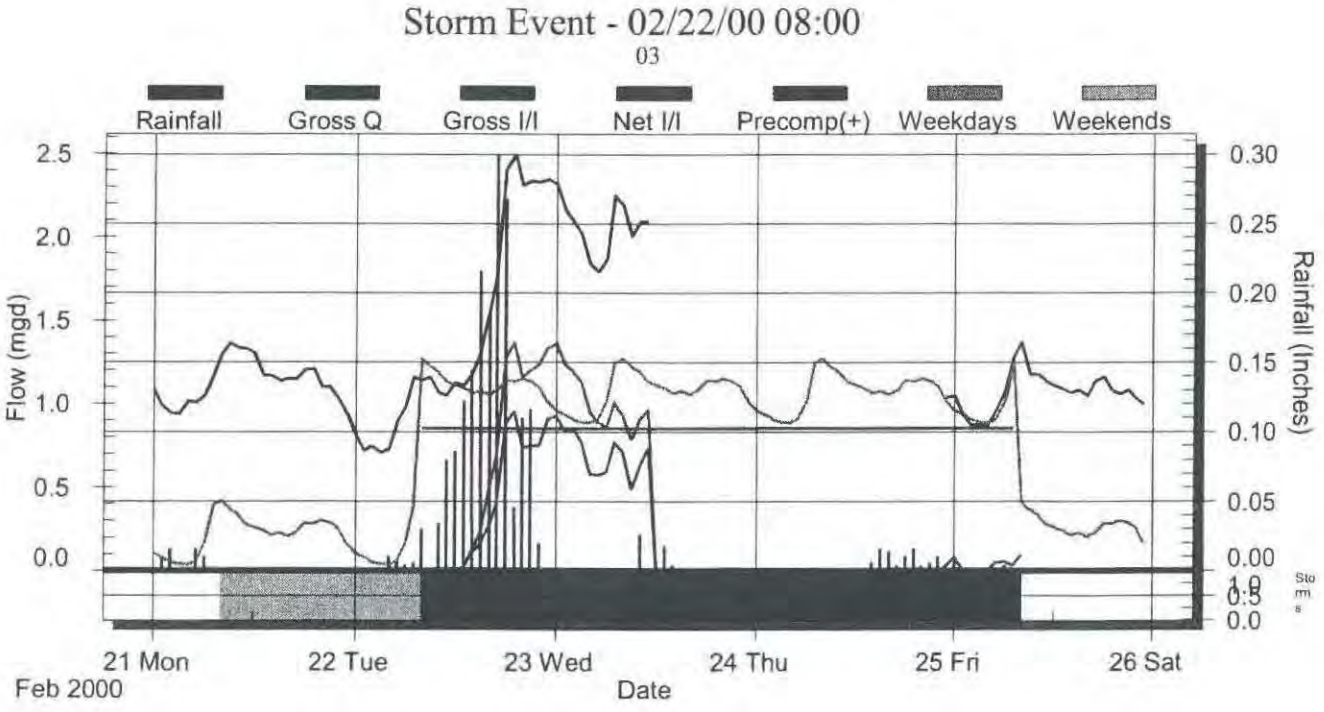
Storm Event - 02/22/00 08:00
03
Rainfall
Gross Q
Gross I/I
Net I/I
Precomp(+)
Weekdays
Weekends
Flow (mgd)
Rainfall (Inches)
21 Mon
22 Tue
23 Wed
24 Thu
25 Fri
26 Sat
Feb 2000
Date

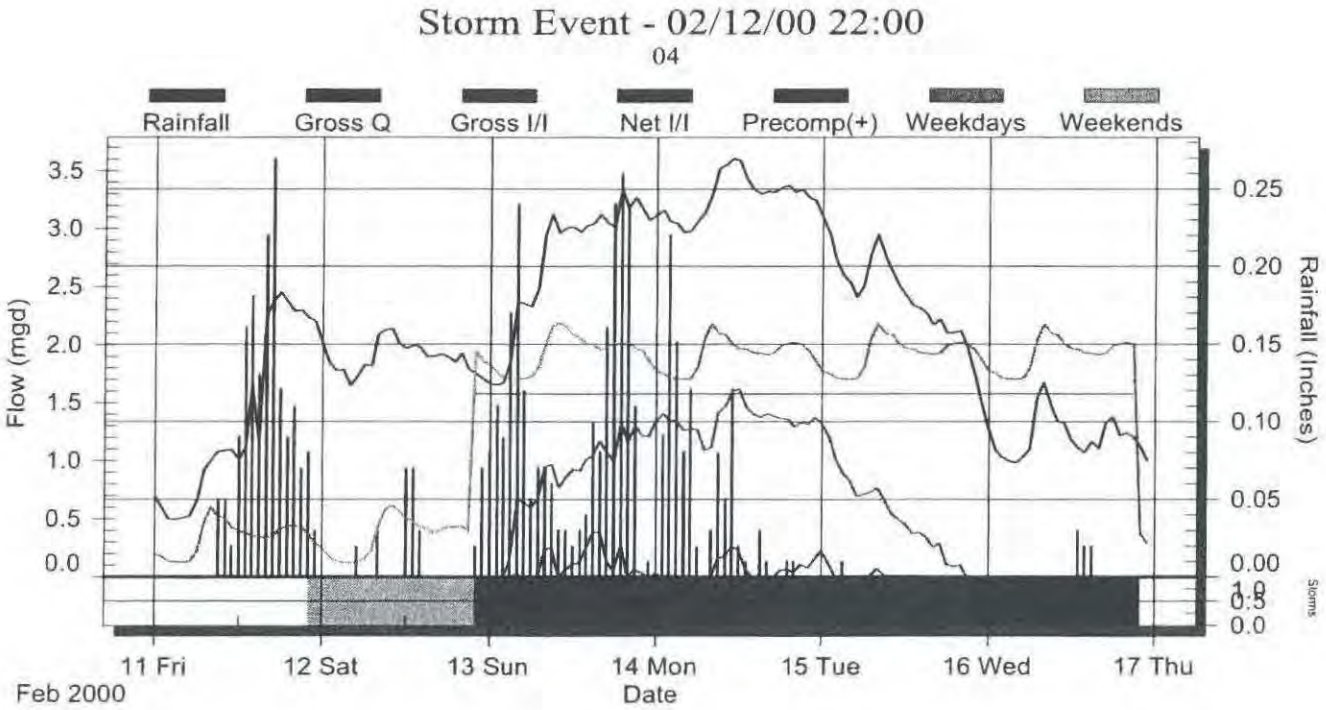
Storm Event - 02/12/00 22:00
04
Rainfall
Gross Q
Gross I/I
Net I/I
Precomp(+)
Weekdays
Weekends
Flow (mgd)
Rainfall (Inches)
Storms
11 Fri
12 Sat
13 Sun
14 Mon
15 Tue
16 Wed
17 Thu
Feb 2000
Date

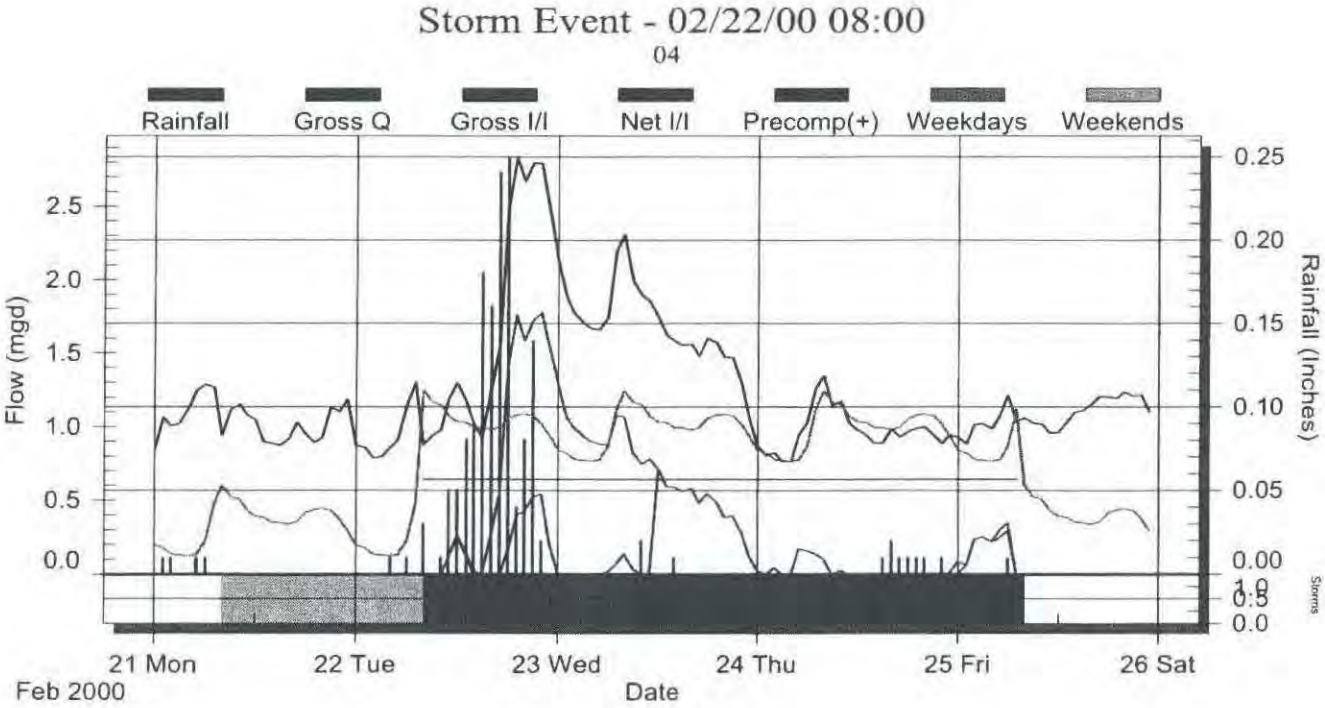
Storm Event - 02/22/00 08:00
04
Rainfall
Gross Q
Gross I/I
Net I/I
Precomp(+)
Weekdays
Weekends
Flow (mgd)
Rainfall (Inches)
Storms
21 Mon
22 Tue
23 Wed
24 Thu
25 Fri
26 Sat
Feb 2000
Date

Storm Event - 02/12/00 22:00

05

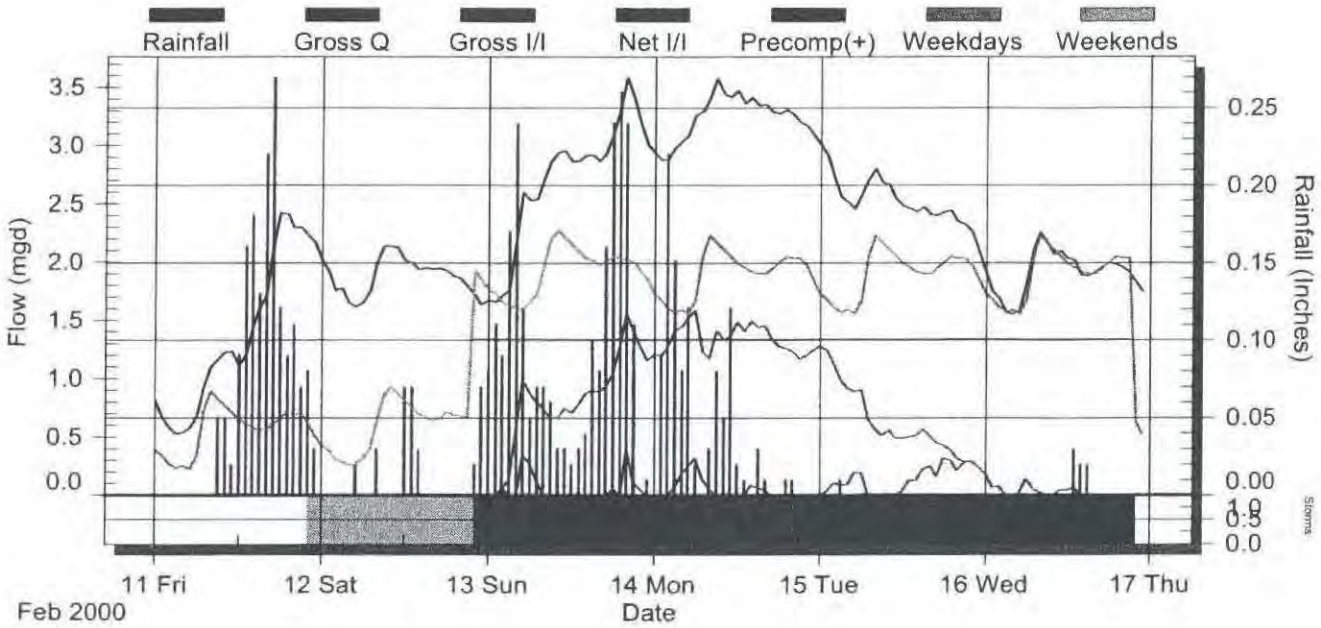

Storm Event - 02/22/00 08:00

05

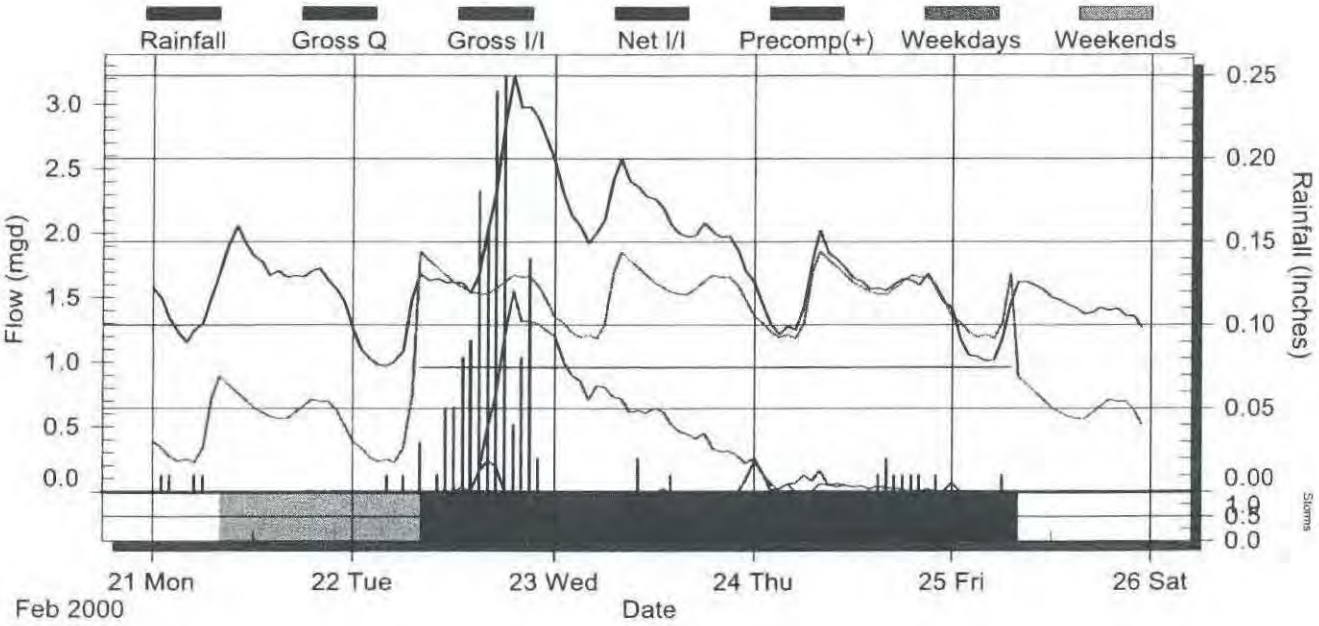

Storm Event - 02/12/00 22:00

06

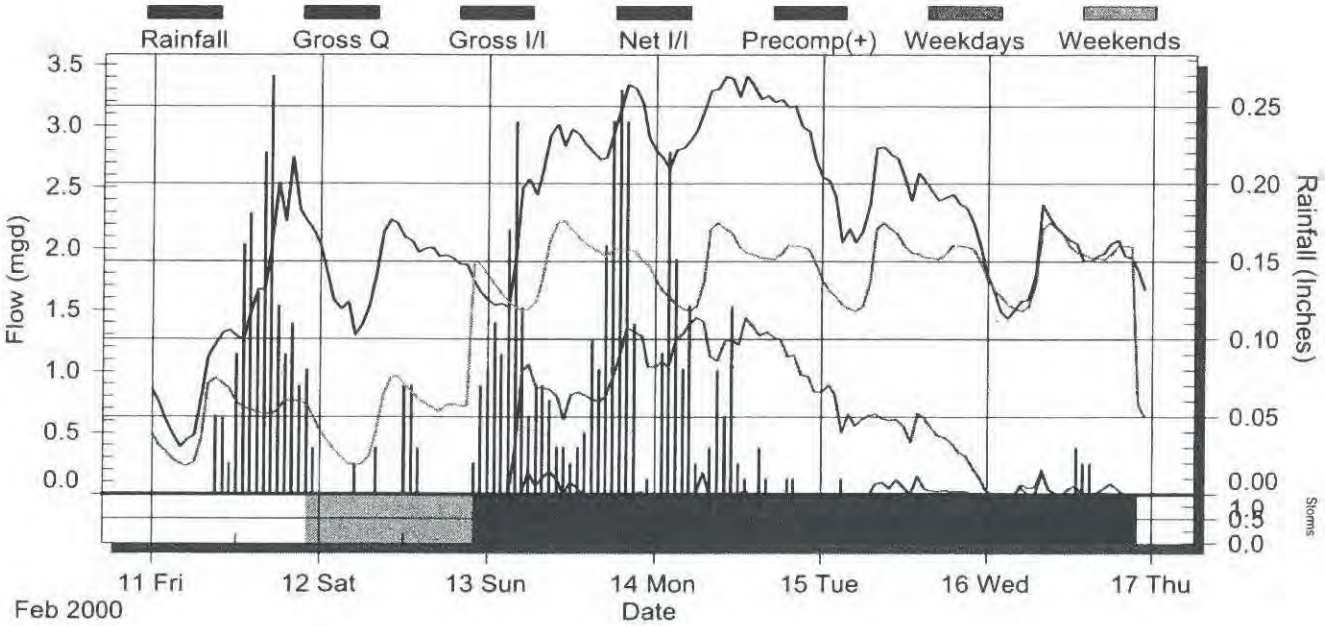

Storm Event - 02/22/00 08:00

06

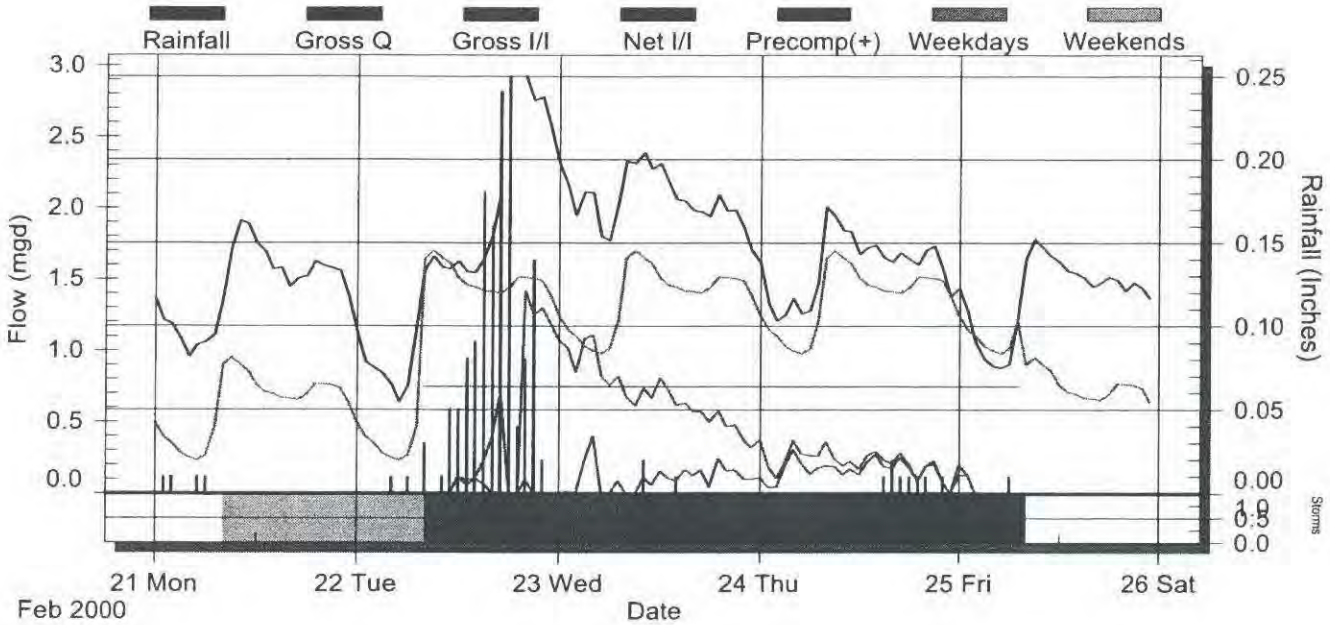

Appendix B

Q vs. i Diagrams

City of St. Helena

Q vs. i for All Basins

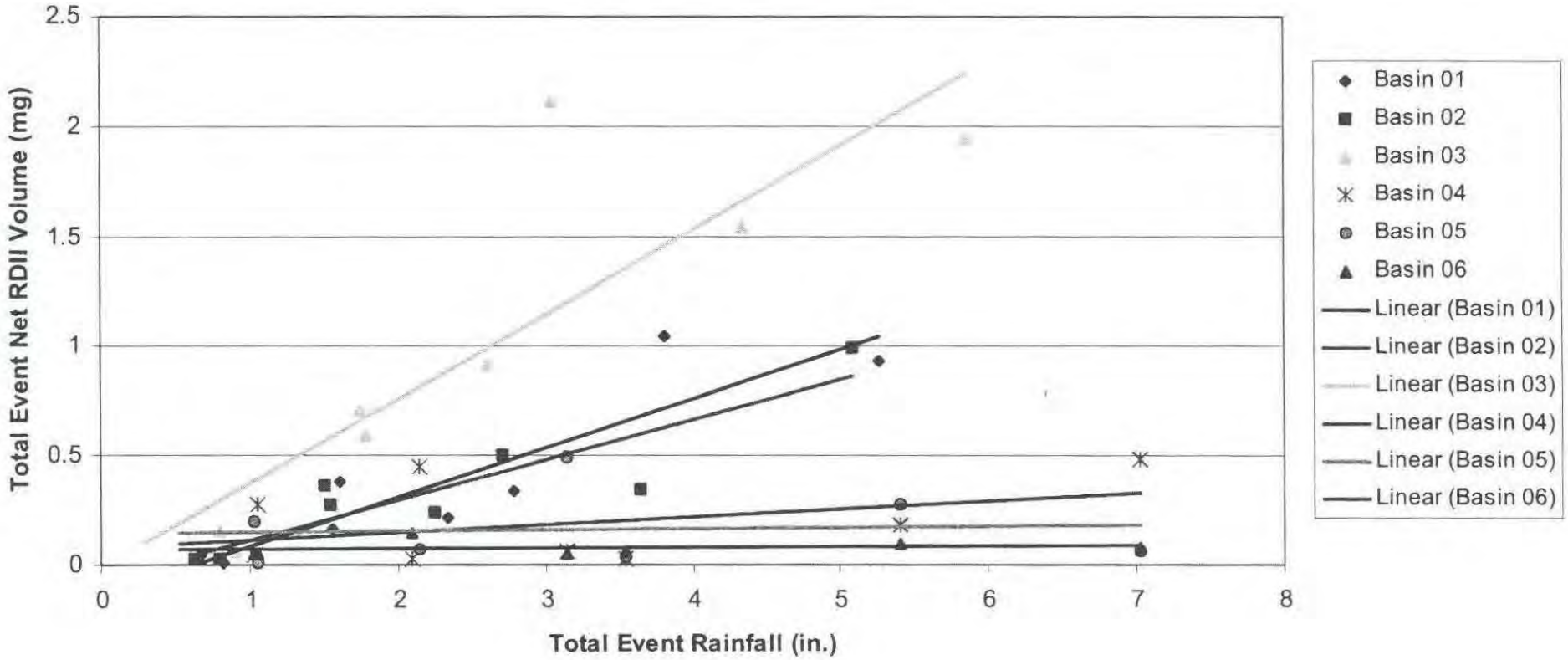

Appendix C

Depth-of-flow Hydographs

Monitoring Site SH 01
Depth-of-flow Hydrograph

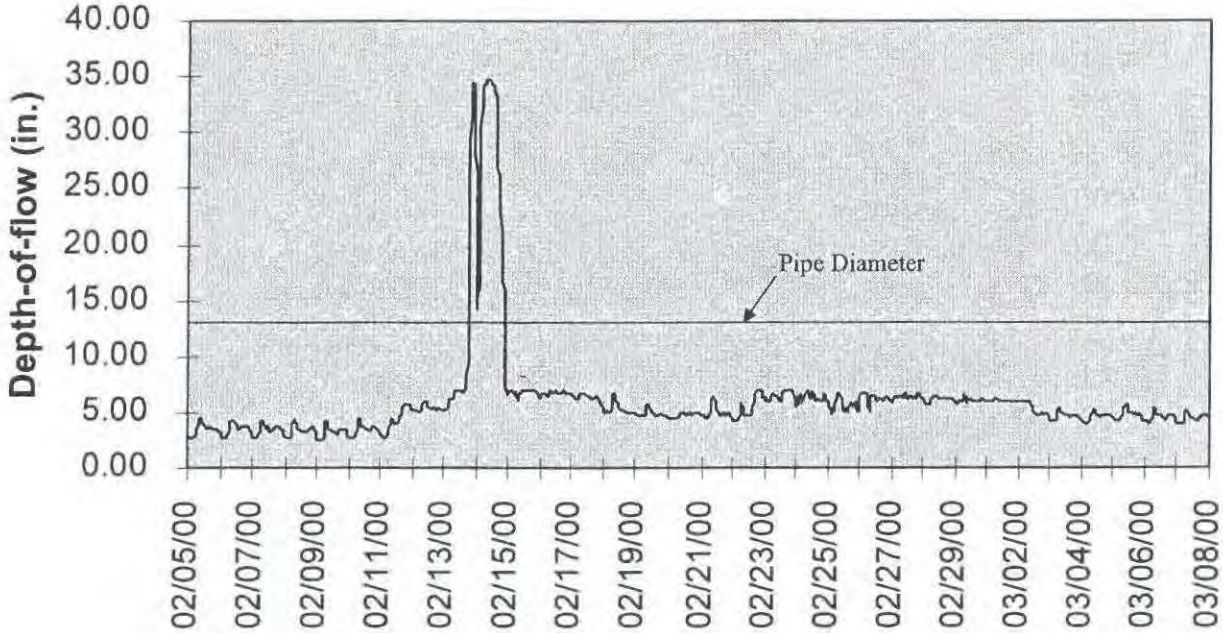

Monitoring Site SH 02A
Depth-of-flow Hydrograph

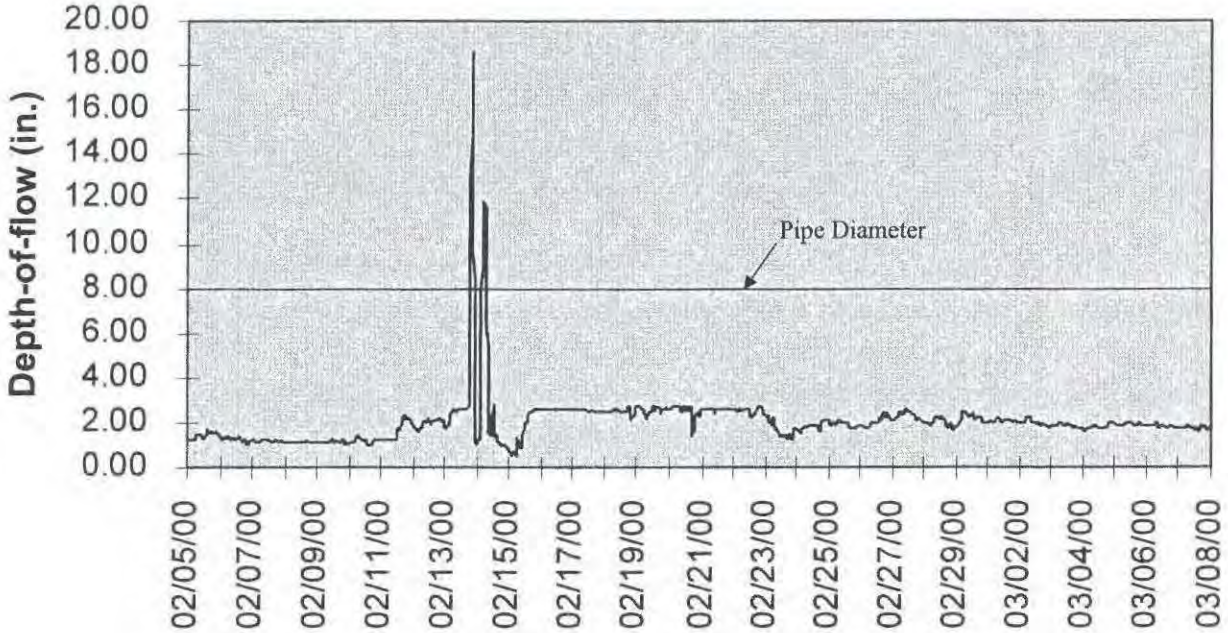

Monitoring Site SH 02B
Depth-of-flow Hydrograph

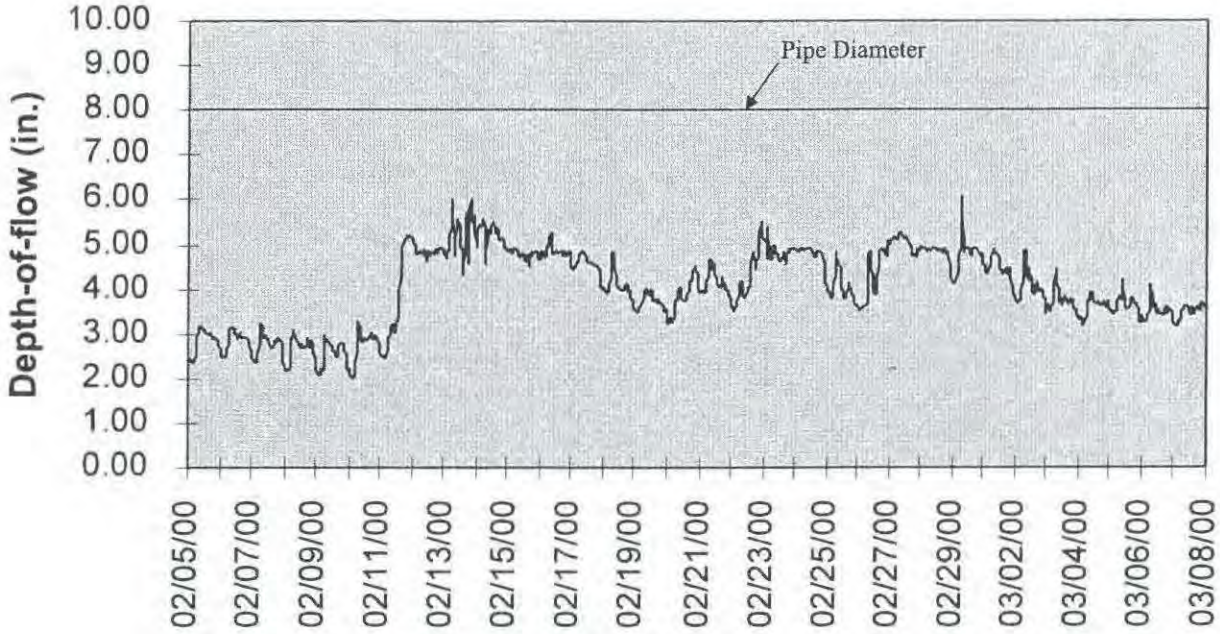

Monitoring Site SH 03A
Depth-of-flow Hydrograph

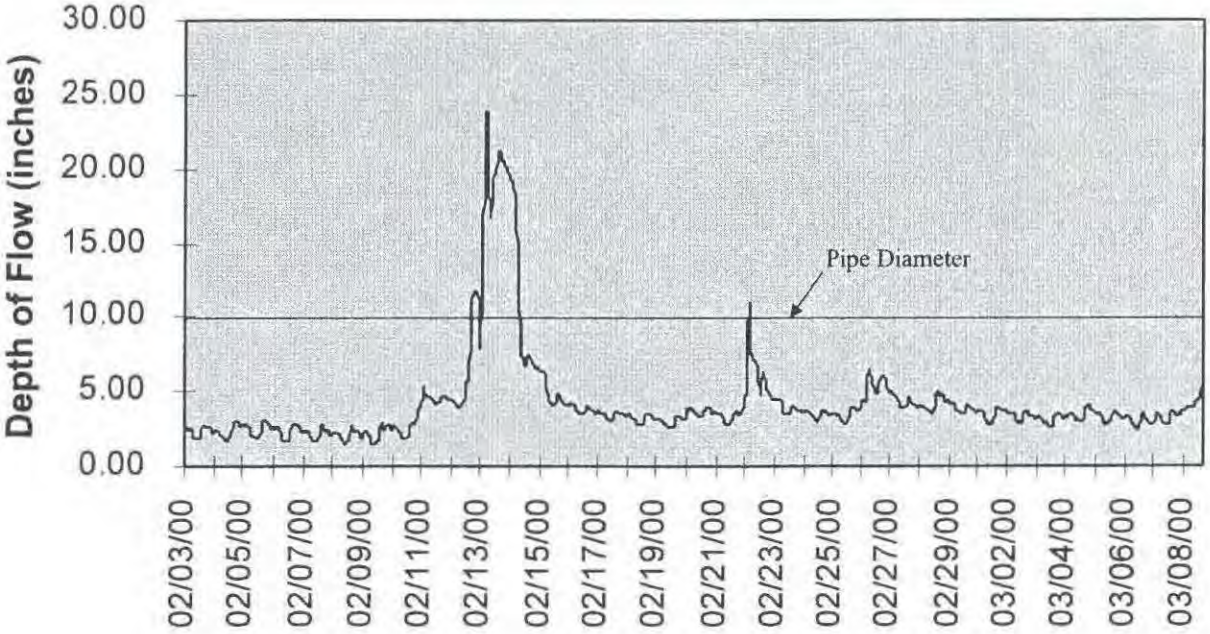

Monitoring Site SH 03B
Depth-of-flow Hydrograph

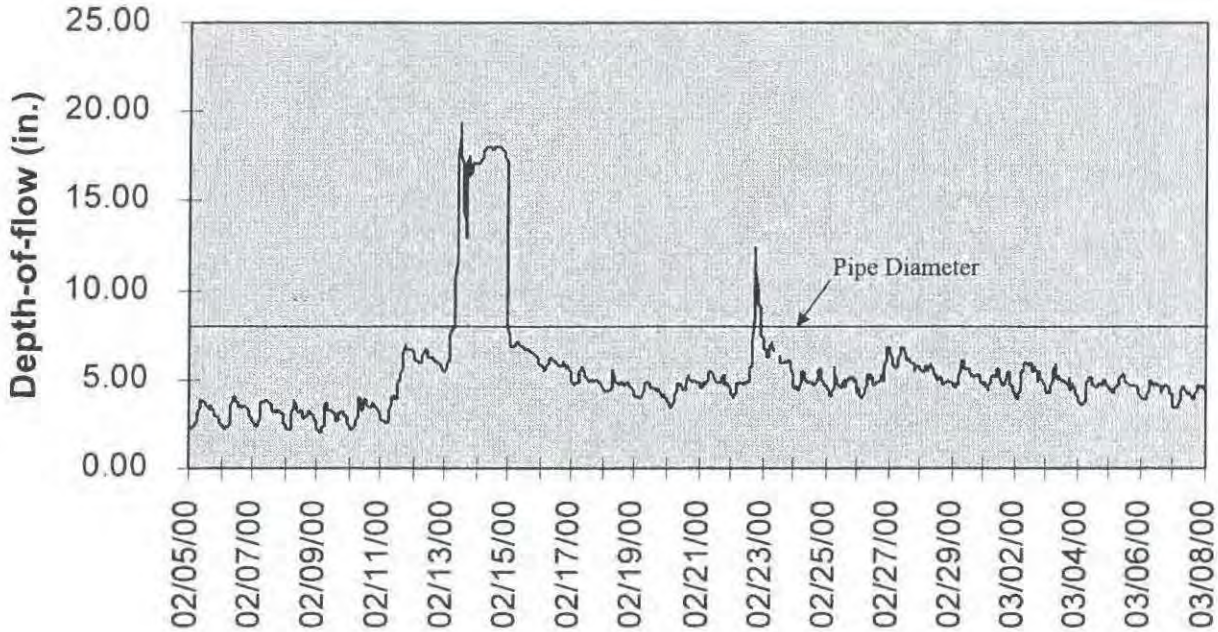

Monitoring Site SH 03C
Depth-of-flow Hydrograph

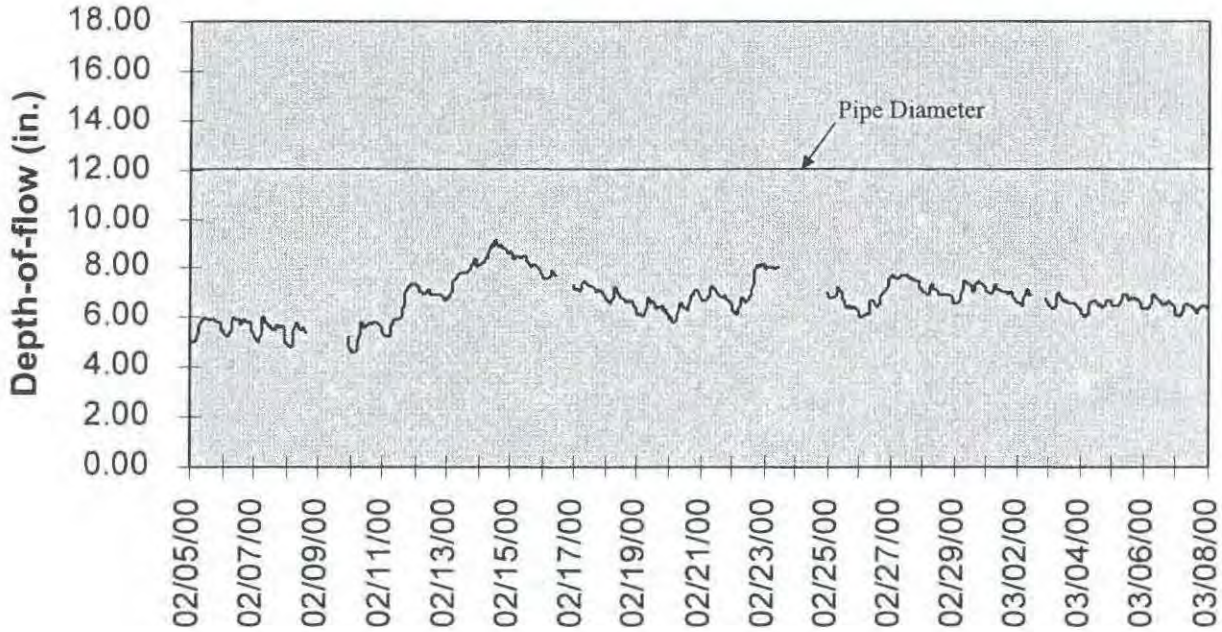

Monitoring Site SH 04
Depth-of-flow Hydrograph

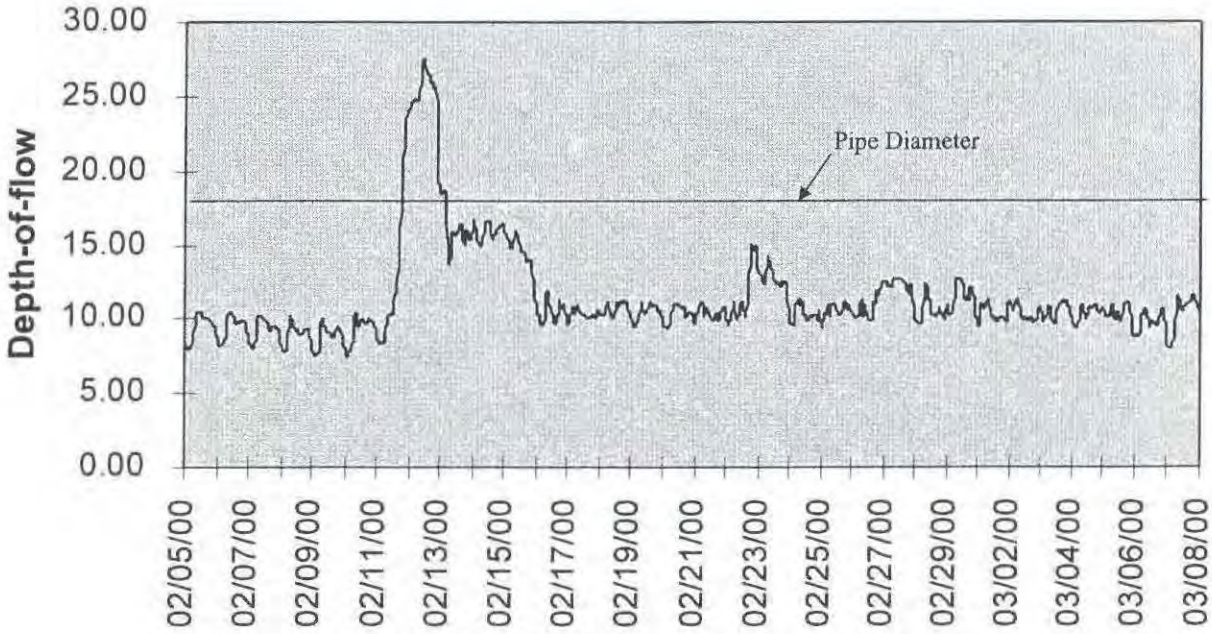

Monitoring Site SH 05
Depth-of-flow Hydrograph

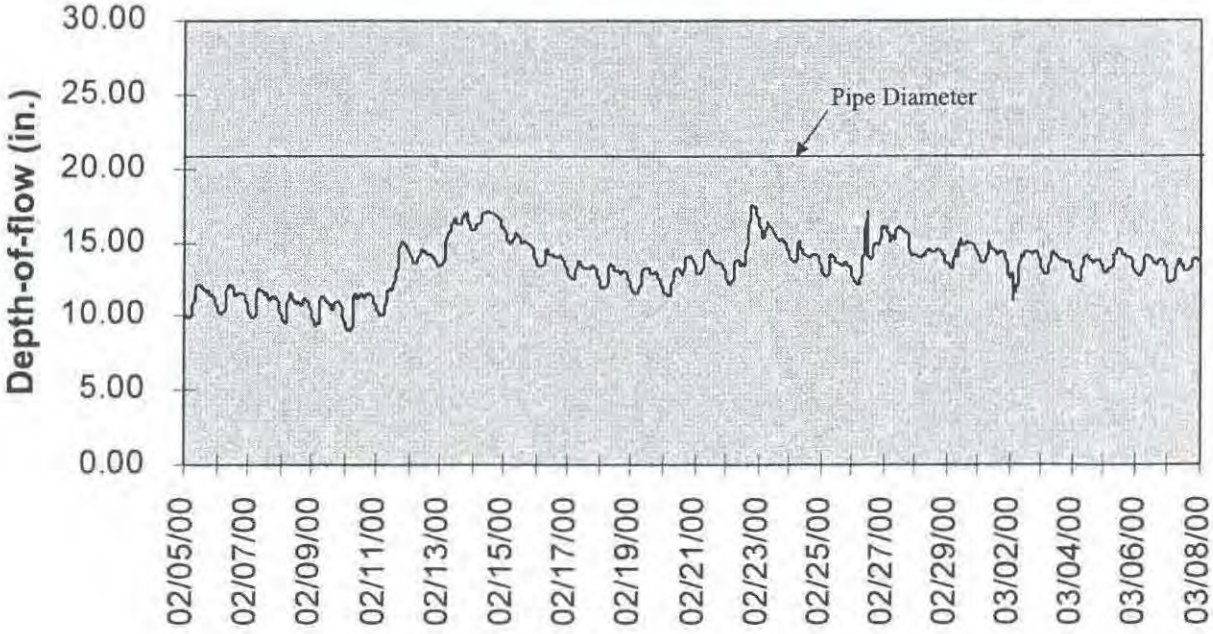

Monitoring Site SH 06
Depth-of-flow Hydrograph

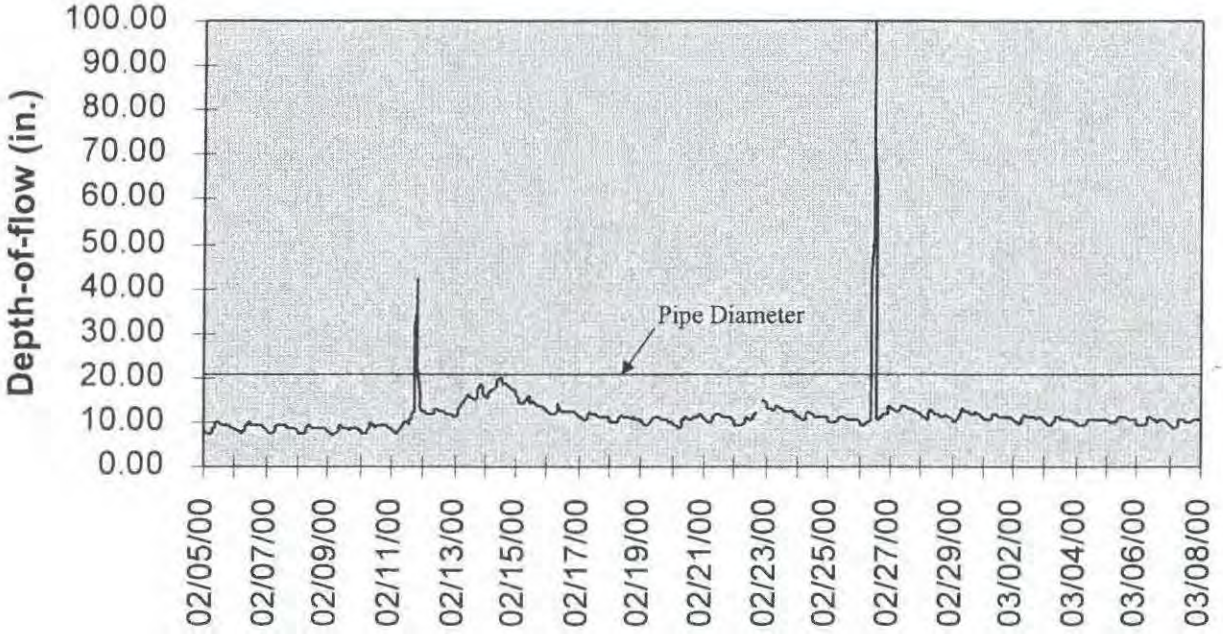

Appendix D

Velocity vs. Depth Scattergraphs

ADS Environmental Services

2/5/2000 12:00:00 AM - 3/7/2000 11:59:00 PM

Intersection of Mitchell and St James

St Helena, CA

Pipe Height: 9.75

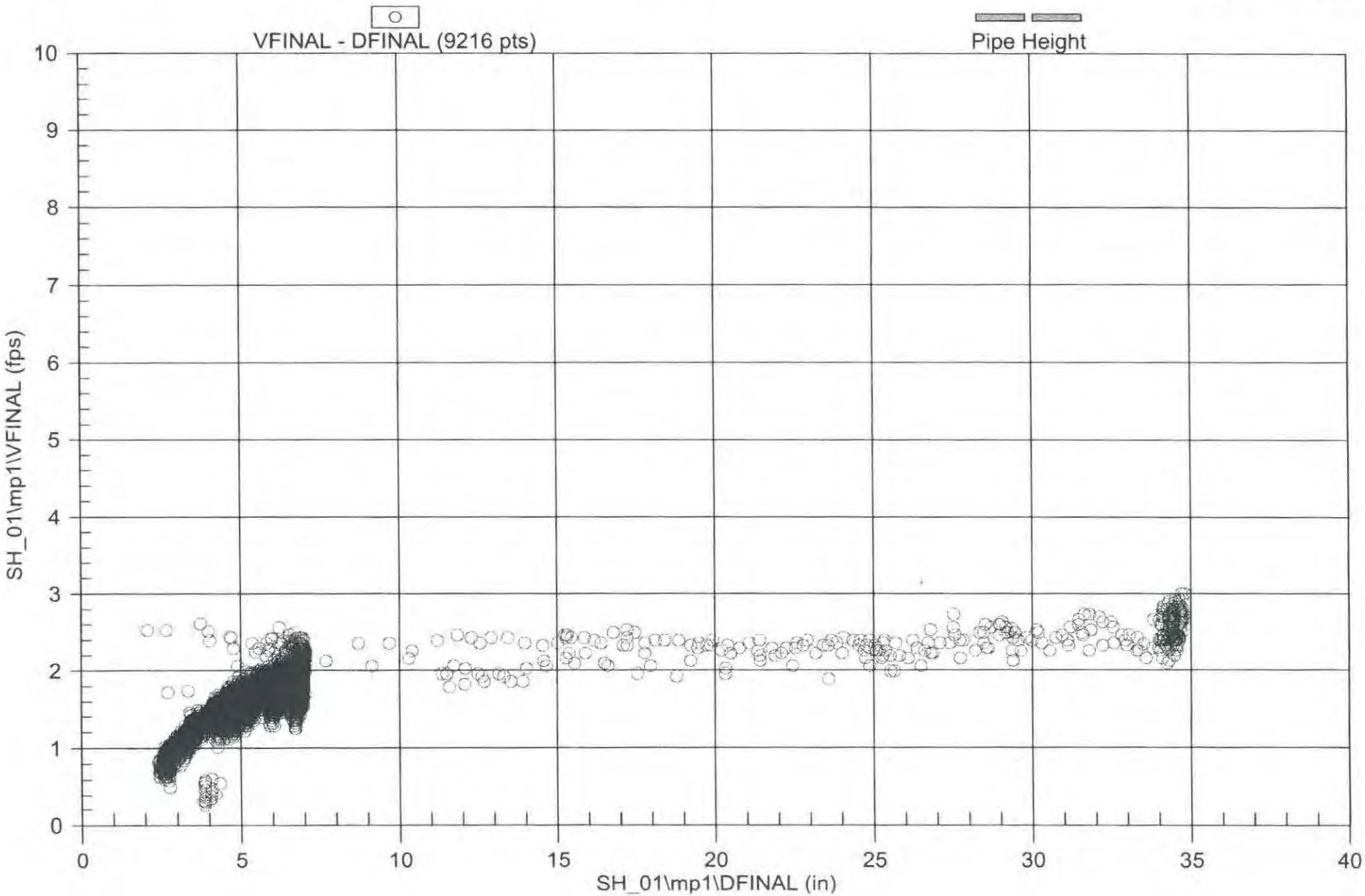

ADS Environmental Services

2/5/2000 12:00:00 AM - 3/7/2000 11:59:00 PM

St Helena, CA

1445 Oak

Pipe Height: 6.00

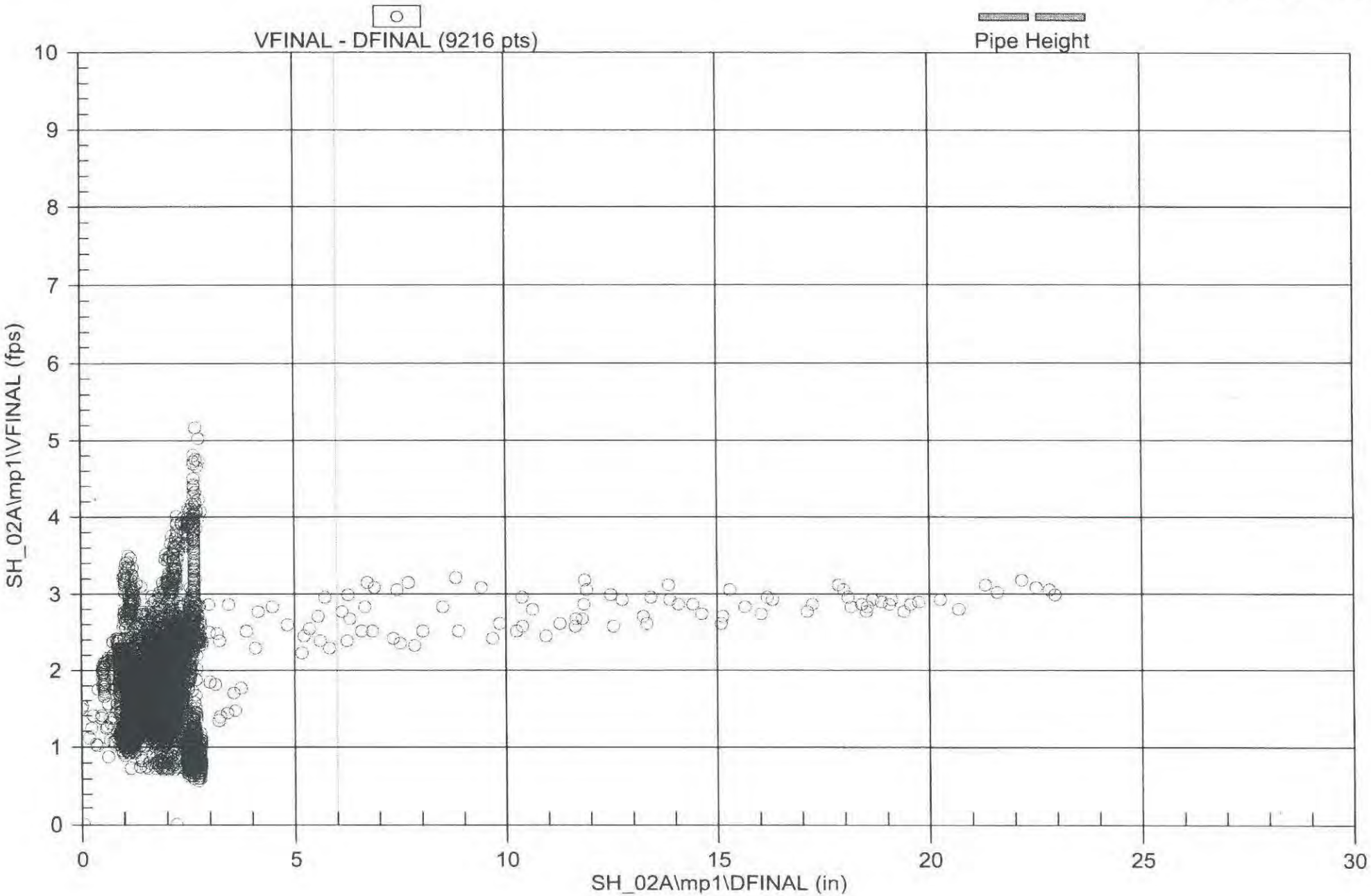

ADS Environmental Services

2/5/2000 12:00:00 AM - 3/7/2000 11:59:00 PM

St Helena, CA

1345 Railroad Avenue

Pipe Height: 7.88

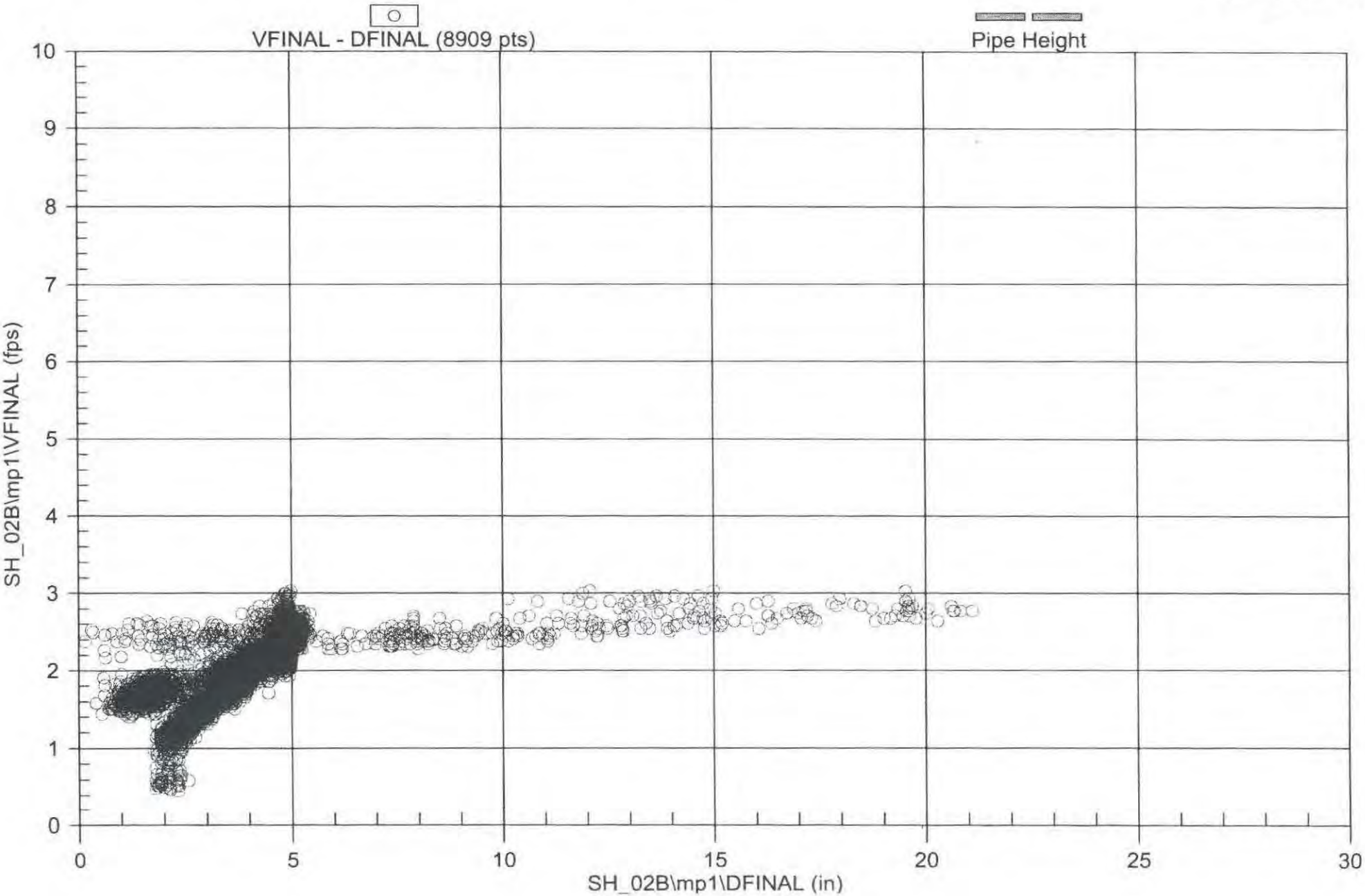

ADS Environmental Services

2/5/2000 12:00:00 AM - 3/7/2000 11:59:00 PM

St Helena, CA

1345 Railroad Avenue

Pipe Height: 7.88

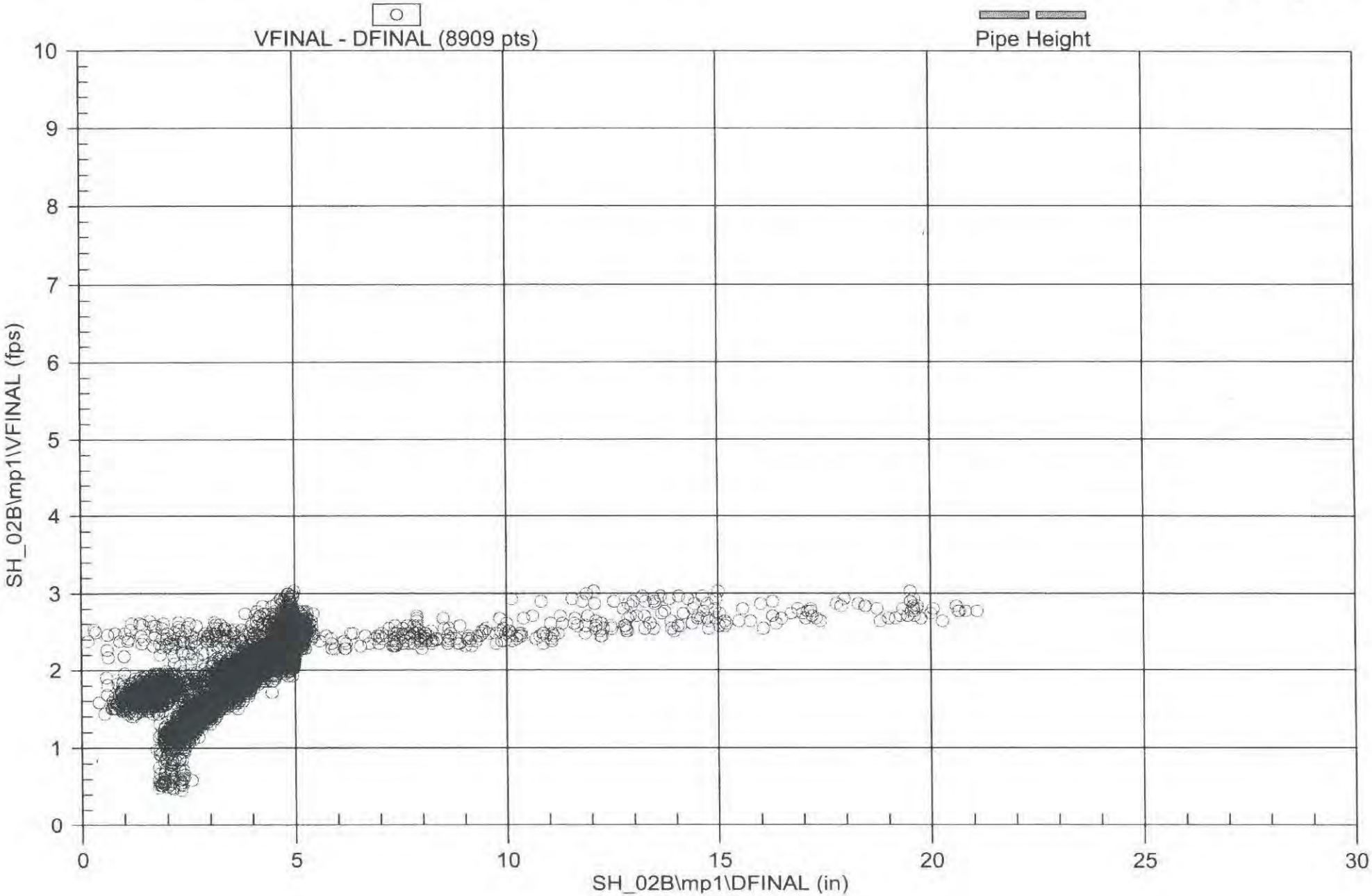

ADS Environmental Services

2/5/2000 12:00:00 AM - 3/7/2000 11:59:00 PM

Intersection of Pope and Church

St Helena, CA

Pipe Height: 10.13

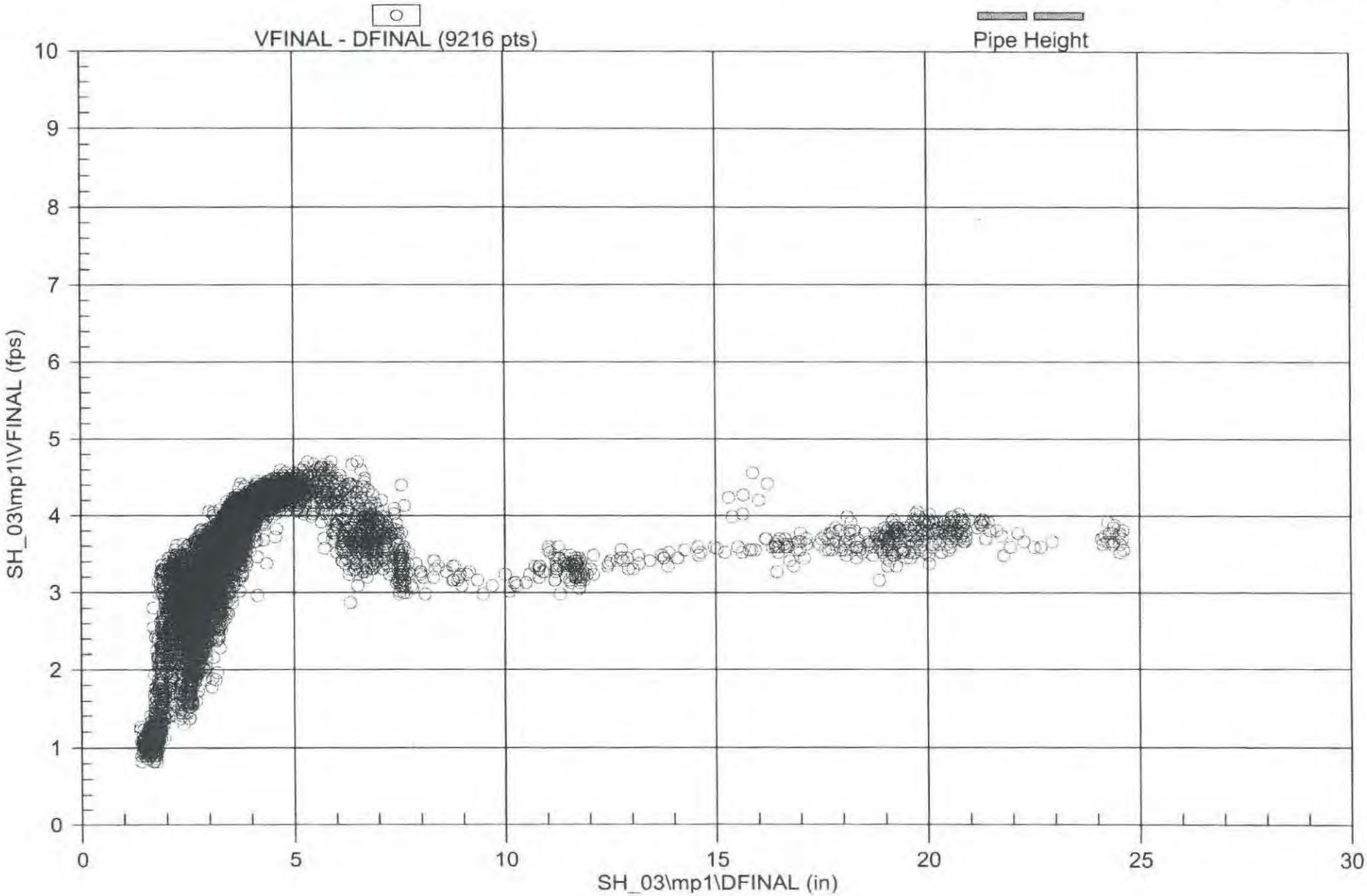

ADS Environmental Services

2/5/2000 12:00:00 AM - 3/7/2000 11:59:00 PM

Intersection of Pope and Church

St Helena, CA

Pipe Height: 8.00

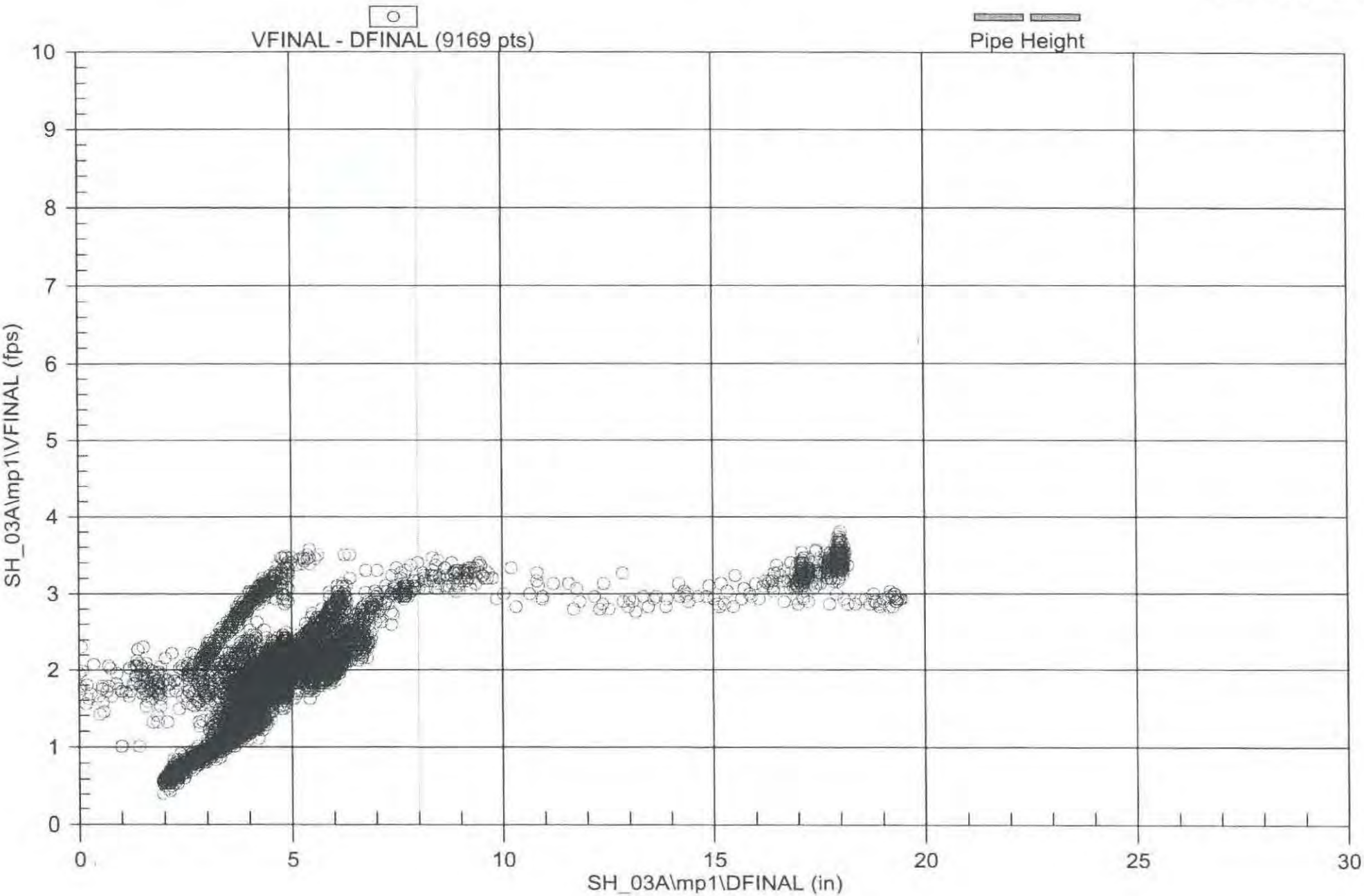

ADS Environmental Services

2/5/2000 12:00:00 AM - 3/7/2000 11:59:00 PM

St Helena, CA

940 Hunt Street

Pipe Height: 12.00

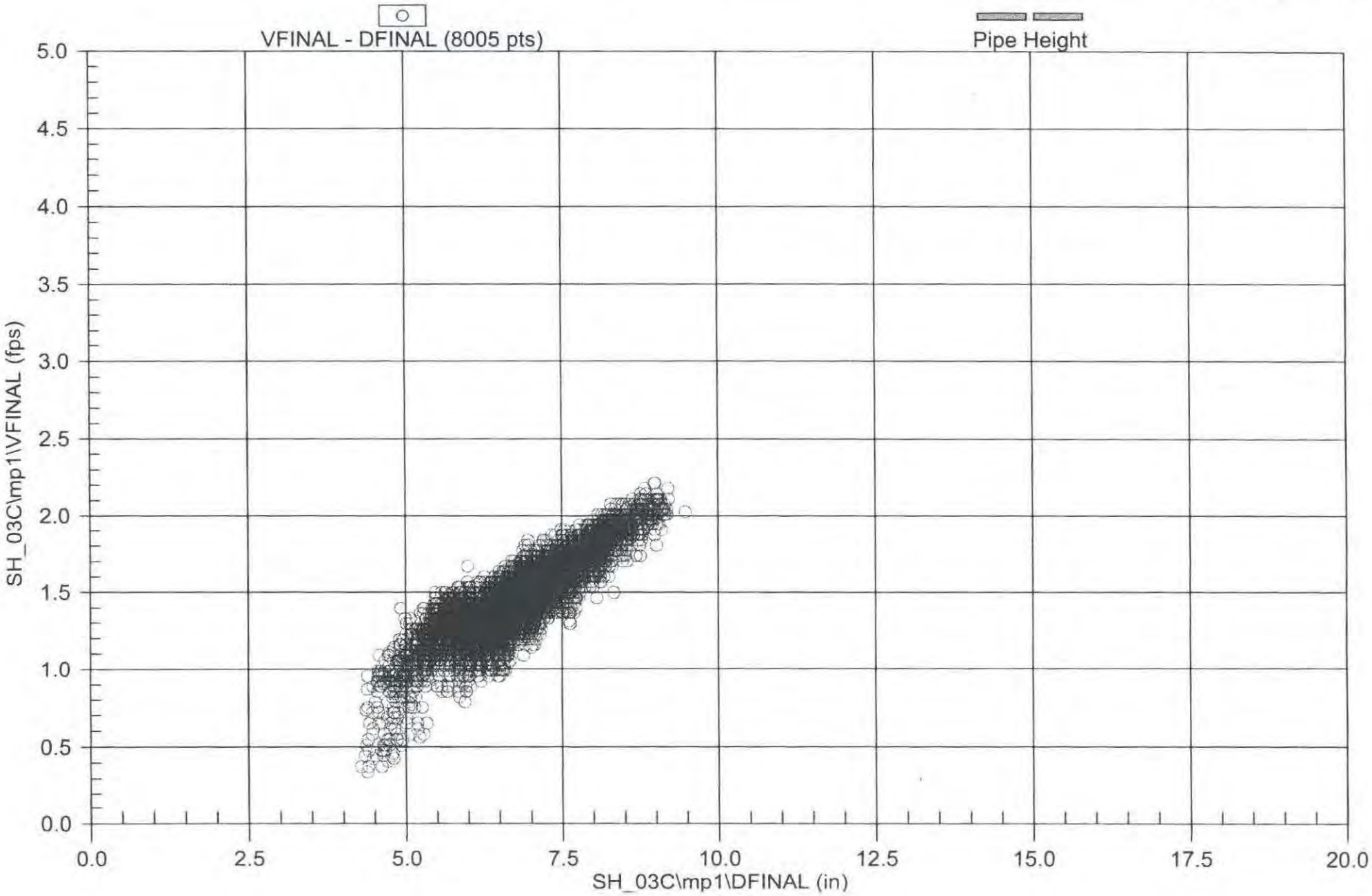

ADS Environmental Services

2/5/2000 12:00:00 AM - 3/7/2000 11:59:00 PM

Intersection Of Redondo and Paseo Grand St Helena, CA

Pipe Height: 17.75

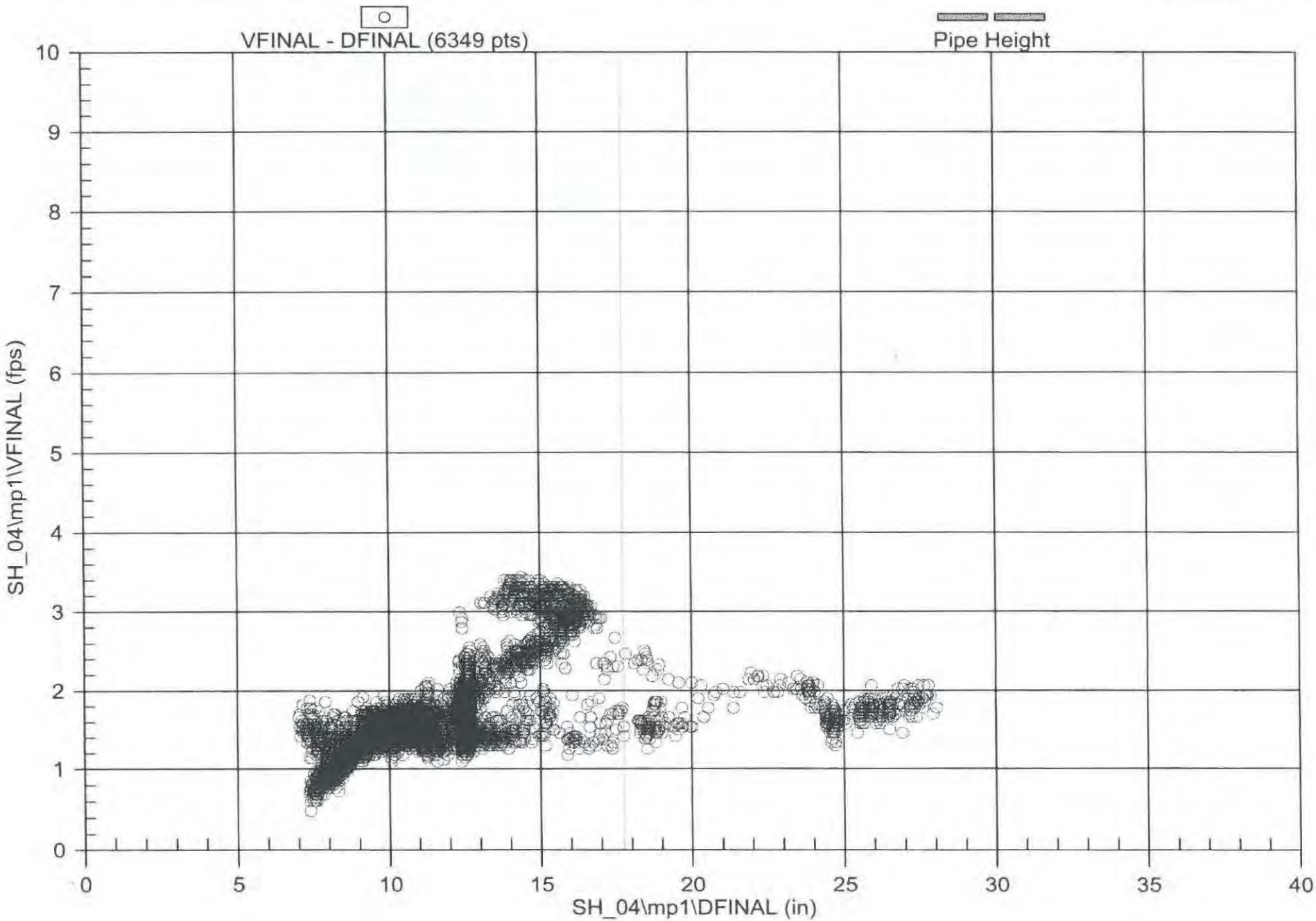

ADS Environmental Services

2/5/2000 12:00:00 AM - 3/7/2000 11:59:00 PM

St Helena, CA

Garden Well

Pipe Height: 21.00

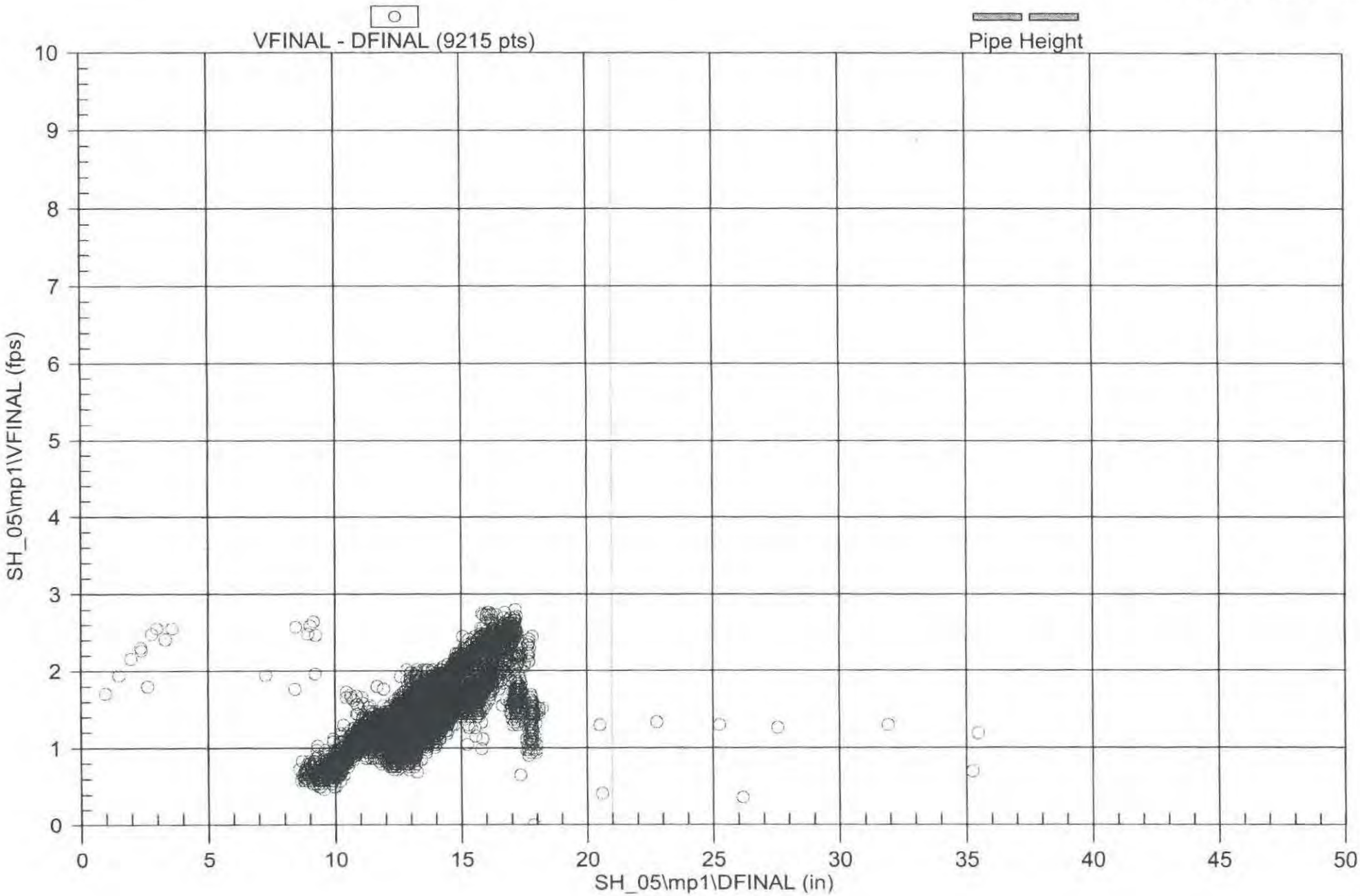

ADS Environmental Services

2/5/2000 12:00:00 AM - 3/7/2000 11:59:00 PM

St Helena, CA

Wastewater Treatment Plant

Pipe Height: 21.13

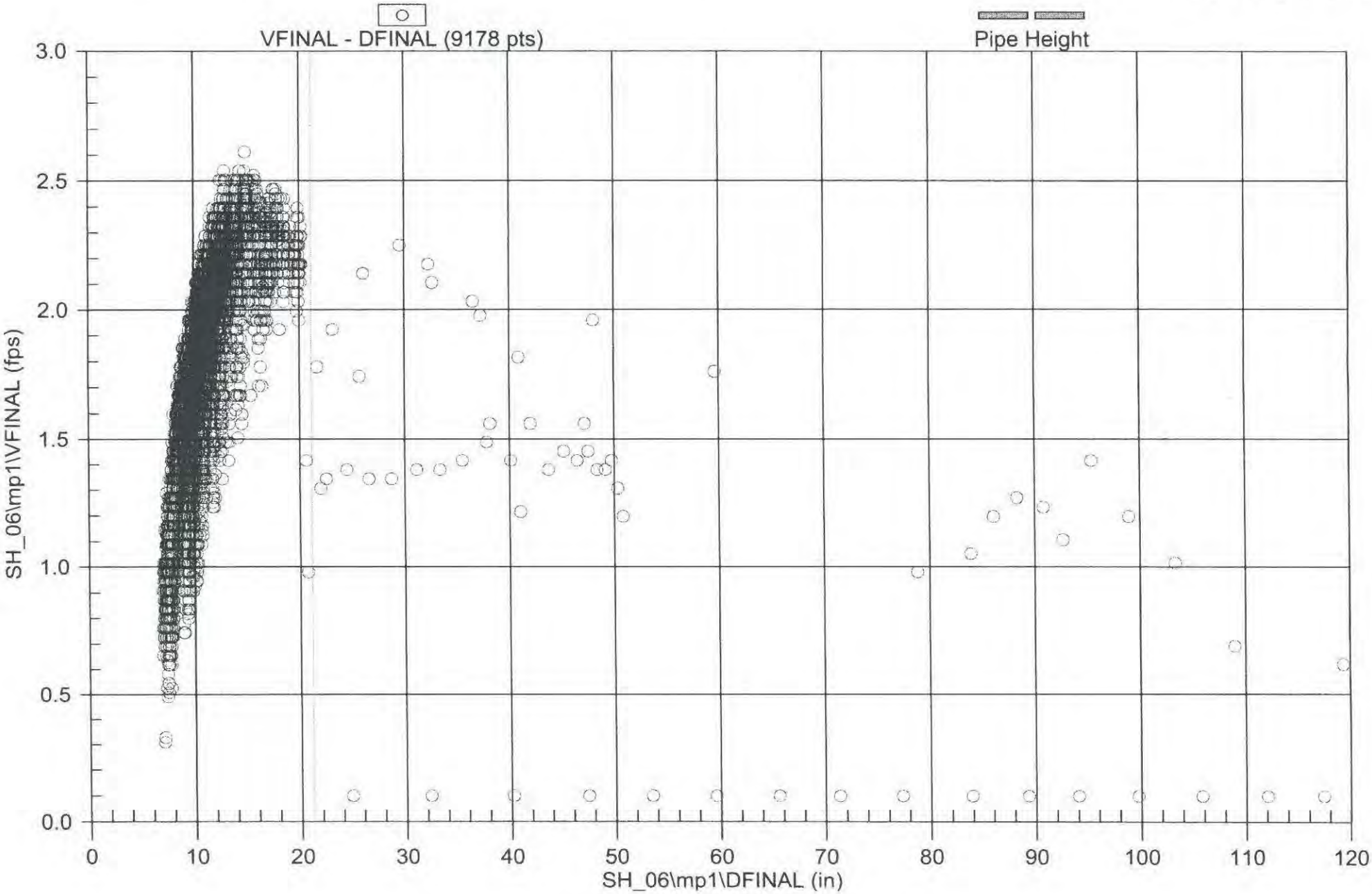

Sewer Flow Isolation Study (2007)

Sewer Flow Isolation Study

Saint Helena, California

Spring 2007

Prepared for:
Summit Engineering, Inc.
463 Aviation Boulevard
Santa Rosa, CA 95403

Prepared By:

ADS ENVIRONMENTAL SERVICES®

Table Of Contents

Introduction 2

Scope 3

Flow Isolations
Purpose 3
Procedure 4

Flow Isolation Results 7

Conclusions and
Recommendations.....8

Introduction

Summit Engineering Inc. contracted with ADS Environmental Services to provide flow isolation services for portions of the sewer system in the City of Saint Helena. Nighttime flows were isolated at 32 manhole locations within former flow monitoring basins 1, 2, and 3 of the City sewer system. This report presents the results of the flow isolation study indicating areas of excessive apparent infiltration. The locations of the flow isolations are indicated in Figure 1 with a marker placed on the associated pipe in which the weir was placed.

Figure 1 – Flow Isolation Locations

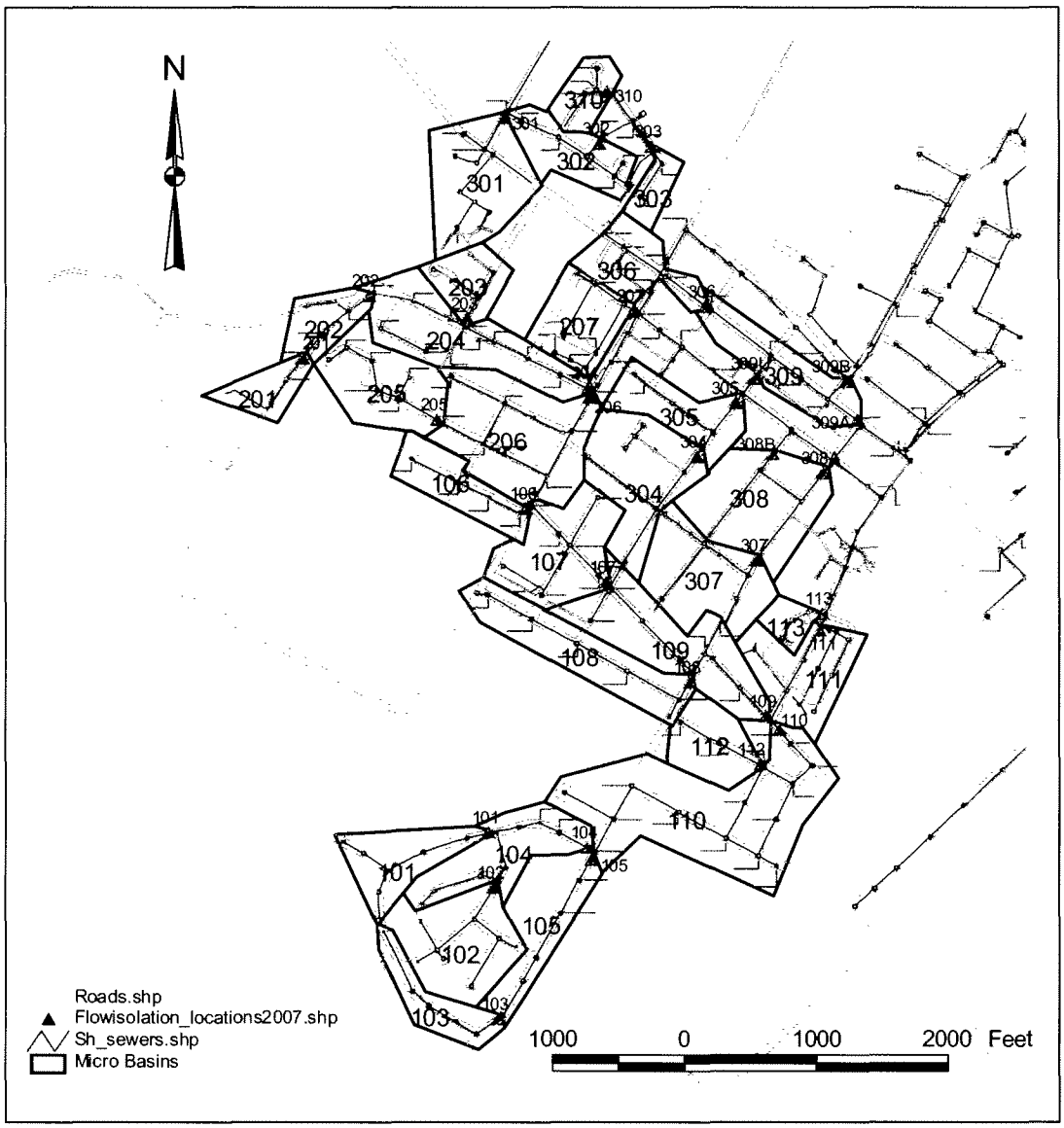

SCOPE

The scope of this project was to perform up to 35 flow isolations at sites selected by ADS in cooperation with Summit Engineering. The flow rate data from these flow isolations was compiled for each area associated with the isolation, and then ranked in terms of relative severity by normalizing the flow rates in terms of flow per associated mile of pipe in gallons per day per mile (gpd/mile). Although 32 locations were selected for flow isolations, four locations were re-measured on different nights to confirm stable flow readings. These include site 104, 105, 110, 112, and 309B.

FLOW ISOLATIONS

Purpose

Flow isolations allow infiltration to be quantified by dividing the previously delineated flow monitoring basins[1] into smaller zones (micro-basins) and measuring the late-night (clear water) flow rate within each of the micro-basins. The process consists of recording flows of micro-basins by taking instantaneous weir readings at the isolation points during periods of minimum sewage contribution - normally between 2:00 AM and 6:00 AM. By subtracting any flows from upstream micro-basins, net infiltration for a particular micro-basin may be determined. Where applicable, the observed degree of clarity of the flow can be applied as a multiplier to the measured flow to calculate the portion that is considered infiltration. It is noted that all flows quantified during this study were comprised of "clear water".

Once infiltration rates are established, a determination of *Excessive* or *Non - Excessive* infiltration rates is determined for each micro-basin. Based on this evaluation, subsequent manhole and TV inspections are recommended.

[1] Inflow/ Infiltration Analysis Report for Saint Helena prepared by ADS, July 2000.

All sewage collection systems will have a certain amount of infiltration. The joint ASCE-WEF (1982) design guidelines for gravity sewers gives a table of guidelines used by various municipalities for the infiltration that should be used in capacity calculations for a sewer system approaching the end of its design life. These guidelines are expressed in terms of gallons per day per inch diameter mile (gpd/IDM) and in terms of gpd/mile (assuming 8-inch pipes) and are presented in the following table.

Table 1
ASCE-WEF Infiltration Guidelines

Number and Percent Of Cities Reporting	I&I Allowance (gpd/IDM)	Total I&I Allowance (gpd/mile)
4 (3.1%)	1500	12,000
4 (3.1%)	1000	8,000
1 (0.8%)	800	6,400
2 (1.6%)	700	5,600
1 (0.8%)	600	4,800
63 (49.2%)	500	4,000
11 (8.6%)	450 to 300	3,000
16 (12.5%)	250 to 150	1,600
21 (16.4%)	100	800
5 (3.9%)	50	400
Total Cities = 128	Weighted Avg. = 422	Weighted Avg. = 3,200

Procedure

Flow isolations were performed with calibrated volumetric V-Notch weirs and completed between the hours of 2:00 AM and 6:00 AM to record infiltration entering each micro-basin. ADS field crews recorded pipe diameter, flow clarity, active leaks and other manhole or line observations while performing the flow isolations. Flow isolation field log forms are included in the Appendix of this report along with flow isolation reference maps used during field operations. Flow isolations were conducted at locations selected and evaluated by ADS and Summit Engineering.

It is noted that the intended 8" pipe to be measured at location 111 (the line coming into this manhole from the east) was not found at this location, therefore flow was quantified in the main 10" line along Mitchell Drive. This modified the boundary of micro-basin 111 from its original configuration. The actual sewer connection from this area to the east of Mitchell Drive will require field verification.

Based on electronic maps provided by Summit Enginering, ADS mapped locations and linear footage (LF) of each micro-basin. Total sewer pipe lengths for each micro-basin were determined based on computed lengths from the maps provided. Pipe diameters were measured in the field at the flow isolations points.

Micro-basins are either hydraulically dependent or independent. The flow quantities generated for an independent micro-basin were based on one or more flow isolation locations at the outflow point(s) of the micro-basin independent of all other locations, while the flow quantities generated by a dependent micro-basin include flow from upstream micro-basins. Upstream flows, derived from upstream flow isolations, were subtracted from the dependent micro-basin flow quantities to calculate net flow for the dependent micro-basins.

Weirs are available for standard pipe diameter sizes ranging from 6 inches up to 18 inches. Weirs were placed in sewer lines at the outlet locations of each micro-basin. Flowrates in gallons per day (gpd) were recorded from the weir readings. When a weir was installed, the flow was allowed to stabilize for at least five minutes before the first reading was taken. The weir flowrate reading was recorded only after the flow stabilized to the same reading for two consecutive 2 minute intervals. A depiction of a stabilized weir at a pipe outfall is shown in Figure 2.

Figure 2 – Depiction of Flow Isolation Weir

In case where unobstructed depths of flow were greater than 1-inch or if backwater disallowed weir readings to be made with confidence, flow quantification was also attempted using direct depth and velocity measurements. The depth of the flow was manually measured with a folding carpenter ruler and velocity was obtained with a portable electromagnetic velocity meter. The flow quantity was then calculated using the continuity equation for open channel flow:

$$Q = A * V$$

Q = Quantity (gpd)
A = Cross-sectional area of flow (ft^2)
V = Average Velocity (ft/s)

Cross-sectional Area for a partially full pipe is a function of measured depth (less any measured silt). Average Velocity is calculated using standard 0.9 average / measured peak ratio.
The conversion from ft^3/s to gpd is 646317.

An example is presented below for Site 309B comparing weir-based flow to flow rate based on direct open channel measurements.

Example (Site 309B):

Diameter: 12"
Depth: 4.38" Peak Velocity: 0.21 ft/sec

Cross-sectional Area of Flow: 0.259 (ft^2)
V_{avg} = ~0.19 ft/sec

$Q = A_{(cross\text{-}sect)} \times V_{avg} \times gpd$ conversion
Q = 0.259 ft^2 x 0.19 ft/sec x 646317
Q = 31,800 gpd

Q_{weir} = 35,960 gpd

Flow Isolation Results

Tabular results of the flow isolations are summarized in Table 1. The results of the flow isolations are depicted graphically in Figure 3 showing colored gradations associated with worsening classifications of observed infiltration. The primary break point of 4000 gpd/mile was chosen based on the majority of respondents per Table 1.

Figure 3 – Flow Isolation Infiltration Results

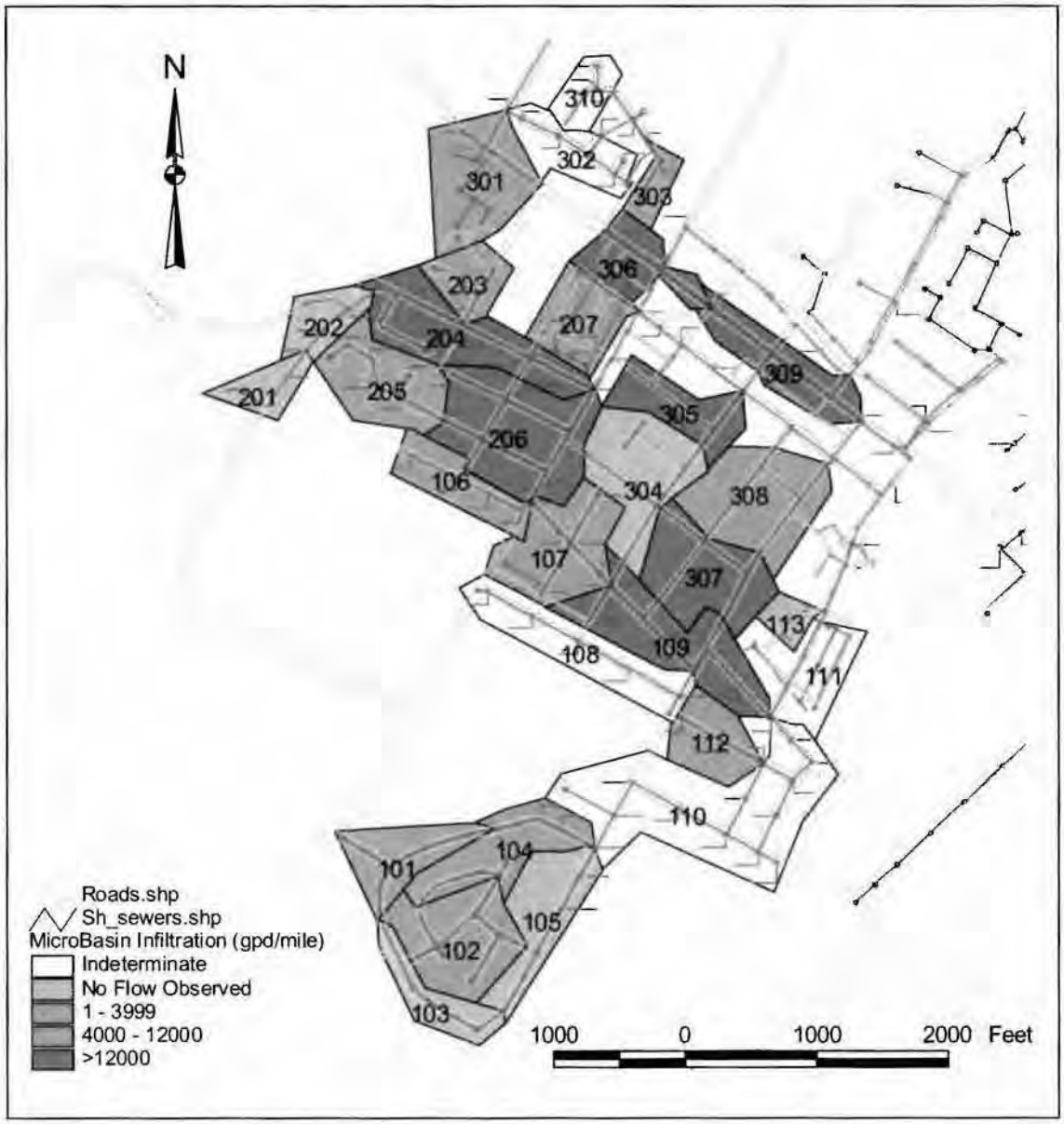

Three of the micro-basins indicated an imbalance regarding net flows. They were 110, 111, and 302. This may be the result of flows bypassing the weir through the piping trench (e.g. at 302) or low confidence due to a high degree of upstream subtracted flows (110, 111), or a combination of both factors. Three micro-basins showed stagnant flow conditions likely due to a downstream obstruction. They were 108, 302, and 310. Consequently, if infiltration flows were present at these locations, it was not quantifiable (i.e. flows may have occurred in the trench and not in the pipe during the night-time minimum flow period). These 5 different locations are highlighted or footnoted in Table 1.

It is notable that flows were re-measured at location 110 on 3 separate nights (at approximately the same time), each night resulting in different values of infiltration. The highest measured value is indicated in Table 1 for this location. An explanation for this was not readily evident.

Conclusions and Recommendations

It is generally evident that each of the 3 primary basins appear to worsen in measured degree of infiltration moving downstream. This is likely the result of the groundwater table encompassing more of the sewer trench as the sewer progresses deeper toward the effluent point of each basin.

Given the relatively ubiquitous excessive infiltration measured in the micro-basins, it is likely that the entire sewer system in these basins becomes inundated with infiltrating groundwater during extended periods of heavy precipitation.

The highest rate of inifiltration was measured in the lowest micro-basin within basin 3 (at location 309B) at an estimated net flow rate of 24,000 gpd. This flow rate in conjunction with the observed gravel and silt in this line suggests that portions of the piping in this micro-basin may be failing and allowing backfill or even road bed materials to enter the sewer.

ADS recommends that the City of Saint Helena conduct CCTV (video) inspection of all the pipes within micro-basin 309 as soon as practicable. Selected other areas should follow, including micro-basins 102, 109 and 206, to determine frequency of defects (e.g. every joint or just at defects such as offsets or broken segments).

Given the age of much of the sewer system and the apparent degree of infiltration and inflow (I/I) as evidenced by this and the previous 2000 study, it is recommended that the City adopt a program to rehabilitate the sewer system while continuing to monitor flows in these primary basins to capture progress toward I/I removal and wastewater flow capacity improvement. It appears that the rehabilitation should begin at the lower reaches of the system (e.g. micro-basin 309) and move upstream.

Table 2 - Micro Basin Flow Isolation Results

MicroBasin ID	SumPipes (feet)	Upstream Sites	Net Flow Microbasin (% of gross)	Site ID	Pipe Dia (in)	Weir Gross Flow (gpd)	Net Flow Microbasin (gpd)	Normalized Net Flow Microbasin (gpd/mile)
101	2062			101	8	2440	2440	6248
102	2421			102	8	4690	4690	10229
103	1615			103	8	0	0	0
104	2196	101+102	19%	104	6	8806	1676	4030
105	1653	103	--	105	6	0	0	0
106	1284			106	8	260	260	1069
107	2545	106	86%	107	6	1916	1656	7000
108*	2559			108	8	0*	0*	--*
109	2718	107+108	79%	109	8	9243	7327	14233
110*	5058	104+105+112	--*	110	8	9243	-1315	--*
111*	3899	109 + 110	--*	111	10	11180	-3223	--*
112	848			112	6	1752	1752	10909
113	831			113	8	0	0	0
201	1003			201	8	0	0	0
202	1268	201	--	202	8	0	0	0
203	1356			203	8	57	57	222
204	3355	202+203	99%	204	6	10512	10455	16454
205	1735			205	6	1458	1458	4437
206	3674	205	86%	206	6	10512	9054	13012
207	2360			207	6	464	464	1038
301	3363			301	8	1916	1916	3008
302*	1722	301	--*	302	8	0*	-1916	--*
303	637			303	6	115	115	953
304	2888			304	6	0	0	0
305	1641	304	100%	305	6	5160	5160	16603
306	1296			306	6	3196	3196	13022
307	2428			307	6	5553	5553	12076
				308A	6	5553		
308	2255	307	26%	308B	6	1916	1916	4486
				309A	6	0		
				309B	12	35960		
309	2202	306	67%	309U	6	8806	23958	57446
310*	932			310	6	0*	0*	--*

* - micro basin flow data inconclusive due to debris & backwater and/or imbalance with upstream sites.

Appendix

Microbasin Flow Isolation Field Logs and Maps

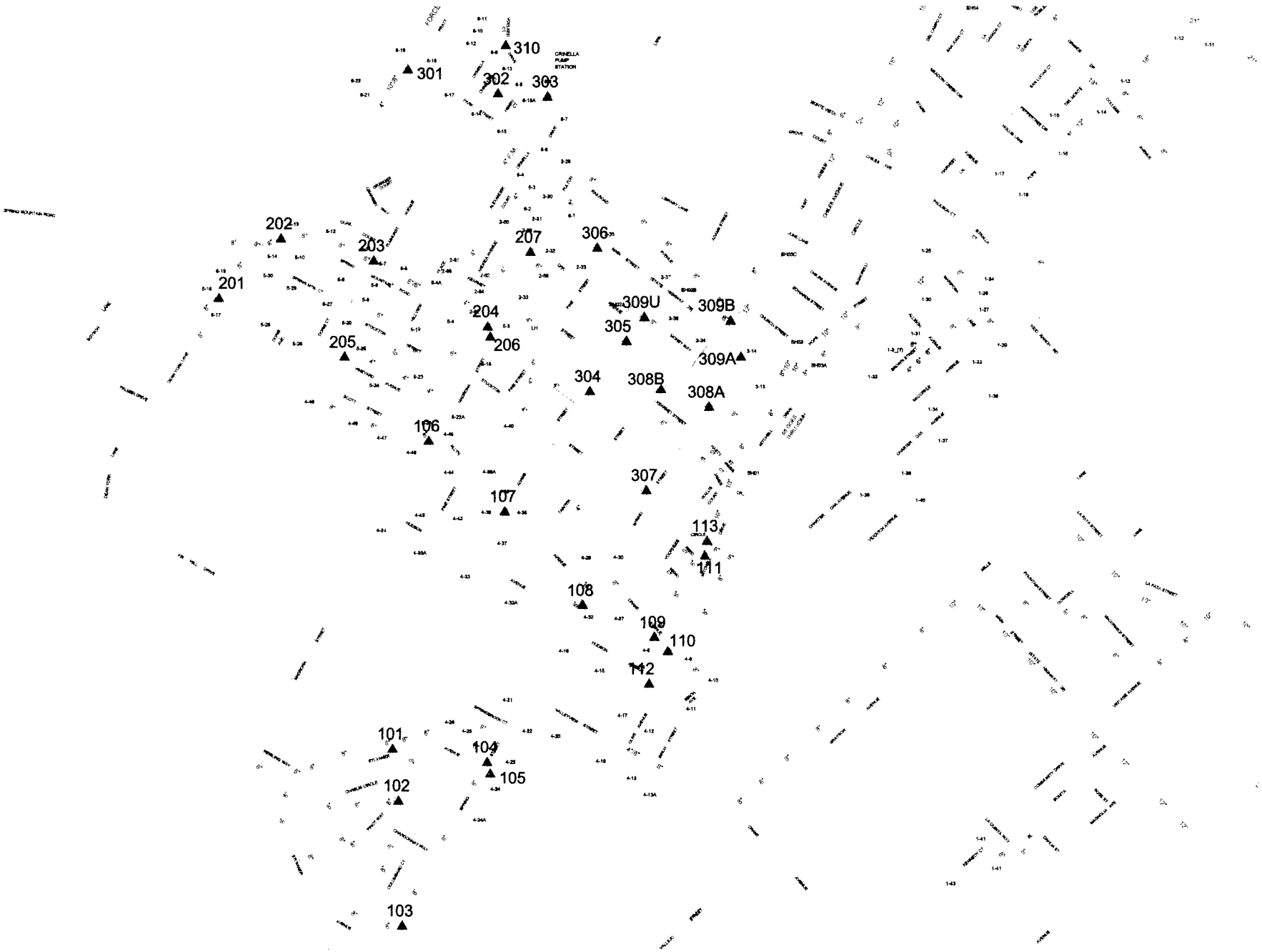
310
301
302
303
202
203
207
306
201
309U
309B
204
305
205
206
309A
304
308B
308A
106
307
107
113
111
108
109
110
112
101
104
105
102
103

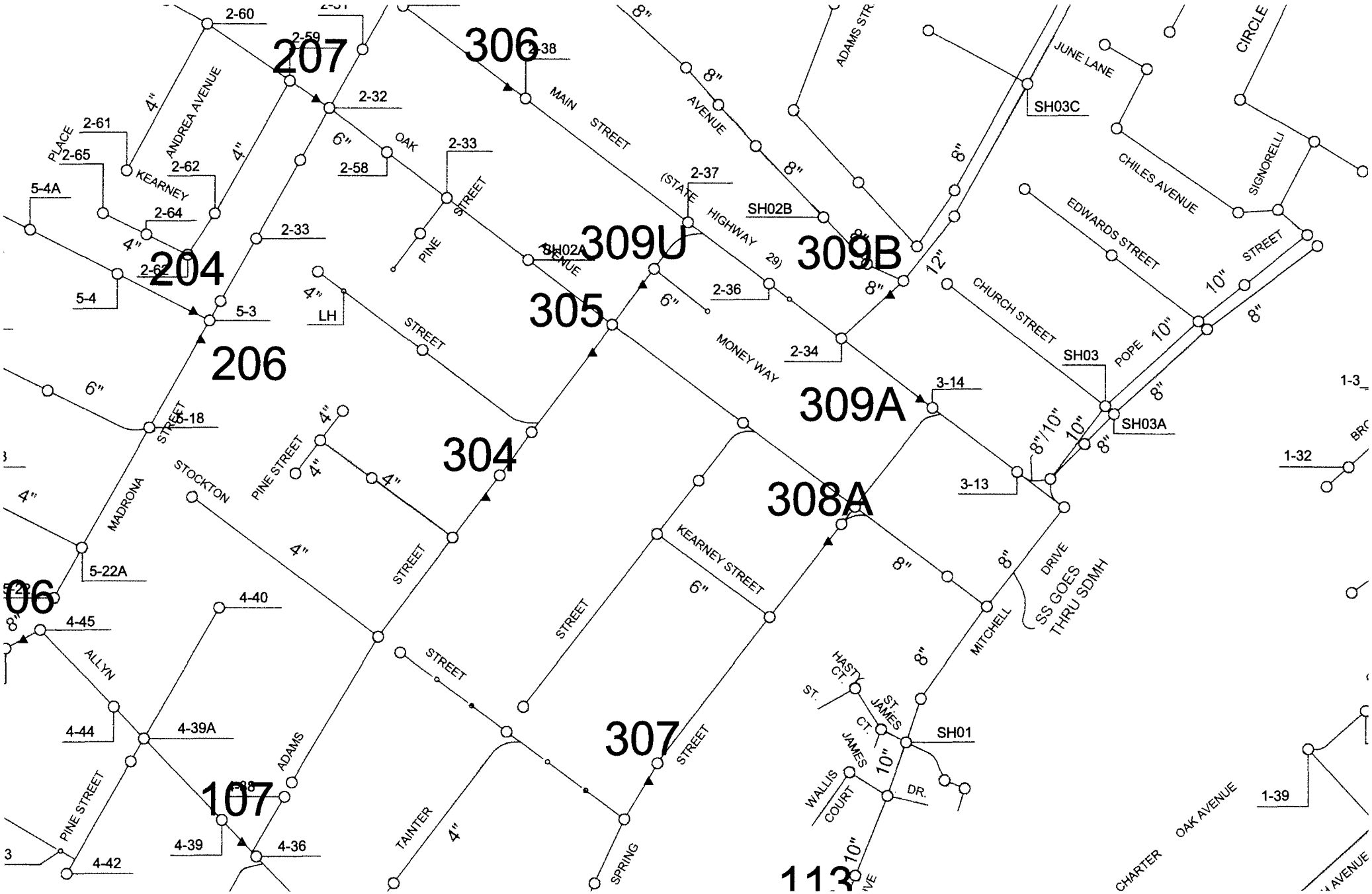
207
306
204
309U
309B
305
206
309A
304
308A
307
107
113
06
2-60
2-59
2-38
2-32
2-61
2-65
2-62
2-58
2-33
2-37
2-64
2-36
2-34
5-4A
5-4
5-3
5-18
5-22A
3-14
3-13
SH03C
SH02B
SH02A
SH03
SH03A
SH01
4-40
4-45
4-44
4-39A
4-39
4-36
4-42
1-32
1-39
1-3
ANDREA AVENUE
PLACE
KEARNEY
OAK
PINE
STREET
MAIN STREET
AVENUE
(STATE HIGHWAY 29)
ADAMS STR.
JUNE LANE
CIRCLE
CHILES AVENUE
SIGNORELLI
EDWARDS STREET
CHURCH STREET
POPE
MONEY WAY
LH
MADRONA
STOCKTON
PINE STREET
ALLYN
ADAMS
TAINTER
SPRING
KEARNEY STREET
MITCHELL
DRIVE
SS GOES THRU SDMH
HASTY CT.
ST. JAMES CT.
WALLIS COURT
JAMES DR.
CHARTER
OAK AVENUE
8"
6"
4"
12"
10"
8"/10"

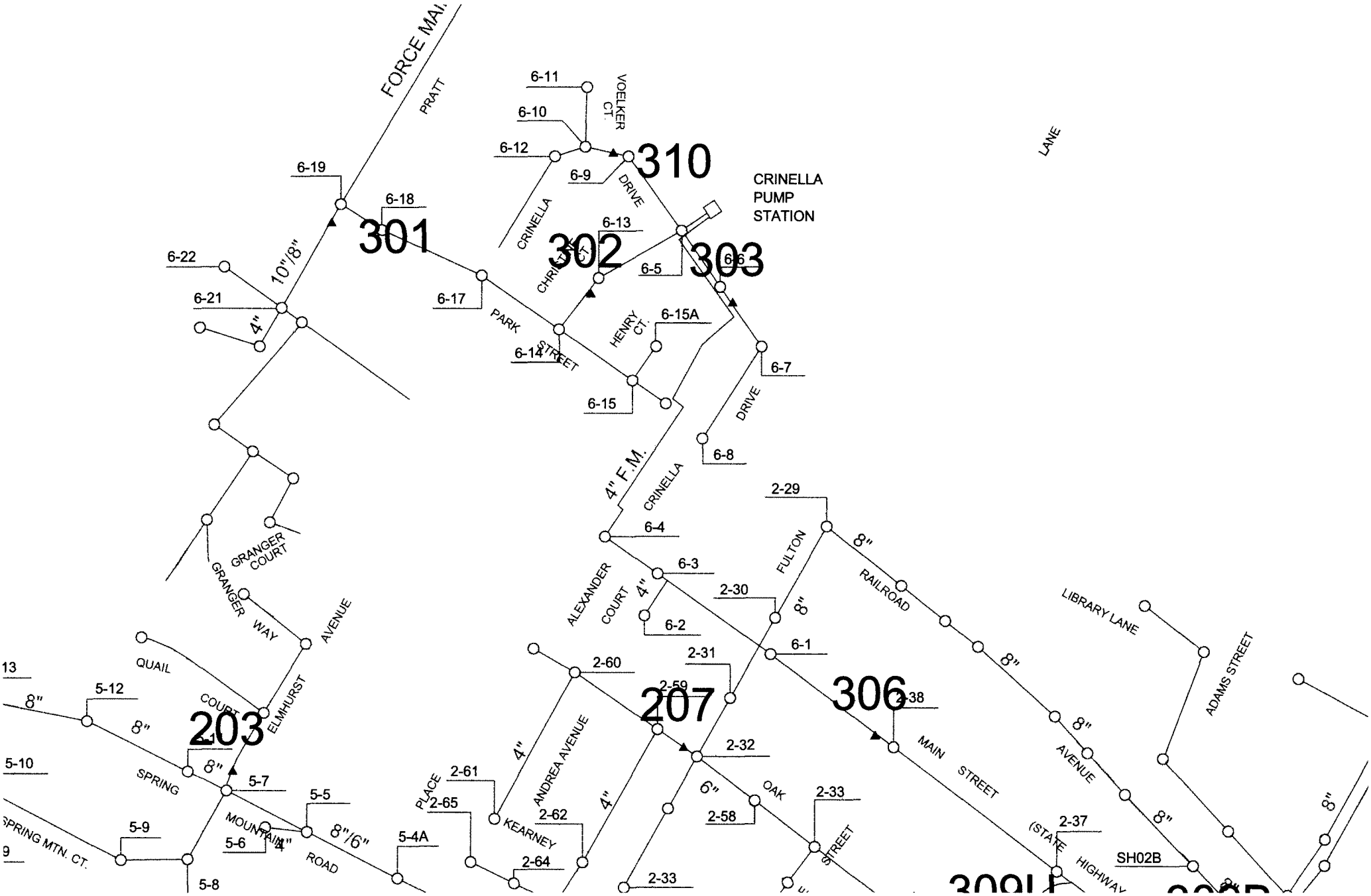
FORCE MAIN
PRATT
6-11
6-10
6-12
VOELKER CT.
310
6-9
DRIVE
CRINELLA
CRINELLA PUMP STATION
LANE
6-19
6-18
301
302
6-13
6-5
303
6-6
6-22
10"/8"
6-21
4"
6-17
PARK
STREET
6-14
HENRY CT.
6-15A
6-15
6-7
DRIVE
6-8
4" F.M.
CRINELLA
6-4
2-29
FULTON
8"
RAILROAD
GRANGER COURT
GRANGER WAY
AVENUE
ALEXANDER COURT
6-3
4"
6-2
2-30
8"
6-1
LIBRARY LANE
ADAMS STREET
QUAIL COURT
ELMHURST
13
5-12
8"
203
2-60
2-31
207
306
2-38
8"
5-10
SPRING
5-7
2-32
MAIN STREET
AVENUE
PLACE
2-61
4"
ANDREA AVENUE
2-65
KEARNEY
2-62
4"
6"
OAK
2-33
2-58
STREET
5-5
5-9
MOUNTAIN
5-6
4"
8"/6"
5-4A
ROAD
2-64
2-33
2-37
(STATE HIGHWAY
SH02B
SPRING MTN. CT.
9
5-8
309B

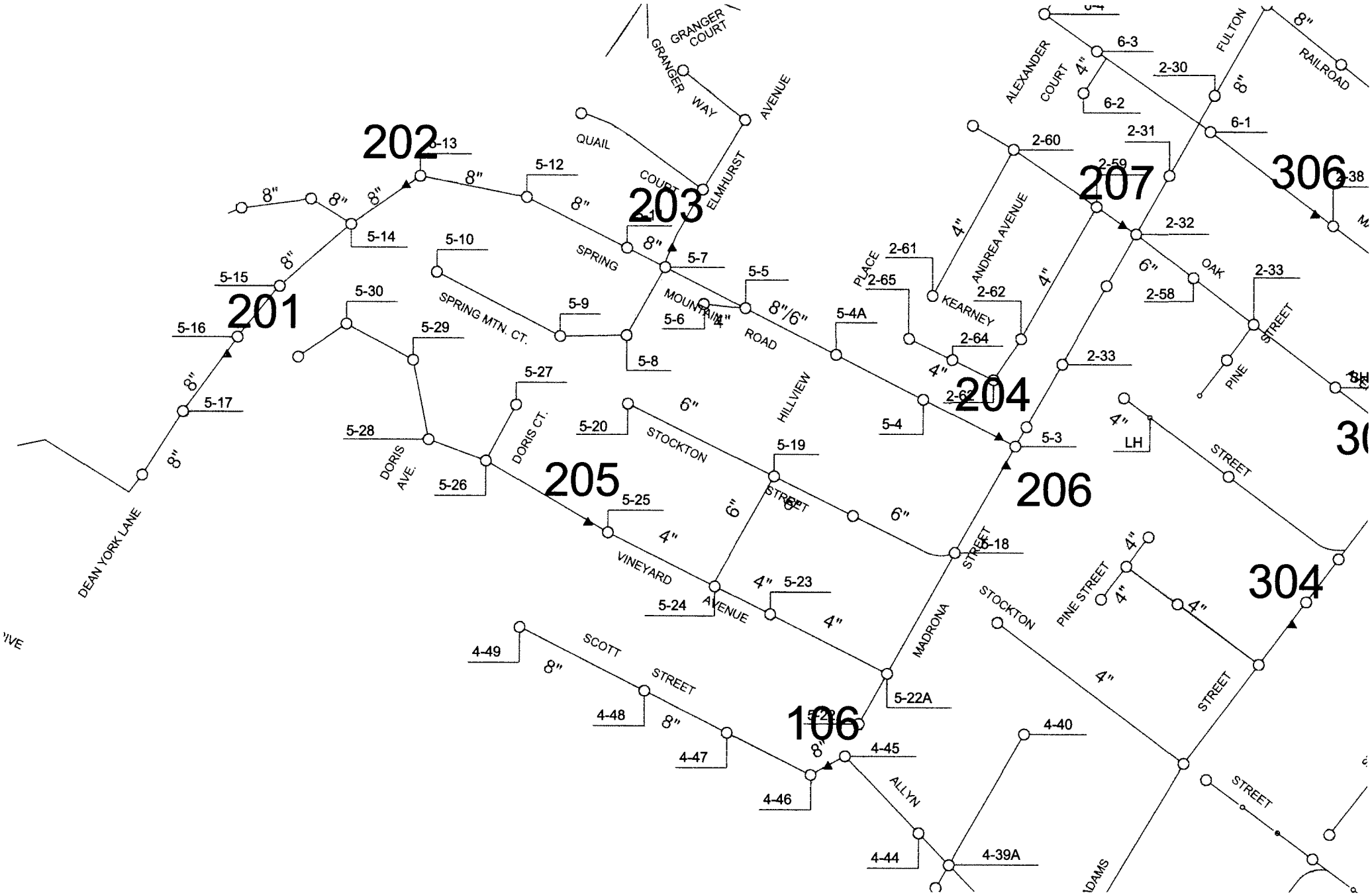
202
203
201
204
205
206
207
306
304
106
GRANGER COURT
GRANGER WAY
AVENUE
QUAIL
COURT
ELMHURST
SPRING
MOUNTAIN
ROAD
SPRING MTN. CT.
HILLVIEW
STOCKTON
STREET
DORIS AVE.
DORIS CT.
VINEYARD
AVENUE
DEAN YORK LANE
SCOTT
STREET
ALLYN
MADRONA
STOCKTON
PINE STREET
STREET
ALEXANDER
COURT
FULTON
RAILROAD
PLACE
KEARNEY
ANDREA AVENUE
OAK
PINE
STREET
LH
STREET
STREET
ADAMS
5-13
5-12
5-14
5-15
5-16
5-17
5-10
5-30
5-29
5-28
5-27
5-26
5-9
5-8
5-7
5-6
5-5
5-4A
5-4
5-3
5-20
5-19
5-25
5-24
5-23
5-18
5-22A
4-49
4-48
4-47
4-46
4-45
4-44
4-40
4-39A
6-3
6-2
6-1
2-30
2-31
2-60
2-59
2-32
2-61
2-65
2-62
2-64
2-33
2-58
2-38
8"
6"
4"
8"/6"

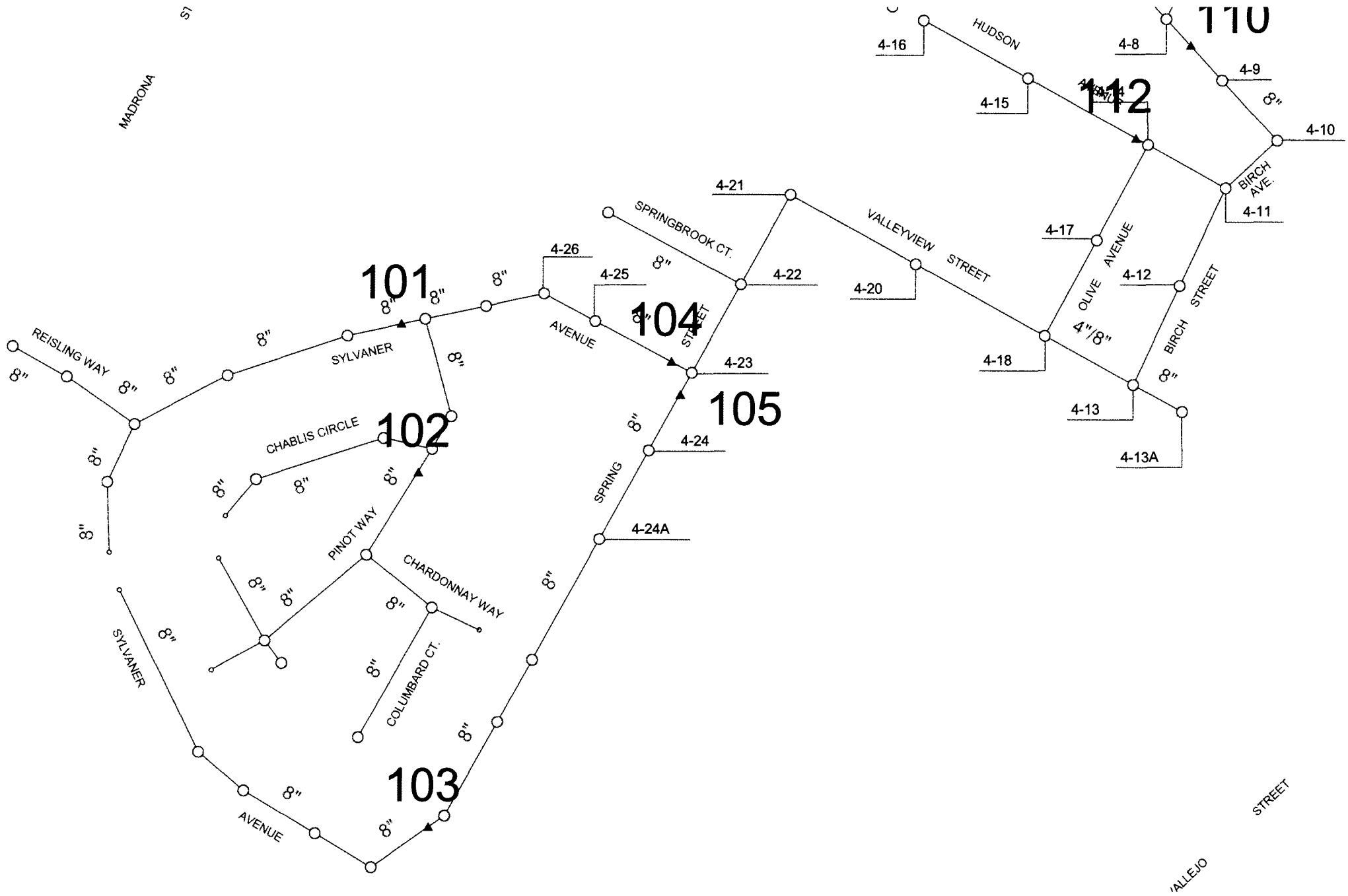
MADRONA
ST
REISLING WAY
SYLVANER
101
102
CHABLIS CIRCLE
PINOT WAY
CHARDONNAY WAY
COLUMBARD CT.
SYLVANER
AVENUE
103
SPRING
STREET
104
105
AVENUE
SPRINGBROOK CT.
VALLEYVIEW STREET
HUDSON
112
110
OLIVE AVENUE
BIRCH STREET
BIRCH AVE.
4"/8"
4-8
4-9
4-10
4-11
4-12
4-13
4-13A
4-15
4-16
4-17
4-18
4-20
4-21
4-22
4-23
4-24
4-24A
4-25
4-26
8"
STREET
'ALLEJO

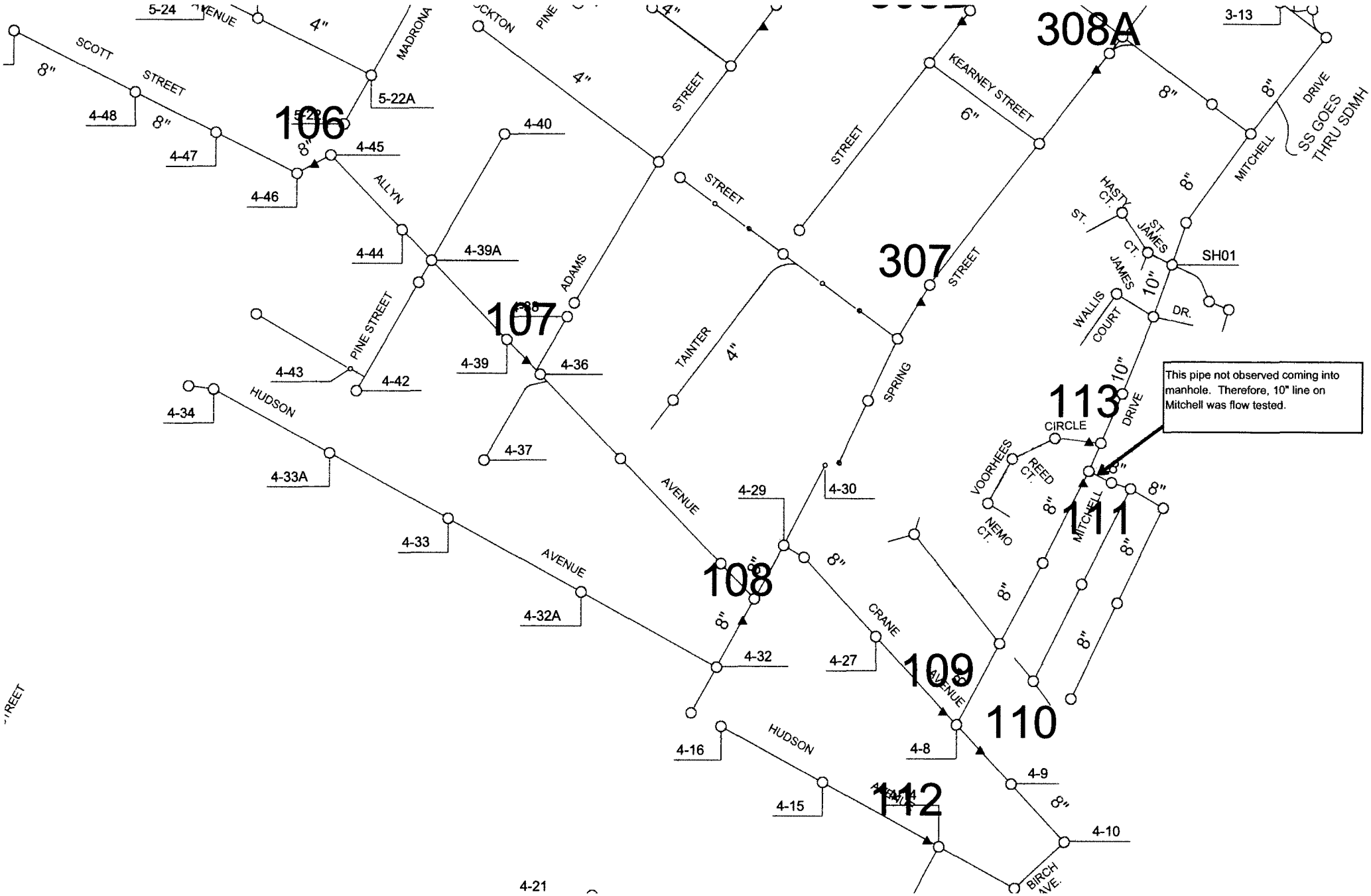
308A
307
106
107
108
109
110
111
112
113
SCOTT STREET
MADRONA
ALLYN
PINE STREET
HUDSON
AVENUE
ADAMS
TAINTER
STREET
KEARNEY STREET
SPRING
CRANE
AVENUE
HUDSON
MITCHELL
DRIVE
SS GOES THRU SDMH
HASTY CT.
ST. JAMES CT.
JAMES DR.
WALLIS COURT
CIRCLE
VOORHEES
REED CT.
NEMO CT.
BIRCH AVE.
SH01
This pipe not observed coming into manhole. Therefore, 10" line on Mitchell was flow tested.
5-24
5-22A
4-48
4-47
4-46
4-45
4-44
4-43
4-42
4-40
4-39A
4-39
4-36
4-37
4-34
4-33A
4-33
4-32A
4-32
4-29
4-30
4-27
4-16
4-15
4-8
4-9
4-10
3-13
4-21
8"
4"
6"
10"

Manhole Surveys

City of St. Helena
Man Hole Survey

MH #	MH Location	MH Depth	Pipe size In-Out	Type of pipe	Distance to downstream MH
1-12	Pope St at Pope St Bridge				
1-13					
1-14	College Ave & Pope St				
1-15	Peppertree Cir & Pope St				
1-16	Pope St				
1-17	Pope St. 605				
1-17A	Pope St. & Starr Ave				
1-18	Pope St 601 east prop. Line				
1-19	Pope St 601 (West Prop. Line in driveway)				
1-20	Pope St 601 (east prop. line in backyard)				
1-21	Granda Ct 764 (inside yard next to sidewalk)				
1-22	Granda Ct 751				
1-23	Granda Ct. (couldn't find)				
1-24	Granda Ct. 763				
1-25	Mariposa & Pope St.				
1-26	Granda Ct. & Mariposa				
1-27	Mariposa 932				
1-28	Mariposa 923 (in driveway)				
1-28A	Mariposa 923 (in driveway)				
129	Mariposa & McCorkle				
1-29A	McCorkle Ave 714				
1-30	Allison Ave & Pope St.				
1-31	Allison Ave & Brown St				
1-32	Brown St. 972				
1-33	Allison Ave & McCorkle Ave				
1-34	McCorkle Ave 960				
1-35	McCorkle Ave 963				
1-36	Allison Ave & Charter Oak Ave				
1-37	Charter Oak Ave 1026				
1-37A	Charter Oak Ave 942				
1-38	Charter Oak Ave 1050				
1-38A	Charter Oak Ave 1050				
1-39	Main St. 801				
1-40	Main St. 789				
2-01	Hunts Grove & Mobilehome Park				
2-02	Hunts Grove				
2-03	Hunt Ave & Starr Ave				

City of St. Helena
Man Hole Survey

	MH Location	MH Depth	Pipe size In-Out	Type of pipe	Distance to downstream MH
2-05	Hunt Ave & Starr Ave				
2-06	Hunt Ave 709				
2-07	Hunt Ave & Monte Vista				
2-08	Hunt Ave & Monte Vista				
2-09	Monte Vista (end of street in circle)				
2-10	Grove Ct & Hunt Ave				
2-11	Hunt Ave 906				
2-12	Edwards St & Hunt Ave				
2-13	Hunt Ave Safeway Driveway				
2-14	Church St & Hunt Ave				
2-15	Safeway parking lot				
2-16	Safeway parking lot (north side)				
2-17	Grove Ct & Hunt Ave				
2-18	Hunt Ave 921				
2-18A	Hunt Ave 867				
2-18B	Hunt Ave 829				
2-18C	Hunt Ave 765				
2-19	Hunt Ave 943				
2-20	Hunt Ave 1017				
2-21	Hunt Ave & Railroad Ave				
2-22	Hunt Ave & Railroad Ave				
2-23	Railroad Ave 1327				
2-24	Railroad Ave 1345				
2-25	Adams St & Railroad Ave				
2-26	Railroad Ave 1461				
2-26A	Railroad Ave 1417				
2-27	Railroad Ave at Fire House				
2-28	Railroad Ave 1547				
2-29	Fulton Ave & Railroad Ave				
2-30	Fulton Ave				
2-31	Madrona Ave 1220				
2-32	Madrona Ave & Oak Ave				211'
2-33	Madrona Ave 1330				
2-34	Hunt Ave & Main St				
2-35	Main St 1331				
2-36	Main St 1338 (clean out)				
2-37	Adams St & Main St				
2-38	Main St & Pine St				

City of St. Helena
Man Hole Survey

	MH Location	MH Depth	Pipe size In-Out	Type of pipe	Distance to downstream MH
2-40	Adams St & Oak Ave				
2-41	Adams St & Kearney St				
2-42	Kearney St 1459				
2-44	Kearney St 1519				
2-45	Adams St 1410				
2-46	Pine St (alley between pine & Adams)				
2-46A	Pine St (alley between pine & Adams)				
2-47	Pine St 1515 (Alley)				
2-48	Pine St 1515 (clean out)				
2-49	Pine St 1540 (clean out)				
2-50	Adams St 1518				
2-51	Adams St & Stockton St				
2-52	Stockton St 1515				
2-53	Adams St 1706 (clean out)				
2-54	Oak Ave 1445	5'10	6"x6"	Clay	
2-55	Oak & Pine	5'	6"x6"	clay	293'
2-56	Pine St. 1325				
2-57	Pine St. 1337 (clean out)				
2-58	Oak Ave 1532	5'6"	6" x 6"	Clay	195'
2-59	Oak Ave 1621				
2-60	Oak Ave 1745				
2-62	Kearney St. 1650				
2-63	Madrona Ave 1420 (back yard)				
2-64	Spring Mt Rd (back yard)				
2-65	Spring Mt Rd 1656 (back yard)				
3-03	Pope St 924				
3-04	Edwards St & Pope St				
3-05	Church St & Pope St				
3-05A	Pope St (between R/R tracks & Church St)				
3-06	Pope St 924				
3-07	Pope St 924				
3-08	Edwards St & Pope St				
3-08A	Edwards St 1150				
3-09	Edwards St 1220				
3-10	Church St & Pope St				
3-11	Church St 3-10				
3-12	Main St & Pope St (on Pope St)				

City of St. Helena
Man Hole Survey

	MH Location	MH Depth	Pipe size In-Out	Type of pipe	Distance to downstream MH
3-12A	Main St & Pope St (on Main St)				
3-13	Main St 1111				
3-14	Main St & Spring St				
3-15	Main St & Mitchell Dr				
3-16	Mitchell Dr between Main St 7 Oak Ave				
3-17	Mitchell Dr between Main St 7 Oak Ave				
3-18	Mitchell Dr & Oak Ave				
3-19	Mitchell Dr 1340				
3-20	Mitchell Dr & St James Cir				
3-21	Oak ave 1111				
3-22	Oak Ave & Spring St				
3-23	Oak Ave & Tainter St				
3-24	Tainter St 1340				
3-25	Kearney St & Tainter St				
3-26	Tainter St 1550				
3-27	Oak Ave & Spring St (@10' west of oak)				
3-27A	Kearney St & Spring St				
3-28	Spring St 1515				
3-29	Spring St & Stockton St				
3-30	Spring St 1640				
3-31	Spring St. 1712 (cleanout)				
3-32	Stockton St 1213				
3-33	Stockton St 1240 (cleanout)				
3-34	Stockton St & Tainter				
3-35	Stockton St 1318 (cleanout)				
3-36	Stockton St. 1334 (cleanout)				
3-37	Adams St 1611 Manhole on Stockton				
3-38	Tainter St 1714				
4-01	Mitchell Dr & St James Cir				
4-02	Mitchell Dr. at bridge				
4-03	Mitchell Dr & Voorhees Cir				
4-04					
4-05	Mitchell Dr & Voorhees Cir				
4-06	Voorhees Cir 1554 (in backyard)				
4-07	Voorhees Cir (in Baldwin Park)				
4-08	Mitchell Dr & North Crane Ave				
4-09	North Crane Ave 969				
4-10	Birch St & North Crane				

City of St. Helena
Man Hole Survey

	MH Location	MH Depth	Pipe size In-Out	Type of pipe	Distance to downstream MH
4-11	Birch St & Hudson Ave				
4-12	Birch St 2020				
4-13	Birch St & Valley View St				
4-13A	Valley View Ave 945				
4-14	Hudson Ave & Olive Ave				
4-15	Hudson Ave1154				
4-16	Hudson Ave 1190				
4-17	Olive Ave 2021				
4-18	Olive Ave & Valley View St				
4-19	Valley View St 1094				
4-20	Valley View St 1181				
4-22	Spring St 2090				
4-22A	Spring Brook Ct (end)				
4-22B	Spring St & Spring Brook Ct				
4-23	Spring St & Sylvaner Ave				
4-24	Spring St 2222				
4-24A	Spring St 2322				
4-25	Sylvaner Ave 1290				
4-26	Sylvaner Ave 1317				
4-27	North Crane Ave 1096				
4-28	Spring St 1735 (manhole on North Crane Ave)				
4-29	North Crane Ave & Spring St				
4-30	Spring St 1712 (cleanout)				
4-31	Allyn Ave & Spring St				
4-31A	Spring St 1922				
4-32	Hudson Ave & Spring St.				
4-32A	Hudson Ave 1256				
4-32B	Hudson Ave 1256				
4-33	Adams St & Hudson Ave				
4-33A	Hudson Ave & Pine St				
4-34	Hudson 1544				
4-35	Allyn 1217				
4-35A	Allyn Ave & Tainter St				
4-36	Adams St & Allyn Ave				
4-37	Adams 1829				
4-38	Adams St 1717 (cleanout)				
4-39	Allyn Ave 1416				
4-39A	Allyn ave & Pine St				

City of St. Helena
Man Hole Survey

	MH Location	MH Depth	Pipe size In-Out	Type of pipe	Distance to downstream MH
4-40	Pine St 1701				
4-41	Pine St (@ 25' west of Allyn Ave)				
4-42	Pine St 1849				
4-43	Pine St 1837 (cleanout in sidewalk)				
4-44	Allyn Ave 1556 (cleanout)				
4-45	Allyn Ave & Madrona Ave				
4-46	Madrona Ave & Scott St				
4-47	Scott St 1636				
4-48	Hillview PL & Scott St				
4-49	Scott St 1770				
5-01	Kearney St & Madrona Ave				
5-02	Madrona Ave 1480				
5-03	Madrona Ave & Spring Mt Rd				
5-04	Spring Mt Rd 1651				
5-04A	Hillview Pl & Spring Mt Rd				
5-05	Spring Mt Rd 1759				
5-06	Spring Mt Rd 1777 (in Gutter)				
5-07	Elm Hurst Ave & Spring Mt Rd				
5-08	Elm Hurst Ave 1521 (West of Spring Mt Rd)				
5-09	Spring Mt Ct 1806				
5-10	Spring Mt Ct 1837				
5-11	Spring Mt Rd 1820				
5-12	Spring Mt Rd 1861				
5-13	Spring Mt Rd 1975				
5-14	Dean York Ln 1591				
5-15	Dean York Ln 1600				
5-16	Dean York Ln 1704				
5-17	Dean York Ave 1740				
5-17A	Dean York Ave 1740				
5-18	Madrona Ave & Stockton St				
5-19	Hillview Pl & Stockton St				
5-19A	Stockton St 1638				
5-20	Stockton St 1761				
5-21	Hillview Pl (mid block REMOVED)				
5-22	Madrona Ave 1722 (cleanout)				
5-22A	Madrona Ave & Vineyard Ave				
5-23	Vineyard Ave 1633				
5-24	Hillview Pl & Vineyard Ave				

City of St. Helena
Man Hole Survey

	MH Location	MH Depth	Pipe size In-Out	Type of pipe	Distance to downstream MH
5-25	Vineyard Ave 1797				
5-26	Doris Ct & Vineyard Ave				
5-27	Doris Ct 1611 (cleanout)				
5-28	Doris Ave & Vineyard Ave				
5-29	Vineyard Ave 1932				
5-30	Vineyard Ave 1964				
5-31	Vineyard Ave 1969				
6-01	Madrona Ave & Main St				
6-02	Alexander Ct & Main St				
6-03	Main St 1648				
6-04	Crinella Dr & Main St				
6-04A	Main St at Crinella ??				
6-05	Crinella Dr (at pumphouse)				
6-05A	Crinella Dr 1759				
6-06	Crinella Dr 1726				
6-07	Crinella Dr 1045				
6-08	Crinella Dr 1095				
6-09	Crinella Dr 1782				
6-10	Crinell Dr & Volker Ct				
6-11	Volker Ct 31				
6-12	Crinella Dr 1808				
6-13	Christine Ct 24				
6-14	Christine Ct& Park St				
6-15	Henery Ct & Park St				
6-15A	Henery Ct 24 (cleanout)				
6-16	Park St 1707 (cleanout)				
6-17	Crinella Dr & Park St				
6-18	Park St 1832 (cleanout)				
6-19	Park St & Pratt Ave				
6-20	Main St & Pratt Ave (on Pratt Ave)				
6-21	Main St & Pratt Ave (on Main St)				
6-21A	Main St 1855				
6-22	Main St 1915				
6-23	Main St 1915				
6-24	Main St 1915				

CITY OF ST. HELENA

SANITARY SEWER MANHOLE SURVEY

MARCH 1991

Manhole #/ Location	Date	Line Size In	Line Size Out	Flow in Inches	Depth of Manhole Flow to Street Level	Condition of Manhole
CHARTER OAK & MAIN 1-39	3-13-91	6"	6"	1/2"	4'	GOOD
CHARTER OAK TRAVIGNE 1-38	" "	6"	6"	1/2"	6'2"	GOOD
CHARTER OAK 1027 1-38A	" "	6"	6"	1/2"	5'9"	GOOD
CHARTER OAK 942 1-37	" "	6"	6"	1/2"	5'6"	GOOD
CHARTER OAK & ALLISON 1-36	" "	6"	6"	1"	5'3"	GOOD
ALLISON & McCORKLE 1-33	" "	6"	6"	1/2"	6'	GOOD
McCORKLE 962 1-35	" "	4"	4"	0	2'4"	GOOD
ALLISON & BROWN 1-31	" "	6"	6"	1/2"	6'4"	GOOD
ALLISON & POPE 1-30	" "	6"	12"	3"	9'	GOOD
POPE & MARIPOSA 1-25	" "	12"	12"	1"	8'	GOOD
MARIPOSA GRANADA 1-26	" "	8"	8"	0"	5'4"	GOOD
GRANADA 751 1-24	" "	4"	4"	0	4'	GOOD
MARIPOSA 933 1-27	" "	8"	8"	0	4'	GOOD
MARIPOSA McCORKLE 1-29	" "	8"	8"	0	6'	GOOD
NEW McCORKLE 1-29A	" "	6"	6"	0	CLEAN OUT	GOOD
POPE STRALLA 1-19	" "	12"	12"	1"	7'6"	GOOD
POPE 610 1-18	" "	12"	12"	2"	7'2"	GOOD
POPE 610 1-17	" "	12"	12"	2"	7'2"	GOOD
POPE 605 1-16	" "	12"	12"	2"	7'	GOOD
POPE 456 1-15	" "	12"	12"	2"	6'3"	GOOD

CITY OF ST. HELENA

SANITARY SEWER MANHOLE SURVEY

MARCH 1991

Manhole #/ Location	Date	Line Size In	Line Size Out	Flow in Inches	Depth of Manhole Flow to Street Level	Condition of Manhole
POPE - ACROSS MOBILE PK	3-13-91	12"	12"	2"	6'	GOOD
POPE GRANDE DR. 1-14	" "	12"	18"	5"	20'	GOOD - STEPS
SYLVANER 1645 4-26	" "	6"	6"	2"	5'5"	GOOD
SYLVANER 1675 4-25	" "	6"	6"	2"	5'	GOOD
SPRING ST 4-24A	" "					MAN HOLES COVERED
SPRING ST 4-24	" "					" " "
SPRING ST & SYLVANER 4-23	" "	6"	6"	½"	5'7"	GOOD
SPRING ST 2660 4-22	" "	6"	6"	½"	5'	GOOD
SPRING ST & CALVARY CHURCH	" "	6"	6"	½"	7'	GOOD
SPRING ST 2222	" "	6"	6"	½"	6'	GOOD
SPRING BROOK CT 1250	" "	6"	6"	½"	5'3"	GOOD
SPRING BROOK CT SPRING.	" "	6"	6"	4"	5'8"	GOOD
SPRING & VALLEY VIEW 4-21	" "	6"	6"	2"	5'	GOOD
VALLEY VIEW 1180 4-20	" "	6"	6"	4"	4'6"	GOOD
VALLEY VIEW 1094 4-19	" "	6"	6"	3"	4'6"	GOOD
VALLEY VIEW & OLIVE 993 4-18	" "	6"	6"	3"	4'2"	GOOD
VALLEY VIEW & BIRCH 957 4-13	" "	6"	8"	2"	4'3"	GOOD
OLIVE 2011 4-17	" "	6"	6"	1"	4'	GOOD
BIRCH 2020 4-12	" "	8"	8"	2"	4'	GOOD
HUDSON 4-16						MAN HOLE COVERED

CITY OF ST. HELENA

SANITARY SEWER MANHOLE SURVEY

MARCH 1991

Manhole #/ Location	Date	Line Size In	Line Size Out	Flow in Inches	Depth of Manhole Flow to Street Level	Condition of Manhole
HUDSON 1155, 4-15	3-13-91	6"	6"	1"	3'	GOOD
HUDSON & OLIVE, 4-14	" "	6"	6"	1"	3'5"	GOOD
HUDSON & BIRCH, 4-11	" "	6"	8"	3"	3'10"	GOOD
CRANE & BIRCH, 4-10	" "	8"	8"	5"	4'2"	GOOD
CRANE & 970, 4-9	" "	8"	8"	3"	6'	GOOD
CRANE & MITCHELL, 4-8	" "	8"	8"	4"	6'4"	GOOD
MITCHELL & VOORHEES 4-5	" "	8"	10"	4"	6'	GOOD
MITCHELL ACROSS FIELD 4-4	" "	10"	10"	4"	4'4"	GOOD
MITCHELL VOORHEES CIR. 4-3	" "	10"	10"	4"	5'7"	GOOD
MITCHELL ACROSS CREEK 4-2	" "	10"	8"	4"	4'2"	GOOD - STEPS
MITCHELL ACROSS WALLIS CT. 4-1	" "	8"	8"	4"	6'6"	GOOD
MITCHELL AT ST. JAMES CT. 3-20	" "	8"	8"	4"	5'	GOOD
MITCHELL 1340, 3-19	" "	8"	8"	6"	4'	GOOD
MITCHELL & OAK 3-18	" "	8"	8"	6"	4'	GOOD
MITCHELL 3-17 3-16	" "					STORM DRAINS
MITCHELL MAIN 3-15	3-13-91	8"	8"	3"	3'7"	GOOD
MAIN POPE, 3-12	" "	8"	8"	11"	6'	GOOD
POPE & CHURCH 999, 3-5A	" "	8"	8"	3"	3'5"	GOOD
POPE & CHURCH 1120 3-5	" "	8"	8"	3"	3'5"	GOOD
POPE 917 3-3	" "	8"	8"	4"	3'5"	GOOD

CITY OF ST. HELENA

SANITARY SEWER MANHOLE SURVEY

MARCH 1991

Manhole #/ Location	Date	Line Size In	Line Size Out	Flow in Inches	Depth of Manhole Flow to Street Level	Condition of Manhole
COLOMBARD 2659	3-14-91	6"	6"	1"	4'5"	GOOD + STEPS
CHARDONNAY WAY 1655	" "	6"	6"	1"	4'5"	GOOD
PINOT 2620	" "	6"	6"	½"	5'	GOOD STEPS
PINOT 2590	" "	6"	6"	1"	5'	GOOD STEPS
CHABLIS CR. 1538	" "	6"	6"	½"	5'	GOOD + STEPS
CHABLIS CR 1506	" "					CAR ON MAN HOLE
PINOT & CHABLIS CR 2543	" "	6"	6"	1"	5'5"	GOOD + STEPS
PINOT 2529	" "					MAN HOLE PAVED
SYLVANER 1517	" "	6"	6"	½"	5'3"	GOOD + STEPS
SYLVANER 1501	" "	6"	6"	1"	9'6"	GOOD
SYLVANER 1434	" "	6"	6"	½"	5'4"	GOOD
SYLVANER 1401	" "	6"	6"	½"	5'5"	GOOD
SYLVANER 1362	" "	6"	6"	2½"	6'	GOOD
SYLVANER 1317	" "	6"	6"	2"	5'5"	GOOD
SYLVANER 1291	" "	6"	6"	2"	5'5"	GOOD
HUDSON & MADRONA 1544, 4-34	" "	4"	4"	0	5'	GOOD
HUDSON & PINE 4-33A	" "	4"	6"	½"	5'6"	GOOD
HUDSON & ADAMS, 4-33	" "	6"	6"	½"	5'6"	GOOD
HUDSON & SPRING, 4-32	" "	6"	6"	1"	5'7"	GOOD + STEPS
SPRING & ALLYN 4-31	" "	6"	6"	4"	6'8"	GOOD

CITY OF ST. HELENA

SANITARY SEWER MANHOLE SURVEY

MARCH 1991

Manhole #/ Location		Date	Line Size In	Line Size Out	Flow in Inches	Depth of Manhole Flow to Street Level	Condition of Manhole
SPRING & CRANE	4-29	3-14-91	8"	8"	4"	6'7"	LEAK EAST SIDE
CRANE 1735	4-28	" "	8"	8"	3"	7'	GOOD
CRANE 1096	4-27	" "	8"	8"	4"	7'3"	LEAKS / 1 EAST / 1 WEST
SCOTT 1761	4-49	" "	8"	8"	½"	8'	GOOD
SCOTT HILLVIEW	4-48	" "	8"	8"	1"	8'	GOOD
SCOTT 1629	4-47	" "	8"	8"	½"	8'	GOOD
SCOTT & MADRONA	4-46	" "	8"	8"	½"	5'3"	GOOD
ALLYN MADRONA	4-45	" "	8"	8"	1½"	4'7"	GOOD
PINE	4-40	" "					
PINE 1853	4-42	" "	6"	6"	0	2'	GOOD
ALLYN & PINE	4-39A	" "	8"	6"	2"	4'	GOOD
ALLYN 1416	4-39	" "	6"	6"	2"	3'8"	GOOD
ADAMS	4-37	" "					
ALLYN & ADAMS	4-36	" "	6"	6"	2"	4'8"	GOOD
ADAMS	4-38	" "					
ALLYN 1301	4-35A	" "	6"	6"	2"	4'3"	GOOD GAS PIPE
VINEYARD 1964	5-30	" "	4"	4"	½"	3'7"	GOOD
VINEYARD 1924	5-29	" "	4"	6"	½"	4'	GOOD
VINEYARD DORIS AVE	5-28	" "	6"	6"	½"	8'5"	GOOD
VINEYARD	5-26	" "	6"	6"	½"	8'5"	GOOD

CITY OF ST. HELENA

SANITARY SEWER MANHOLE SURVEY

MARCH 1991

Manhole #/ Location	Date	Line Size In	Line Size Out	Flow in Inches	Depth of Manhole Flow to Street Level	Condition of Manhole
VINEYARD HILLVIEW 5-24	3-14-91	6"	6"	½"	6'	GOOD
VINEYARD 1638 5-23	" "	6"	6"	3"	4'6"	GOOD
MADRONA VINEYARD 5-22A	" "	6"	6"	½"	5'	GOOD
STOCKTON 1765 5-20	" "	4"	4"	½"	4'3"	GOOD
STOCKTON HILLVIEW 5-19	" "	4"	6"	1"	4'5"	GOOD
MADRONA STOCKTON 5-18	" "	6"	6"	2"	4'	GOOD
DEAN YORK 1740 5-17	" "	8"	8"	Ø	9'	GOOD
DEAN YORK 1704 5-16	" "	8"	8"	Ø	9'	GOOD
DEAN YORK 1600 5-15	" "	8"	8"	Ø	9'	GOOD
DEAN YORK 1581 5-14	" "	8"	8"	Ø	12'	GOOD
SPRING MT RD 2150	" "	6"	8"	Ø	5'	GOOD
SPRING MT RD DEAN YORK 5-13	" "	8"	8"	1"	12'	GOOD
SPRING MT CT 1843 5-10	" "	6"	6"	½"	5'6"	GOOD
SPRING MT CT 1800 5-9	" "	6"	6"	½"	5'5"	GOOD
SPRING MT ALLEY WY. 1521 5-8	" "	6"	6"	½"	5'4"	GOOD
SPRING MT RD 1861 5-12	" "	8"	8"	2"	8'4"	GOOD
SPRING MT RD 1850 5-11	" "	8"	8"	2"	8'4"	GOOD
SPRING MT RD ELMHURST 5-7	" "	8"	8"	1"	7'2"	GOOD
SPRING MT RD 1775 5-6	" "	4"	8"	Ø	2'	GOOD
SPRING MT RD 1709 5-5	" "	8"	6"	2"	4'2"	GOOD

CITY OF ST. HELENA

SANITARY SEWER MANHOLE SURVEY

MARCH 1991

Manhole #/ Location	Date	Line Size In	Line Size Out	Flow in Inches	Depth of Manhole Flow to Street Level	Condition of Manhole
SPRING MT RD HILLVIEW 5-4A	3/14/91	6"	6"	1/2"	4'7"	LEAKS 1-NORTH 1WEST
SPRING MT RD 1650 5-4	" "	6"	6"	1/2"	4'7"	GOOD
SPRING MT RD MADRONA 5-3	" "	6"	6"	1"	3'6"	GOOD
MADRONA 1420 5-2	" "	6"	6"	4"	4'	GOOD
MADRONA KEARNY 5-1	" "	6"	6"	4"	4'3"	GOOD
MADRONA 1330 2-33	" "	6"	6"	4"	4'9"	GOOD
MADRONA OAK 2-32	" "	6"	6"	4"	5'5"	GOOD
MADRONA 2-31	" "	6"	6"	4"	5'3"	GOOD
FULTON 1136 2-30	" "	6"	6"	3"	4'7"	GOOD
FULTON RAILROAD 2-29	" "	6"	6"	3"	3'6"	GOOD
RAILROAD 1547 2-28	" "	6"	6"	3"	3'3"	GOOD
RAILROAD PINE 2-27	" "	6"	6"	3"	4'1"	GOOD
RAILROAD BEHIND MORTUARY 2-26	" "	6"	6"	3"	4'1"	GOOD
RAILROAD ADAMS 2-25	" "	6"	6"	3"	3'8"	GOOD
RAILROAD 1345 2-24	" "	6"	6"	3"	3'7"	GOOD
RAILROAD HUNT 2-22	" "	6"	6"	3"	3'6"	GOOD
STOCKTON 1516 2-52	" "	4"	4"	Ø	4'6"	GOOD
STOCKTON ADAMS 2-51	" "	4"	6"	1/2"	4'	GOOD
PINE 1325 2-47	" "	4"	4"	1/2"	5'	GOOD
PINE-ALLEY AT ADAMS 2-46	" "	4"	6"	1/2"	2 1/2"	GOOD

CITY OF ST. HELENA

SANITARY SEWER MANHOLE SURVEY

MARCH 1991

Manhole #/ Location		Date	Line Size In	Line Size Out	Flow in Inches	Depth of Manhole Flow to Street Level	Condition of Manhole
KEARNY	2-44	3-15-91	4"	6"	½"	2'	GOOD
KEARNY PINE	2-43	" "	6"	6"	½"	2'	GOOD
ADAMS 1518	2-50	" "	6"	6"	½"	4'1"	GOOD
ADAMS 1410	2-45	" "	6"	6"	3"	3'9"	GOOD
ADAMS KEARNY	2-41	" "	6"	6"	3"	4'6"	GOOD
ADAMS 1224	2-39	" "	6"	6"	3"	6'2"	GOOD
TAINTER 1714	3-38	" "	4"	4"	1"	3'2"	GOOD
STOCKTON 1348	3-37	" "				4'6"	BALL
TAINTER 1550	3-26	" "	~~4"~~ 6"	~~4"~~ 6"	1"/3"	2'8"	GOOD
TAINTER 1413	3-25	" "	~~4"~~	~~4"~~	1"	2'8"	GOOD
TAINTER CATHOLIC CH.	3-24	" "	~~4"~~	~~4"~~	1"	2'8"	GOOD
SPRING STOCKTON	3-29	" "	6"	6"	½"	7'2"	GOOD
SPRING 1520	3-28	" "	6"	6"	2"	7'6"	GOOD
SPRING 1401	3-27A	" "	6"	6"	2"	4'2"	GOOD
SPRING OAK	3-27	" "	6"	8"	2"	3'4"	GOOD
KEARNY TO OAK	2-61	" "	4"	6"	½"	2'	GOOD
KEARNY TO OAK	2-62	" "	4"	6"	½"	2'	GOOD
OAK 1745	2-60	" "	6"	6"	½"	2'	GOOD
OAK 1621	2-59	" "	6"	6"	1"	4'3"	GOOD
OAK 1532	2-58	" "	6"	6"	½"	5'3"	LEAK W. BOTTOM

CITY OF ST. HELENA

SANITARY SEWER MANHOLE SURVEY

MARCH 1991

Manhole #/ Location		Date	Line Size In	Line Size Out	Flow in Inches	Depth of Manhole Flow to Street Level	Condition of Manhole
OAK PINE	2-55	3-15-91	6"	6"	2"	5'4"	GOOD
OAK 1445	2-54	" "	6"	6"	3"	5'6"	GOOD
OAK ADAMS	2-40	" "	6"	6"	4"	3'7"	GOOD
OAK TAINTER	3-23	" "	6"	6"	4"	3'7"	GOOD
OAK SPRING	3-22	" "	6"	8"	2"	3'4"	GOOD
OAK 1111	3-21	" "	8"	8"	4"	2'5"	GOOD
MAIN 1915	6-22	" "	8"	8"	2"	15'	GOOD
MAIN	6-21	" "					COVERED
PRATT MAIN	6-20	" "	8"	8"	2"	10'	GOOD
PRATT PARK	6-19	" "	8"	6"	4"	8'5	GOOD
PARK 1807	6-17	" "	6"	6"	3"	5'5"	LEAK S. SIDE STEPS
PARK 1747	6-14	" "	6"	6"	2"	6'3"	LEAK E. SIDE STEPS
PARK 1723	6-15	" "	6"	6"	1"	5'4"	LEAK W. SIDE STEPS
CRINELLA 1095	6-8	" "	6"	6"	½"	3'8"	GOOD
CRINELLA 1045	6-7	" "	6"	6"	½"	4'2"	GOOD
CRINELLA 1726	6-6	" "	6"	6"	½"	3'8"	GOOD
CRINELLA 1759	6-5	" "	6"	6"	4"	4'3"	GOOD
CRINELLA 1808	6-12	" "	6"	6"	½"	4'9"	1 LEAK N. SIDE STEPS
CRINELLA 1807	6-10	" "	6"	6"	½"	4'	GOOD
CRINELLA 1782	6-9	" "	6"	6"	1"	3'6"	1 LEAK E. SIDE STEPS

CITY OF ST. HELENA

SANITARY SEWER MANHOLE SURVEY

MARCH 1991

Manhole #/ Location		Date	Line Size In	Line Size Out	Flow in Inches	Depth of Manhole Flow to Street Level	Condition of Manhole
ALEXANDER CT 1635	6-2	3-15-91	4"	6"	Ø	2'	GOOD
MAIN MADRONA	6-1	" "	6"	6"	4"	5'7"	GOOD
MAIN PINE	2-38	" "	6"	6"	4"	5'	GOOD
MAIN ADAMS	2-37	" "	6"	6"	4"	6'8"	GOOD
MAIN 1335	2-36	" "	6"	6"	4"	6'2"	GOOD
MAIN 1289	2-34	" "	6"	6"	4"	5'9"	GOOD
MAIN SPRING	3-14	" "	6"	6"	3"	5'5"	GOOD
MAIN 1080	3-13	" "	6"	8"	4"	4'7"	GOOD
CHURCH 1250	3-11	" "	4"	10"	Ø	4'	GOOD
EDWARDS 1220	3-9	" "	6"	6"	½"	3'5"	GOOD
EDWARDS 1150	3-8A	" "	6"	6"	½"	6'	GOOD
POPE 975	3-8	" "	10"	10"	4"	4'5"	GOOD
POPE 917	3-6	" "	10"	10"	2"	3'5"	GOOD
HUNT 1113	2-21	" "	12"	12"	6"	8'2"	GOOD
HUNT 1017	2-20	" "	12"	12"	5"	8'	GOOD
HUNT 948	2-19	" "	12"	12"	5"	8'6"	GOOD
HUNT 940	2-18	" "	12"	12"	5"	7'2"	GOOD
HUNT 921		" "	12"	12"	5"	8'3"	GOOD
HUNT 765	2-17	" "	12"	12"	6"	7'6"	GOOD
HUNT 751		" "	12"	12"	6"	7'5"	GOOD

CITY OF ST. HELENA

SANITARY SEWER MANHOLE SURVEY

MARCH 1991

Manhole #/ Location	Date	Line Size In	Line Size Out	Flow in Inches	Depth of Manhole Flow to Street Level	Condition of Manhole
HUNT 723 2-7	3-15-91	12"	12"	6"	7'6"	GOOD
HUNT 709 2-6	" "	12"	12"	6"	8'8"	GOOD
HUNT END 2-5	" "	12"	12"	6"	7'4"	GOOD
HUNT END 2-3	" "	12"	12"	6"	8'4"	GOOD
HUNT SAFEWAY 2-14	" "	8"	8"	½"	4'4"	GOOD
HUNT SAFEWAY 2-13	" "	8"	8"	1"	4'3"	GOOD
HUNT 906 SAFEWAY 2-11	" "	8"	8"	1"	5'	GOOD
HUNT 821 2-10	" "	8"	8"	1"	3'5"	GOOD
HUNT MONTE VISTA 2-8	" "	8"	8"	2"	3'7"	GOOD
MONTE VISTA 1347 2-9	" "	6"	8"	0	3'4"	GOOD
GROVE CT 1395	" "	6"	8"	0	4'7"	GOOD
ADAMS 1001	" "	6"	6"	½"	2'3"	GOOD
ADAMS 1000	" "	6"	6"	½"	2'3"	GOOD
ADAMS LA PRIMA	" "	6"	6"	½"	5'2"	GOOD
VINTAGE	" "	8"	8"	½"	6'3"	GOOD
VINTAGE-LINCOLN FARMS	" "	8"	8"	½"	5'5"	GOOD
VINTAGE LA FATA	" "	8"	8"	0	4'5"	GOOD
LA FATA NEW CONST	" "	8"	8"	0	5'5"	GOOD
MAIN ST ZUMWALT	" "	8"	8"	½"	9'6"	GOOD
MAIN VIDOVICH 1-40	" "	6"	6"	½"	2'7"	GOOD

CITY OF ST. HELENA

SANITARY SEWER MANHOLE SURVEY

MARCH 1991

Manhole #/ Location	Date	Line Size In	Line Size Out	Flow in Inches	Depth of Manhole Flow to Street Level	Condition of Manhole
DOWDELL 899	3-15-91	8"	8"	Ø	8'1"	GOOD
DOWDELL 1035	" "	6"	6"	Ø	5'4"	GOOD
DOWDELL 1150	" "	6"	6"	Ø	5'4"	GOOD
FOUNTAIN END OF ST.	" "	6"	6"	Ø	3'6"	GOOD
ELMHURST GRAINGER	" "	6"	6"	Ø	3'	GOOD
ELMHURST QUAIL CT	" "	6"	6"	Ø	4'5"	GOOD
LIBRARY LN. 1400	" "	6"	6"	½"	1'2"	GOOD
LIBRARY LN 7400	" "	6"	6"	½"	3'	GOOD

Sanitary Sewer Video Inspection Work Sheet

QUADRANT Nos.

4 1
3 2

CALIFORNIA PIPE SURVEY

(415) 883-3676

POST OFFICE BOX 3415 · SAN RAFAEL, CALIFORNIA 94912

SANITARY SEWERS -- WORK SHEET

CITY St. Helena
AREA TAPE NO. 4
MAP SHEET District 2
STREET Oak
MANHOLE NO. 2-55 TO NO. 2-40

CLEANED		T.V. INSPECTION							REPAIRED		
CREW LEADER AND DATE	REMARKS	LEAK NO	DISTANCE READING	QUADRANT 1	2	3	4	PHOTO NO	REMARKS	DISTANCE	AIR TEST	SEAL
8/8/85	Televise		1'	X	X				Cracked pipe, offset joint			
Mark P.			4'				X		" "			
			19'	X					" "			
			24'	X					Lateral wye			
			33'						Roots			
			35'	X			X		Cracked pipe			
			39'						Roots			
			41'						"			
			52'	X			X		" cracked pipe			
			54'						"			
			79'	X					Lateral wye			
			82'				X		" tap			
			86'				X		" wye			
			89'	X					" tap			
			103'			X			Cracked pipe			
			114'	X			X		" "			

PIPE CONDITION Fair, roots, cracks, bad taps, slip line or replace

MANHOLE CONDITION Fair

GRADE Fair, up and down

REMARKS TV from MH 2-55, downstream through MH 2-54 to MH2-40

DIRECTION OF MEASUREMENT → ← FROM CENTER OF MANHOLE

MANHOLE NO. 2-55 Pine and Oak → MH 2-54 → MANHOLE NO. 2-40

CUES

PIPE SIZE	6"
TYPE OF PIPE	VCP
TYPE OF JOINT	
SECTION LENGTH	2'

QUADRANT Nos 4 1 3 2

T.V. INSPECTION

LEAK NO	DISTANCE READING	QUADRANT 1	2	3	4	PHOTO NO	REMARKS
	133'	X					Lateral wye
	135'				X		" tap
	149'				X		" wye
	153'			X	X		Cracked pipe
	159'						Roots
	173'						Bad roots
	179'						Roots
	187'	X					Lateral wye, roots
	203'	X			X		" tap
	208'	X	X				Cracked pipe
	258'				X		Lateral wye
	260'	X					" "
	272'	X					" tap, bad roots
	273'	X					Cracked pipe
	276'						Bad roots
	277'	X					Lateral tap
	283'	X			X		" "
	284'						Bad roots
	287'	X					Lateral wye, bad roots
	288'	X	X				Bad roots, cracked pipe
	290'						" "
	295'						MH 54, roots
	299'						Roots
	302'						"
	317'						[illegible]
	326'				X		Lateral wye, roots
	338'	X			X		" tap , [illegible] , cracked [illegible]
	342'				X		Cracked "
	354'	X	X				Cracked pipe, roots

QUADRANT Nos 4 1 3 2

T.V. INSPECTION

LEAK NO	DISTANCE READING	QUADRANT 1	2	3	4	PHOTO NO	REMARKS
	361'	X					Lateral wye
	375'				X		" "
	408'	X			X		Cracked pipe
	410'		X	X			" "
	444'			X	X		Lateral wye
*	445'	X			X		" tap, water running
	446'	X					" wye
	447'	X		X	X		Cracked pipe
	466'						Offset joint
	467'	X					Lateral wye
	480'	X			X		" tap
	482'	X			X		" "
*	491'				X		" " water running
	499'	X			X		" "
	506'			X	X		Cracked pipe
	514'	X			X		" "
	517'				X		Lateral wye
	521'	X					" "
	523'						Dip ½"
	528'						" end
	539'						" ½"
	543'						" end
	564'						" 3/4"
	568'						" end
	578'						" ½"
	581'						" end
	584'	X	X	X			Cracked pipe
	602'						MH 2-40

QUADRANT Nos. 4 1 3 2

CALIFORNIA PIPE SURVEY

(415) 883-3676

POST OFFICE BOX 3415 · SAN RAFAEL, CALIFORNIA 94912

SANITARY SEWERS -- WORK SHEET

CITY St. Helena
AREA TAPE NO. 3 & 4
MAP SHEET District 2
STREET Oak
MANHOLE NO. 2-32 TO NO. 2-55

CLEANED		T.V. INSPECTION								REPAIRED		
CREW LEADER AND DATE	REMARKS	LEAK NO	DISTANCE READING	QUADRANT 1	2	3	4	PHOTO NO	REMARKS	DISTANCE	AIR TEST	SEAL
8/8/85	Thread and Televise		12'	X			X		Cracked pipe			
Mark P.			28'	X	X				Lateral wye			
			58'	X			X		Cracked pipe			
			62'	X			X		" "			
			80'	X			X		Broken joint			
			100'			X	X		Lateral wye, water running			
			101'	X			X		Cracked pipe			
			122'	X			X		" "			
			140'						Dip ¼"			
			146'	X	X				Lateral tap, dip end			
			151'	X			X		Cracked pipe joint			
			166'	X	X				Lateral wye			
			167'	X	X				" tap			
			180'			X	X		" wye			
			200'	X			X		Cracked joint			
			217'						MH 58			

PIPE CONDITION Fair, bad taps, cracked pipe, open joints, slip line or replace.

MANHOLE CONDITION Fair

GRADE Fair

REMARKS TV from MH 2-32, downstream through MH 58 to MH 2-55.

DIRECTION OF MEASUREMENT → ← FROM CENTER OF MANHOLE

MANHOLE NO. 2-32 → MH 58 → MANHOLE NO. 2-55

CUES

PIPE SIZE	6"
TYPE OF PIPE	VCP
TYPE OF JOINT	
SECTION LENGTH	2'

QUADRANT Nos (4 1 / 3 2)

T.V. INSPECTION

LEAK NO	DISTANCE READING	QUADRANT 1	QUADRANT 2	QUADRANT 3	QUADRANT 4	PHOTO NO	REMARKS
	227'						Lateral tap, bad into main 1½" roots
	234'			X	X		" wye
	238'	X			X		" tap
	243'						Offset joint
	244'	X			X		Possible lateral tap or hole
	250'	X	X				Lateral wye
	252'	X			X		" tap or hole
	252'				X		" wye
	258'	X	X	X	X		Cracked pipe joint
	316'	X					Lateral wye, possible 6"
	337'				X		" tap
	339'				X		" wye
	348'						Change to Tape 4
	380'	X					Lateral wye
	383'				X		" "
	416'						MH 55

QUADRANT Nos (4 1 / 3 2)

T.V. INSPECTION

LEAK NO	DISTANCE READING	QUADRANT 1	QUADRANT 2	QUADRANT 3	QUADRANT 4	PHOTO NO	REMARKS

QUADRANT Nos. 4 1 / 3 2

CALIFORNIA PIPE SURVEY

(415) 883-3676

POST OFFICE BOX 3415 • SAN RAFAEL, CALIFORNIA 94912

SANITARY SEWERS -- WORK SHEET

Page 1 of 2 Pages

CITY Ft. Bragg
AREA TAPE NO. 4-65
MAP SHEET District 2-63
STREET Oak
MANHOLE NO. 2-40 TO NO. 3-22

CLEANED		T.V. INSPECTION							REPAIRED		
CREW LEADER AND DATE	REMARKS	LEAK NO	DISTANCE READING	QUADRANT 1	2	3	4	PHOTO NO	REMARKS	DISTANCE	AIR TEST	SEAL
8/8/85 Drake	TV		15'						Roots			
			48'	✓	✓				Cracked Pipe			
			70'			✓	✓		" "			
			99'						Roots			
			103'						"			
			107'						"			
			116'				✓		Lat. Wye "			
			119'						"			
			125'						"			
			144'						"			
			152'						" Drip			
			157'						Drip Cond			
			162'						Roots			
			167'						"			
			168'				✓		Lat. Wye			
			171'				✓		" Tap			

PIPE CONDITION Fair to Bad - Roots - Cracks - Bad Taps

MANHOLE CONDITION Fair

GRADE Fair

REMARKS TV from M.H. 2-40 Downstream thru M.H. 3-23 to M.H. 3-22

DIRECTION OF MEASUREMENT → ← M FROM CENTER OF MANHOLE

MANHOLE NO. 2-40 → M.H. 3-23 → MANHOLE NO. 3-22

Clean

PIPE SIZE	6"
TYPE OF PIPE	VCP
TYPE OF JOINT	
SECTION LENGTH	2'

QUADRANT Nos 4 1 3 2	T.V. INSPECTION					
LEAK NO	DISTANCE READING	QUADRANT 1	2	3	4	PHOTO NO	REMARKS
	198'	✓					Lat. Wye
	207'				✓		" "
	218'						Roots
	232'		✓	✓			Cracked Pipe
	239'	✓			✓		" Tap " "
	241'		✓	✓			" "
	247'	✓	✓				" "
	255'	✓	✓	✓			" "
	261'						Roots
	265'				✓		" " " " "
	286'						"
	294'						Dip ½
	301'	✓			✓		" Tap Roots " End
	319'				✓		" Wye
	334'			✓	✓		Cracked Pipe
	368'	✓					" "
	369'						Offset ACP
	350'				✓		" " "
	373'						Joint VCP
	407'				✓		" "
	455'				✓		" " Dip ¾"
	468'						Sh. Ht 3-23
	479'	✓					Cracked Pipe
C	481'	✓					Lat. Wye - 6" Water Running
	515'	✓	✓				Change to Tape 5 Cracked Pipe
	544'			✓	✓		Dip " "
	545'				✓		Lat Wye
	548'						Root
	549'	✓					" "

QUADRANT Nos 4 1 3 2	T.V. INSPECTION					
LEAK NO	DISTANCE READING	QUADRANT 1	2	3	4	PHOTO NO	REMARKS
	549.5	✓			✓		Lat Tap Dip End
	570'	✓			✓		Cracked Pipe
	571'				✓		" Tap
	603'	✓					" " " "
	615'	✓	✓				" "
	626'				✓		" Wye
	628'	✓					" " Dip ½
	637'						" ¾
	648'	✓			✓		" ¼ " "
	665'						" End
	675'				✓		" "
	696'	✓					" Tap
	706'				✓		" Wye Dip ½"
	708'	✓					" "
	715'	✓			✓		" Tap " "
	717'	✓			✓		" " Roots " "
	721'	✓			✓		" " "
	724'	✓			✓		" "
	736'	✓	✓				— " " "
	736.8	✓			✓		" "
	754'				✓		" Tap
	762'	✓			✓		" " or Hole
	763'	✓		✓	✓		" Tap + Wye or "
	764'	✓			✓		" " Root or Hole
	786'	✓					" Wye
	799'	✓	✓				Cracked Pipe
	807'	✓			✓		" Tap or Hole
	810'	✓			✓		" " " "
	828'	✓			✓		" "

QUADRANT Nos. 4 1 3 2

CALIFORNIA PIPE SURVEY

(415) 883-3676

POST OFFICE BOX 3415 • SAN RAFAEL, CALIFORNIA 94912

SANITARY SEWERS -- WORK SHEET

Page 2 of 2 Pages

CITY Sth. Helena
AREA TAPE NO. 465
MAP SHEET 2 & 3
STREET Oak
MANHOLE NO. 2-40 TO NO. 3-2

CLEANED		T.V. INSPECTION							REPAIRED		
CREW LEADER AND DATE	REMARKS	LEAK NO	DISTANCE READING	QUADRANT 1	2	3	4	PHOTO NO	REMARKS	DISTANCE	AIR TEST	SEAL
			838'						Sta to [redacted] Concrete Pipe	?	Dip ½"	
			866'						MH. 3-22			

PIPE CONDITION
MANHOLE CONDITION
GRADE
REMARKS

DIRECTION OF MEASUREMENT → ← FROM CENTER OF MANHOLE

MANHOLE NO. MANHOLE NO.

PIPE SIZE
TYPE OF PIPE
TYPE OF JOINT

Sanitary Sewer Maintenance Report

STREET DEPARTMENT

SANITARY SEWER MAINTENANCE REPORT

DATE: _____

START WORK _____ END WORK _____ EMERGENCY CALL: Yes___ No___

RODDED _____ L.F. on _____ From _____ To _____ DATE _____
RODDED _____ L.F. on _____ From _____ To _____ DATE _____
RODDED _____ L.F. on _____ From _____ To _____ DATE _____
RODDED _____ L.F. on _____ From _____ To _____ DATE _____
RODDED _____ L.F. on _____ From _____ To _____ DATE _____
RODDED _____ L.F. on _____ From _____ To _____ DATE _____
RODDED _____ L.F. on _____ From _____ To _____ DATE _____
RODDED _____ L.F. on _____ From _____ To _____ DATE _____
RODDED _____ L.F. on _____ From _____ To _____ DATE _____
RODDED _____ L.F. on _____ From _____ To _____ DATE _____
RODDED _____ L.F. on _____ From _____ To _____ DATE _____
RODDED _____ L.F. on _____ From _____ To _____ DATE _____
RODDED _____ L.F. on _____ From _____ To _____ DATE _____
RODDED _____ L.F. on _____ From _____ To _____ DATE _____

MANHOLES # _____ on _____ From _____ To _____ DATE _____

REPAIR _____ DATE _____

REPAIR _____ DATE _____

STOPPAGE LOCATION _____

Cause of stoppage, unusual conditions or added information

_____

_____

Equipment	Hours	Labor	Hours

_____

STREET FOREMAN

S T R E E T D E P A R T M E N T

SANITARY SEWER MAINTENANCE REPORT

DATE: _____ 19___

START WORK _____ END WORK _____ EMERGENCY CALL ____ Yes ____ No

RODDED 365' L.F. on Allison From Pope To Brown DATE 9/27/06

RODDED 292' L.F. on Allison From Brown To McCorkle DATE " "

RODDED _____ L.F. on _____ From _____ To _____ DATE _____

RODDED _____ L.F. on _____ From _____ To _____ DATE _____

RODDED _____ L.F. on _____ From _____ To _____ DATE _____

RODDED _____ L.F. on _____ From _____ To _____ DATE _____

RODDED _____ L.F. on _____ From _____ To _____ DATE _____

RODDED _____ L.F. on _____ From _____ To _____ DATE _____

RODDED _____ L.F. on _____ From _____ To _____ DATE _____

RODDED _____ L.F. on _____ From _____ To _____ DATE _____

RODDED _____ L.F. on _____ From _____ To _____ DATE _____

RODDED _____ L.F. on _____ From _____ To _____ DATE _____

RODDED _____ L.F. on _____ From _____ To _____ DATE _____

MANHOLES # _____ on _____ From _____ To _____ DATE _____

REPAIR _____ DATE _____

REPAIR _____ DATE _____

STOPPAGE-LOCATION _____

Cause of stoppage, unusual conditions or added info.

_____

_____

==========

Equipment	Hours	Labor	Hours

_____
Street Foreman

STREET DEPARTMENT

DATE: JAN 2002 ~~19~~

SANITARY SEWER MAINTENANCE REPORT

START WORK _____ END WORK _____ EMERGENCY CALL ____ Yes ____ No

RODDED 292 L.F. on Allison From McCorkle To Brown St DATE 1-29-02

RODDED 365' L.F. on " From Brown To Pope DATE 6-6-02

RODDED 292' L.F. on " From McCorkle To Brown St DATE 6-10-02

RODDED 234 L.F. on " From McCorkle To Charter Oak DATE 6-10-02

RODDED 365 L.F. on Allison From Brown To Pope DATE 1/21-03

RODDED 365' L.F. on Allison From Brown To Pope DATE 3/18/03

RODDED 292' L.F. on Allison From McCorkle To Brown DATE 3/18/03

RODDED 234' L.F. on " From ~~Brown~~ McCorkle To Charter oak DATE 3/18/03

RODDED 365' L.F. on " From Brown To Pope DATE 9/15/03

RODDED 292' L.F. on " From McCorkle To Brown DATE 9/15/03

RODDED 365' L.F. on " From Brown To Pope DATE 1-20-04

RODDED 292' L.F. on " From McCorkle To Brown DATE 1-20-04

RODDED 234' L.F. on " From McCorkle To Charter Oak DATE 1-21-04

RODDED 365 L.F. on Allison From Brown To Pope DATE 11-15-04

MANHOLES # _____ on _____ From _____ To _____ DATE _____

REPAIR _____ DATE _____

REPAIR _____ DATE _____

STOPPAGE-LOCATION _____

Cause of stoppage, unusual conditions or added info.

_____

_____

==========

Equipment	Hours	Labor	Hours

_____
Street Foreman

S T R E E T D E P A R T M E N T

DATE: 11-8-04 19___

SANITARY SEWER MAINTENANCE REPORT

START WORK _____ END WORK _____ EMERGENCY CALL ___ Yes ___ No

RODDED 1119 Alley L.F. on Adams From 1444 Adams To 1533 Pine DATE 11-8-04

RODDED 365 L.F. on Allison From Brown To Pope DATE 6-14-04

RODDED 292 L.F. on Allison From McCorckle To Brown DATE 6-14-04

RODDED 234 L.F. on Allison From McCorckle To Chanteroak DATE 6-14-04

RODDED 449 L.F. on Adams From 1449 adams To Pine St DATE 9/17/04

376 Hunter 449 RODDED 449 L.F. on Alley From Adams To Pine DATE 12/06/04

RODDED 373 L.F. on Adams From 1444 To Tanten DATE 12/7/04

RODDED _____ L.F. on _____ From _____ To _____ DATE _____

RODDED _____ L.F. on _____ From _____ To _____ DATE _____

RODDED _____ L.F. on _____ From _____ To _____ DATE _____

RODDED _____ L.F. on _____ From _____ To _____ DATE _____

RODDED _____ L.F. on _____ From _____ To _____ DATE _____

RODDED _____ L.F. on _____ From _____ To _____ DATE _____

RODDED _____ L.F. on _____ From _____ To _____ DATE _____

MANHOLES # _____ on _____ From _____ To _____ DATE _____

REPAIR _____ DATE _____

REPAIR _____ DATE _____

STOPPAGE-LOCATION _____

Cause of stoppage, unusual conditions or added info.

_____

_____

==========

Equipment	Hours	Labor	Hours

_____

Street Foreman

S T R E E T D E P A R T M E N T

SANITARY SEWER MAINTENANCE REPORT

DATE: 1-21-03 19___

START WORK _____ END WORK _____ EMERGENCY CALL ____ Yes ____ No

RODDED 193 L.F. on Brown From 933 Brown To Allison DATE [illegible]

RODDED 333' L.F. on Brown From 933 Brown To End DATE [illegible]

RODDED 193' L.F. on Brown From Allison To 933 DATE 3-18-03

RODDED 190' L.F. on Birch From South crane & Birch To Birch & Hudson DATE 10-28-03

RODDED 333' L.F. on Brown From 933 To END DATE 1-19-04

RODDED 65' L.F. on Brown From School To Fence DATE 1-19-04

RODDED 193' L.F. on Brown From Allison To 933 DATE 1-19-04

RODDED 333' L.F. on Brown From 933 To END DATE 1-20-04

RODDED 402 L.F. on Brown From 933 To End DATE 6-14-04

RODDED 193 L.F. on Brown From 933 To Allison DATE 6-14-04

RODDED 193 L.F. on Brown From Allison To 933 DATE 9-28-06

RODDED _____ L.F. on _____ From _____ To _____ DATE _____

RODDED _____ L.F. on _____ From _____ To _____ DATE _____

RODDED _____ L.F. on _____ From _____ To _____ DATE _____

MANHOLES # _____ on _____ From _____ To _____ DATE _____

REPAIR _____ DATE _____

REPAIR _____ DATE _____

STOPPAGE-LOCATION _____

Cause of stoppage, unusual conditions or added info.

_____

_____

==========

Equipment	Hours	Labor	Hours

_____
Street Foreman

STREET D 'ARTMENT
SANITARY SEWER MAINTENANCE REPORT

Rodded LF	Street	from x Street	to x Street	Date	Routine	Emergency	Info
96'	Crinella	1759	End Pumplke	1/19/07	X		Hydro
324'	Charter oak	1027	Tre Vigne	3/30/07	X		Hydro Vac Demo

S T R E E T D E P A R T M E N T

DATE: _____ 2003 ~~19~~ ____

SANITARY SEWER MAINTENANCE REPORT

START WORK _____ END WORK _____ EMERGENCY CALL ____ Yes ____ No

RODDED 324 L.F. on Charter Oak From Tre Vigne To Charter oak House DATE 3/18/03

RODDED 316 L.F. on Charter oak From 942 Charter oak To Allison DATE 3/19/03

RODDED 327 L.F. on Charter oak From 942 Charter oak To Charter oak House DATE 3/19/03

RODDED 96' L.F. on Crinella From 259 Crinella To Pump Station DATE 10-28-03

RODDED 324' L.F. on Charter oak From Tre Vigne To Charter House DATE 1-21-04

RODDED 327' L.F. on Charter oak From 942 Charter To Charter oak house DATE 1-27-04

RODDED 316' L.F. on Charter oak From 942 Charter oak To Allison DATE 1-27-04

M RODDED 327 L.F. on Charter oak From Charter oak Nagle To 942 Charter oak DATE 11-15-04

M RODDED 324 L.F. on Charter oak From Charter oak Nagle To Tre Vigne DATE 11-15-04

RODDED 250 L.F. on [illegible] From 1726 [illegible] To [illegible] DATE [illegible]

RODDED 175 L.F. on [illegible] From [illegible] To [illegible] DATE [illegible]

RODDED 324' L.F. on [illegible] From [illegible] To Tre Vigne DATE [illegible]

RODDED _____ L.F. on _____ From _____ To _____ DATE _____

RODDED _____ L.F. on _____ From _____ To _____ DATE _____

MANHOLES # _____ on _____ From _____ To _____ DATE _____

REPAIR _____ DATE _____

REPAIR _____ DATE _____

STOPPAGE-LOCATION _____

Cause of stoppage, unusual conditions or added info.

_____

_____

==========

Equipment	Hours	Labor	Hours

_____
Street Foreman

STREET DEPARTMENT

SANITARY SEWER MAINTENANCE REPORT

DATE: _____ 19___

START WORK _____ END WORK _____ EMERGENCY CALL ____ Yes ____ No

RODDED 253' L.F. on Hunt From 1017 To Hunt/Railroad DATE 9/12/03

RODDED 253' L.F. on Hunt From 1017 To Hunt/Railroad DATE 11/18/03

RODDED 468' L.F. on Hunt From 1017 To Main St DATE 2-23-04

RODDED 253' L.F. on Hunt From 1017 To Hunt/Railroad DATE 4-5-04

RODDED 168' L.F. on Hunt From 1017 Hunt To Edwards DATE 4-5-04

RODDED 238' L.F. on Hunt From Edwards To 940 Hunt DATE 4-5-04

RODDED 158 L.F. on Hunt From 940 Hunt To June Ln DATE 4-5-04

RODDED 464' L.F. on Hunt From June Ln To 829 Hunt DATE 4-6-04

RODDED 181' L.F. on Hunt From 829 Hunt To Grove Ct DATE 4-6-04

RODDED 263' L.F. on Hunt From Grove Ct To Monte Vista DATE 4-6-04

RODDED 360' L.F. on Hunt From 8" Monte Vista To 830 Hunt DATE 4-6-04 8" Line

RODDED 260' L.F. on Hunt From Edwards To Church DATE 4-12-04 6" Line

RODDED 603' L.F. on Hunt From 906 Hunt To Edwards DATE 4-12-04 8" Line

RODDED 485' L.F. on Hunt From 830 Hunt To 906 Hunt DATE 4-12-04 8" Line

MANHOLES # _____ on _____ From _____ To _____ DATE _____

REPAIR _____ DATE _____

REPAIR _____ DATE _____

STOPPAGE-LOCATION _____

Cause of stoppage, unusual conditions or added info.

_____

_____

==========

Equipment	Hours	Labor	Hours

_____
Street Foreman

STREET DEPARTMENT
SANITARY SEWER MAINTENANCE REPORT

Rodded LF	Street	from x Street	to x Street	Date	Routine	Emergency	Info
212'	Hunt	Railroad	Main	12/19/06	X		Hydro
253'	Hunt	1017 Hunt	Railroad	12/19/06	X		Hydro

S T R E E T D E P A R T M E N T

SANITARY SEWER MAINTENANCE REPORT

DATE: _____ 19___

START WORK _____ END WORK _____ EMERGENCY CALL ____ Yes ____ No

RODDED 253' L.F. on Hunt From 1017 Hunt To Hunt/R.R. DATE 5/28/04

RODDED 468 L.F. on Hunt From 1017 To Main DATE 6/30/04

RODDED 212 L.F. on Hunt From R.R. To Main DATE 12/17/04

RODDED 253 L.F. on Hunt From RR To 1017 DATE 12/17/04

RODDED 212' L.F. on Hunt From R R To Main DATE 3/22/04

RODDED 212' L.F. on Hunt From R.R. To Main DATE 11/29/04

RODDED 212' L.F. on Hunt From RR Hunt To Main DATE 6/15/05

RODDED 253' L.F. on Hunt From 1015 Hunt To RR & Hunt DATE 6/15/06

RODDED 468' L.F. on Hunt From 1017 Hunt To Main DATE 9/28/06

RODDED _____ L.F. on _____ From _____ To _____ DATE _____

RODDED _____ L.F. on _____ From _____ To _____ DATE _____

RODDED _____ L.F. on _____ From _____ To _____ DATE _____

RODDED _____ L.F. on _____ From _____ To _____ DATE _____

RODDED _____ L.F. on _____ From _____ To _____ DATE _____

MANHOLES # _____ on _____ From _____ To _____ DATE _____

REPAIR _____ DATE _____

REPAIR _____ DATE _____

STOPPAGE-LOCATION _____

Cause of stoppage, unusual conditions or added info.

_____

_____

==========

Equipment	Hours	Labor	Hours

_____
Street Foreman

STREET DEPARTMENT

SANITARY SEWER MAINTENANCE REPORT

DATE: 4-20-04 ~~19~~

START WORK _____ END WORK _____ EMERGENCY CALL ____ Yes X No

RODDED 389' L.F. on Kearney From Kearney & Tainter To Kearney & spring DATE 4-20-04

RODDED 135' L.F. on Kearney From 1621 tainter To end mar tube DATE 10-11-06

RODDED _____ L.F. on _____ From _____ To _____ DATE _____

RODDED _____ L.F. on _____ From _____ To _____ DATE _____

RODDED _____ L.F. on _____ From _____ To _____ DATE _____

RODDED _____ L.F. on _____ From _____ To _____ DATE _____

RODDED _____ L.F. on _____ From _____ To _____ DATE _____

RODDED _____ L.F. on _____ From _____ To _____ DATE _____

RODDED _____ L.F. on _____ From _____ To _____ DATE _____

RODDED _____ L.F. on _____ From _____ To _____ DATE _____

RODDED _____ L.F. on _____ From _____ To _____ DATE _____

RODDED _____ L.F. on _____ From _____ To _____ DATE _____

RODDED _____ L.F. on _____ From _____ To _____ DATE _____

RODDED _____ L.F. on _____ From _____ To _____ DATE _____

MANHOLES # _____ on _____ From _____ To _____ DATE _____

REPAIR _____ DATE _____

REPAIR _____ DATE _____

STOPPAGE-LOCATION _____

Cause of stoppage, unusual conditions or added info.

_____

_____

==========

Equipment	Hours	Labor	Hours

_____

Street Foreman

STREET DEPARTMENT

DATE: 1-17- ~~19~~ 2000

SANITARY SEWER MAINTENANCE REPORT

START WORK _____ END WORK _____ EMERGENCY CALL X Yes ___ No

RODDED	239'	L.F. on	Library Ln	From	Adams	To	Library	DATE	1-17-00
RODDED	177'	L.F. on	"	From	"	To	"	DATE	1-24-00
RODDED	177'	L.F. on	"	From	"	To	"	DATE	12-1-00
RODDED	177'	L.F. on	"	From	"	To	"	DATE	12-29-00
RODDED	177'	L.F. on	"	From	"	To	"	DATE	1-3-01
RODDED	177'	L.F. on	"	From	"	To	"	DATE	10-12-01
RODDED	177'	L.F. on	" "	From	" "	To	" "	DATE	2-28-03
RODDED	177'	L.F. on	"	From	"	To	"	DATE	3-25-03
RODDED		L.F. on		From		To		DATE	
RODDED		L.F. on		From		To		DATE	
RODDED		L.F. on		From		To		DATE	
RODDED		L.F. on		From		To		DATE	
RODDED		L.F. on		From		To		DATE	
RODDED		L.F. on		From		To		DATE	
MANHOLES #		on		From		To		DATE	
REPAIR								DATE	
REPAIR								DATE	

STOPPAGE-LOCATION Roots 45'-50" use 6" cutter

Cause of stoppage, unusual conditions or added info.

Equipment	Hours	Labor	Hours

Street Foreman

STREET D ARTMENT
SANITARY SEWER MAINTENANCE REPORT

Rodded LF	Street	from x Street	to x Street	Date	Routine	Emergency	Info
135'	Railroad	Hunt	behind Kellers	12/19/06	X		Hydro

STREET D 'ARTMENT
SANITARY SEWER MAINTENANCE REPORT

Rodded LF	Street	from x Street	to x Street	Date	Routine	Emergency	Info
97'	Spring	Money Way	Main St	1/5/07		X	Solids
97'	Spring	Money Way	Main st	1/31/07	X		Hydro
255'	Spring	Money Way	Oak	1/31/07	X		Hydro

STREET DEPARTMENT

SANITARY SEWER MAINTENANCE REPORT

DATE: _____ 19___

START WORK _____ END WORK _____ EMERGENCY CALL ____ Yes ____ No

RODDED 156' L.F. on Spring Mt. Rd. From 1781 S. M.R. To 1709 S. M. R. DATE 2/9/95

RODDED 156' L.F. on " From " To " DATE 1-30-01

RODDED 305' L.F. on Spring From Oak To Main DATE 1-14-03

RODDED 400' L.F. on Spring From Kearny To Oak DATE 12-09-03

RODDED 357 L.F. on Spring From Oak To Main DATE 1-12-04

RODDED 156' L.F. on Spring mt. rd. From 1781 SMR To 1709 SMR Do not rod up hill DATE 1-23-04

RODDED 357' L.F. on Spring From Oak To Main DATE 2-20-04

RODDED 156' L.F. on Spring mt. Rd. From 1781 SMR To 1709 SMR DATE 2-9-04

RODDED 400' L.F. on Spring From Kearny To Oak St DATE 4-20-04

RODDED 357' L.F. on Spring From Oak To Main DATE 4-21-04

RODDED 100' L.F. on Spring From Money Way To Main DATE 12/13/04

RODDED 255' L.F. on Spring From Money Way To Oak DATE 12/13/04

RODDED 380' L.F. on Spring From Kearney To Oak DATE 12/13/04

RODDED 156' L.F. on Spr. Mt. From 1781 Spr Mt. To 1709 Spr Mt DATE 12/15/06

MANHOLES # _____ on _____ From _____ To _____ DATE _____

REPAIR _____ DATE _____

REPAIR _____ DATE _____

STOPPAGE-LOCATION _____

Cause of stoppage, unusual conditions or added info.

_____

_____

Equipment	Hours	Labor	Hours

_____
Street Foreman

STREET DEPARTMENT

775
835
8015

DATE: 6/ 2003 ~~19~~

SANITARY SEWER MAINTENANCE REPORT

START WORK _____ END WORK _____ EMERGENCY CALL ____ Yes ____ No

RODDED 452' L.F. on SIL.OR From Pope To End 8" DATE 6/25/03

RODDED 260' L.F. on Safeway From Parking Lot To Hunt DATE 4/5/04

RODDED 270' L.F. on Safeway From Parking Lot To Adams DATE 4/5/04

RODDED 270' L.F. on Safeway From Parking Lot To Adams DATE 4/21/04

RODDED 452 L.F. on Pope From Sil orchards To End DATE 5/19/04

RODDED 452' L.F. on Pope From Sil orchards To End 8" DATE 5/2/05

RODDED 452' L.F. on Pope From Sil. orchards To End DATE 3/16/06

RODDED _____ L.F. on _____ From _____ To _____ DATE _____

RODDED _____ L.F. on _____ From _____ To _____ DATE _____

RODDED _____ L.F. on _____ From _____ To _____ DATE _____

RODDED _____ L.F. on _____ From _____ To _____ DATE _____

RODDED _____ L.F. on _____ From _____ To _____ DATE _____

RODDED _____ L.F. on _____ From _____ To _____ DATE _____

RODDED _____ L.F. on _____ From _____ To _____ DATE _____

MANHOLES # _____ on _____ From _____ To _____ DATE _____

REPAIR _____ DATE _____

REPAIR _____ DATE _____

STOPPAGE-LOCATION _____

Cause of stoppage, unusual conditions or added info.

_____

_____

==========

Equipment	Hours	Labor	Hours

_____
Street Foreman

STREET DEPARTMENT

DATE: March 2003 19

SANITARY SEWER MAINTENANCE REPORT

START WORK _____ END WORK _____ EMERGENCY CALL ____ Yes ____ No

RODDED 449' L.F. on Vineyard From 1797 To Hillview DATE 3/24/03

RODDED 277 L.F. on Vineyard From Doris Ct To 1797 DATE "

RODDED 449' L.F. on Vineyard From 1797 To Hillview DATE 5/9/03

RODDED 449 L.F. on Vineyard From Hillview To 1797 DATE 8/1/03 Roots

RODDED 449 L.F. on Vineyard From 1797 To Hillview DATE 10/27

RODDED 277' L.F. on Vineyard From Doris Ct. To 1797 DATE 10/27/03

RODDED 401' L.F. on Voorhees From Mitchel & Voorheens To 1554 Voorhees DATE 10-27-03

RODDED 449' L.F. on Vineyard From Hillview To 1797 Vineyard DATE 4-20-04

RODDED 449' L.F. on Vineyard From 1797 Vineyard To Hillview DATE 5-13-04

RODDED 449' L.F. on Vineyard From 1797 To Hillview DATE 5-19-04

RODDED 277 L.F. on Vineyard From 1797 To Doris DATE 12 6 04

RODDED 449 L.F. on Vineyard From 1797 To Hillview DATE 12 6 04

RODDED 449 L.F. on Vineyard From Hillview To 1797 Vineyard DATE 5-20-05

RODDED 449' L.F. on Vineyard From Hillview To 1797 Vineyard DATE 3-20-06

MANHOLES # _____ on _____ From _____ To _____ DATE _____

REPAIR _____ DATE _____

REPAIR _____ DATE _____

STOPPAGE-LOCATION _____

Cause of stoppage, unusual conditions or added info.

3" cutter only

Equipment	Hours	Labor	Hours

Street Foreman

Sanitary Sewer Work Sheet

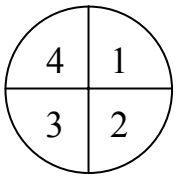

Quadrant Nos.

City of St. Helena

Sanitary Sewer Work Sheet

Street		
Manhole Id. # From: To:		
Date		
Pipe size	in:	out:
Type of pipe	in:	out:
Manhole Type Condition		

Distance reading	Quadrant 1	2	3	4	REMARKS

4	1
3	2

Quadrant Nos.

143 under water
173

City of St. Helena

Sanitary Sewer Work Sheet

Street	MAIN
Manhole Id. # from	Pine
To	Adams
Date	1-4-07
pipe size	6 in 6 out
type of pipe	in out
Manhole Type	
Condition	

Distance reading	quadrant 1	2	3	4	REMARKS	REMARKS & REPAIRS NEEDED
13.3				X	LATERAL	
17.9	X				LATERAL	56' under water
19.8	X				LATERAL	
42.2				X	LATERAL	
48.1				X	LATERAL	
57.3					Roots Top of Pipe	
05.5					Roots 3RD QUAD	
24.0			X		LATERAL	
26.1	X				LATERAL	
31.0					ROOTS	Cleaned
35.0						
15.4	X				LATERAL	
17.7				X	LATERAL	
05.5					Roots	Cleaned
11.5					Roots	
19.8				X	Lateral	
21.9	X				Lateral	
26.4					Chip on Top 1st Quad.	
47.7			X		Lateral	
50.0		X			Lateral	
75.8			X		Lateral	
78.1		X			Lateral	
02.1					Roots 3RD/4th Quad	
04.1			X		Lateral	
10.1					Water top of Pipe In.	
21.6					Lateral top of Pipe	
24.0					under water	

Direction of Measurement
From Center of Manhole

manhole Id. #

manhole Id. #

No.# of Laterals;

No.# of Lots

4	1
3	2

Quadrant Nos.

City of St. Helena

Sanitary Sewer Work Sheet

Street Oak St.
Manhole Id. #
from 1445
To Adams
Date 6/23/04
pipe size in 6" out 6"
type of pipe in out
Manhole
Type Clay
Condition

istance reading	quadrant 1	2	3	4	REMARKS
27.7				X	LATERAL
43.2				X	LATERAL
61.8		X			LATERAL Active
76.0				X	LATERAL
42.0				X	LATERAL Active
43.8		X			LATERAL Active
64.7		X			LATERAL Active
78.5					HOLE IN TOP of PIPE
88.1				X	LATERAL Active
13.7				X	LATERAL
217.8		X			LATERAL
295					Manhole
					Adams to Tainter ON Oak St.
05.4				X	LATERAL
55.6				X	LATERAL
59.2				X	LATERAL
86.0		X			LATERAL
94.2				X	LATERAL
26.2		X			LATERAL Active
52.1				X	LATERAL
286.3					Roots / camera can't get past
					Tainter to Adams on oak St
10.0		X			Lateral
56.0		X			Lateral Wye
72.1		X			Lateral Active
3.8				X	Lateral
19.0					Offset Joint Camera won't go

REMARKS & REPAIRS NEEDED

Direction of Measurement
From Center of Manhole

1445 manhole Id. # — OAK ST. — manhole Id. #

No.# of Laterals;

No.# of Lots

156

4	1
3	2

Quadrant Nos.

City of St. Helena

Sanitary Sewer Work Sheet

Street Oak St.
Manhole Id. #
from Tainter st.
To Spring St.
Date
pipe size in 6" out 6"
type of pipe in out
Manhole
Type
Condition

Distance reading	quadrant 1	2	3	4	REMARKS
					Tainter to Spring on Oak
11.3		X			Lateral for Tainter st
73.0			X		Lateral
77.1		X			Lateral
18.5				X	Lateral
30.4	X				Lateral ? Toilet Paper
52.7				X	Lateral
54.8	X				Lateral
200.7				X	Lateral
221.5	X				Lateral Active
230.9				X	Lateral Roots Heavy
233.4	X				Lateral
239.3					Pipe Broken ?
242.4					Pipe Broken
245.6					Pipe Broken
248.4					Pipe Broken
261.0					Pipe Broken
286.6					Roots
309.0		X			Lateral
322.1					Broken Pipe
330.5					Broken Pipe
332.6					Broken Pipe
350.8	X				Lateral
366.6					Grease Stopped Camera

REMARKS & REPAIRS NEEDED

Direction of Measurement
From Center of Manhole

manhole Id. # — Oak St — manhole Id. #

No.# of Laterals;

No.# of Lots

4	1
3	2

Quadrant Nos.

465 OAK
635
70

City of St. Helena

Sanitary Sewer Work Sheet

634
494
141

Street MADRONA AVE
Manhole Id. #
from KEARNY
To OAK
Date 12-15-00
pipe size 6 in 6 out
type of pipe in clay out
Manhole
Type
Condition

stance eading	quadrant 1	2	3	4	REMARKS	Reel
21				X	Lateral	22.1
46.4				X	Lateral	46.5
65.2	X				Roots (small)	65.3
110	X				Lateral	110.0
122.5				X	Lateral	122.5
152.1	X				Lateral	152.3
188.2	X				Lateral	188.4
196.5				X	Lateral	196.5
270.1				X	Lateral	270.1
342.4				X	Lateral	342.4
399					Manhole OAK & MADRONA	
416.4				X	Lateral	416.4
440.8					water	
442.5					out of water (Roots??)	442.5
462.3	X	X	X	X	Roots	
472.2					Stained water (Grease)	472.9
480.9					out a lot of water	480.5
488.4					Top of Pipe Cleaned	488.0
490.5					Green water water	490.2

REMARKS & REPAIRS NEEDED

Man Hole 193.5 Reel 193.1

MAN HOLE-

Direction of Measurement
From Center of Manhole

manhole Id. #

manhole Id. #

No.# of Laterals;

No.# of Lots

4	1
3	2

Quadrant Nos.

City of St. Helena

Sanitary Sewer Work Sheet

Street MADRONA

Manhole Id. # SPRING ST STAA

from

To

Date 12-15-04

pipe size 6 in 6 out

type of pipe in out

Manhole

Type

Condition

stance reading	quadrant 1	2	3	4	REMARKS
6'					underwater
10.3					out of water.
7.5				x	Lateral ??? 17.5'

REMARKS & REPAIRS NEEDED

Direction of Measurement
From Center of Manhole

manhole Id. #

manhole Id. #

No.# of Laterals;

No.# of Lots

4	1
3	2

Quadrant Nos.

City of St. Helena

Sanitary Sewer Work Sheet

Street	MADRONA
Manhole Id. #	STOCKTON TO SPRINGS MT RD
from	
To	
Date	12-15-09
pipe size	in out
Type of pipe	in out
Manhole	
Type	
Condition	

Distance Reading	quadrant 1	2	3	4	REMARKS
1.3				X	Lateral.
2.6				X	Lateral 12.2
16.6				X	Lateral 20.8
2.7					under water
21.0					couldn't get PASS d it Knew why.

REMARKS & REPAIRS NEEDED

Direction of Measurement
From Center of Manhole

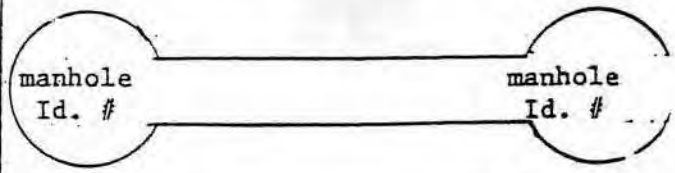

No.# of Laterals;

No.# of Lots

4	1
3	2

Quadrant Nos.

Chart 7140

City of St. Helena

Sanitary Sewer Work Sheet

" Street

Manhole Id. #
from West America Bank
To LA Prima Gateway P.L.
Date 4/20/04
pipe size in out
type of pipe in out
Manhole West America Bank
Type Adams
Condition

istance reading	quadrant 1	2	3	4	REMARKS
28.2		✓			West America Let
57.5			✓		LATERAL Parking Lot ?
216.0					Possible Manhole ?

REMARKS & REPAIRS NEEDED

Direction of Measurement
From Center of Manhole

manhole Id. #

manhole Id. #

No.# of Laterals;

No.# of Lots

4	1
3	2

Quadrant Nos.

City of St. Helena

Sanitary Sewer Work Sheet

Street	TAINTER McBLOR KERLY & SNR
Manhole Id. #	
from	
To	
Date	
pipe size in	out
type of pipe in	out
Manhole	
Type	
Condition	

Distance reading	quadrant 1	2	3	4	REMARKS
	/				manhole McBlor & Tainter
15	X				LAteral x
23				X	LAteral x
63					Broken Pipe top
97				X	Broken Pipe with Roots
109				X	LAteral
119	X				LAteral x
21	X	TOP		X	CLEAR out top Pipe x
147				X	LAteral x

REMARKS & REPAIRS NEEDED

Direction of Measurement
From Center of Manhole

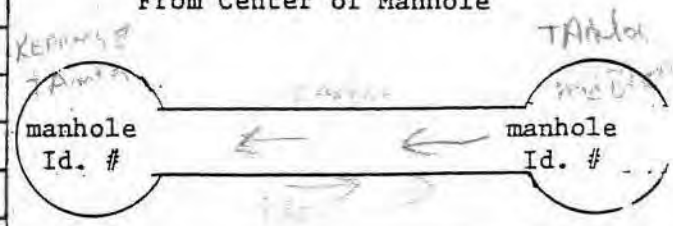

No.# of Laterals;

No.# of Lots

4	1
3	2

Quadrant Nos.

City of St. Helena

Sanitary Sewer Work Sheet

Mitchell

" Street		
Manhole Id. #		
from		
To		
Date		
pipe size	in	out
type of pipe	in	out
Manhole		
Type		
Condition		

istance reading	quadrant 1	2	3	4	REMARKS
6.6"			X		
29.4		X			
83.0			X		
143			X		The House That was Flooded
190			X		
					313

REMARKS & REPAIRS NEEDED

Direction of Measurement
From Center of Manhole

manhole Id. #

manhole Id. #

No.# of Laterals;

No.# of Lots

4	1
3	2

Quadrant Nos.

City of St. Helena

Sanitary Sewer Work Sheet

" Street Chestnut Oak

Manhole Id. #

from

To

Date

pipe size in out

type of pipe in out

Manhole

Type

Condition

istance reading	quadrant 1	2	3	4	REMARKS
51.2				X	Lad
172	X				

REMARKS & REPAIRS NEEDED

Direction of Measurement
From Center of Manhole

manhole Id. #

manhole Id. #

No.# of Laterals;

No.# of Lots

4	1
3	2

Quadrant Nos.

City of St. Helena

Sanitary Sewer Work Sheet

From MH to Clean out

" Street

Manhole Id. #
from
To

Date

pipe size 6" in out

type of pipe in out

Manhole Con

Type

Condition

Hutson 1145
To Clean out

istance reading	quadrant 1	2	3	4	REMARKS
3'	X			X	Lad
63.1	X			X	Lad
165					
187.6	X				
120.5				X	
180	X			X	
239	X			X	
276					Roots
298	X			X	Lad & Roots
323	X			X	Lad & Roots

REMARKS & REPAIRS NEEDED

Direction of Measurement
From Center of Manhole

manhole Id. #

manhole Id. #

No.# of Laterals;

No.# of Lots

4	1
3	2

Quadrant Nos.

City of St. Helena

Sanitary Sewer Work Sheet

Street PINOT WAY

Manhole Id. # from 2543 PINOT WAY

To

Date 9/29/98

pipe size in out

type of pipe in out

Manhole

Type

Condition

istance reading	quadrant 1	2	3	4	REMARKS
					CNTR MANHOLE 2543 PINOT WY
65.4	X				LATERAL S
30.3					CNTR MANHOLE 2529
00					MAN HLE 2529
17.1				X	LATERAL S

REMARKS & REPAIRS NEEDED

CAMERA TURNED OVER WITH TO LATER DATE—

GREASE IN LINE

Direction of Measurement
From Center of Manhole

manhole Id. #

manhole Id. #

No.# of Laterals;

No.# of Lots

4	1
3	2

Quadrant Nos.

City of St. Helena

Sanitary Sewer Work Sheet

Street Charter Oak
Manhole Id. #
from 952
To Allison
Date 11-16-98
pipe size 8 in 8 out
type of pipe PVC in PVC out PVC
Manhole
Type
Condition

Distance reading	quadrant 1	2	3	4	REMARKS
000					manhole 952 Charter Oak
25.8	X				Lateral
74.1	X				Lateral
113.5	X			X	Lateral top of Pipe
230.4	X				Lateral
123.1	X				
202.8				X	
67				X	Lateral
251.1	X				Lateral

REMARKS & REPAIRS NEEDED

Started to T.V. too much grease
Brought out Rodder to clean
and T.V.

Direction of Measurement
From Center of Manhole

manhole Id. #

manhole Id. #

No.# of Laterals;

No.# of Lots

4	1
3	2

Quadrant Nos.

City of St. Helena

Sanitary Sewer Work Sheet

" Street Charter Oak
Manhole Id. #
from TRA UIO NE
To Charter House
Date 11-16-98
pipe size in 8 out 8
type of pipe in PVC out PVC
Manhole —
Type
Condition

Distance reading	quadrant 1	2	3	4	REMARKS
0.0					manhole
35.0				X	Lateral (N) (4 RD Uigus)
38.0	X				Lateral (S)
96.3	X				Lateral (S)

REMARKS & REPAIRS NEEDED

Direction of Measurement
From Center of Manhole

manhole Id. #

manhole Id. #

No.# of Laterals;

No.# of **Lots**

32.11
2/13/99

4	1
3	2

Quadrant Nos.

Woodbridge

City of St. Helena

Sanitary Sewer Work Sheet

" Street

Manhole Id. #
from
To

Date

pipe size in out

type of pipe in out

Manhole
Type
Condition

istance reading	quadrant 1	2	3	4	REMARKS
000					manhole
88				X	Lateral
92	X				Later
100'					under water
105					out of water
145'					under water
~~125~~ 185					out of ~~water~~ water
200'					manhole

REMARKS & REPAIRS NEEDED

Direction of Measurement
From Center of Manhole

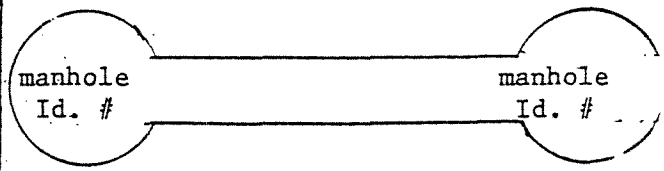

No.# of Laterals;

No.# of **Lots**

Quadrant Nos.

City of St. Helena

Sanitary Sewer Work Sheet

Street	BROWN
Manhole Id. #	
from	
To	
Date	1-3-00
pipe size	6 in 6 out
type of pipe	in out
Manhole	
Type	
Condition	

Distance reading	quadrant 1	2	3	4	REMARKS
2.6					MAN HOLE
17.8	X				(MAIN) LATERAL FROM SPRING
20				X	LATERAL 4
30				X	LATERAL
32	X				6" LATERAL
46				X	LATERAL
52'					CHIP IN TOP OF PIPE
58'	X				LATERAL
70.5				X	LATERAL
76					ROOTS TOP
76.6				X	LATERAL ROOTS
80					ROOTS
81.7					ROOTS
84.3	X				LATERAL
96.6				X	LATERAL
110	X				LATERAL
116	X				LATERAL
122				X	LATERAL
130	X				LATERAL
134	X				LATERAL
147				X	LATERAL
157					ROOTS
160					ROOTS
166.4	X				LATERAL
174				X	LATERAL
184					CLEAN OUT TOP
186	X			X	LATERAL
197	X				LATERAL
210	X				LATERAL
223	X				LATERAL
226					ROOTS
231					ROOTS
232					ROOTS
237	X				ROOT LATERAL

REMARKS & REPAIRS NEEDED

Direction of Measurement
From Center of Manhole

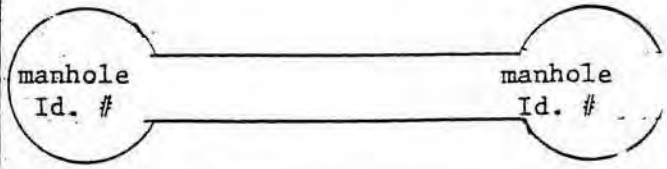

No.# of Laterals;

No.# of Lots

4	1
3	2

Quadrant Nos.

City of St. Helena

Sanitary Sewer Work Sheet

" Street

Manhole Id. #
from
To

Date

pipe size in out

type of pipe in out

Manhole
Type
Condition

istance reading	quadrant 1	2	3	4	REMARKS
251				x	Lateral
265	x				Lateral
277				x	Lateral
289	x				Lateral
303				x	Lateral
317	x				Lateral
329				x	Lateral
343					"Grease"

REMARKS & REPAIRS NEEDED

Direction of Measurement
From Center of Manhole

manhole Id. #

manhole Id. #

No.# of Laterals;

No.# of **Lots**

Outreach to Plumbers & Sewer Contractors

Plumbers & Sewer Contractors: Your Actions Can Prevent Sanitary Sewer Overflows!

What are Sanitary Sewer Overflows or SSOs?

SSOs discharge untreated or partially treated human and industrial waste, debris and disease-causing organisms from the sanitary sewer onto the ground near and into homes and potentially into creeks, rivers, lakes or streams.

What are the impacts of SSOs?

SSOs may result in property damage, environmental damage and/or potential liability to you or your company. Allowing sewage to discharge to a gutter, storm drain or waterway may subject you to penalties and/or out-of-pocket costs to reimburse cities or public agencies for clean-up efforts and regulatory penalties.

How can you prevent SSOs?

and avoid associated penalties & fines

When clearing plugged sewer laterals:

- ☑ Whenever possible, remove root balls, grease blockages and any other debris; don't push debris from the lateral to the sewer main.
- ☑ If you can't prevent a root ball or other debris from entering the sewer main when working in our service area, **please call us** at (707) 968-2658, so we can work with you (free of charge) to remove the root ball from the sewer main to prevent blockages further downstream.
- ☑ Use plenty of water to flush lines.
- ☑ Don't open manholes. Hazardous sewer gases from manholes are odorless, undetectable and can be deadly. Call us to open manholes for you and please note that discharge into a publicly-owned manhole requires a permit. Contact us at (707) 968-2658, for an application.

When constructing sewer laterals:

- ☑ Check your work area. Gravel, backfill material and test plugs can become lodged in the sewer line and cause blockages. Make sure no debris is left in the sewer line before you backfill.
- ☑ Avoid offset joints – offset joints make sewer lines vulnerable to root intrusion & grease accumulation, cause debris hang-ups and make lines harder to clean. Properly bed your joints and don't hammer tap.
- ☑ In the City of St. Helena service area, contact us for the appropriate construction specs at (707) 968-2658.

Who Do I Call to Avoid an SSO?

Help us help you…

If you require our free assistance to help clear root balls, grease blockages and other debris from a main sewer line to prevent an SSO or to open a manhole in our service area, please call us at:

(707) 968-2658

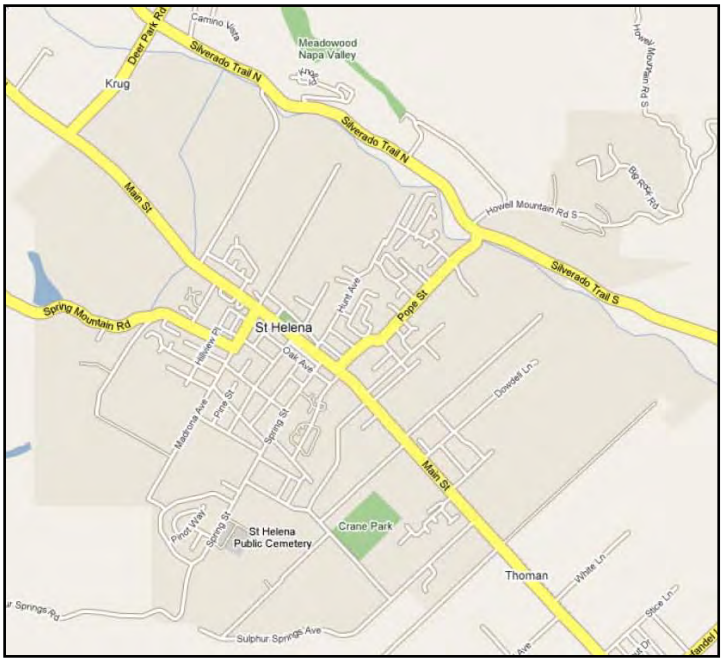

Bay Area Clean Water Agencies
A Joint Powers Public Agency

BAPPG

CITY OF ST. HELENA

Training Attendance Form

City of St. Helena
Collection System Staff
Training Sign-In

DATE: _____

TITLE OF TRAINING SESSION: _____

NAME	SIGNATURE

INSTRUCTOR: _____

INSTRUCTOR SIGNATURE: _____

5.0 Design and Construction Standards

5 Design and Performance Provisions

5.1 Standards for Installation, Rehabilitation and Repair

Section 6 (Sanitary Sewer System) of the City of St. Helena Water and Sewer Standards (Resolution No. 93-58, Adopted June 22, 1993, attached) includes design criteria as outlined below. These Standards are periodically reviewed, and updated as necessary.

6-1.01: Materials
6-1.02: Acrylonitrile-Butadiene-Styrene (ABS) Pipe
6-1.03: Polyvinyl Chloride (PVC) Pipe
6-1.04: Ductile Iron Pipe (DIP)
6-1.05: Excavation and Backfill
6-1.06: Existing Manholes
6-1.07: Pipe Laying
6-1.08: Sewer Structures
6-1.09: Testing of Sewers
6-1.10: Trench Resurfacing
6-1.11: Mandrel Test

6-2.01: Permits
6-2.02: Pipe Size
6-2.03: Grades and Alignment
6-2.04: Backflow Device
6-2.05: Independent Systems
6-2.06: Cleanouts
6-2.07: Fittings
6-2.08: Proximity to Wells
6-2.09: Connecting to Existing Buildings
6-2.10: Connection to Existing Sewers
6-2.11: Material
6-2.12: Pipe Cover and Clearance

In addition to written specifications for the design and construction of the sanitary sewer system, standard drawings are included for the Sewer Division, as listed below:

201 - Standard 48" diameter precast concrete manhole sanitary sewer
202 - Standard 60" diameter precast concrete manhole sanitary sewer
203 - Inside drop in sanitary sewer manhole
204 - Outside drop in sanitary sewer manhole
205 - Temporary mainline cleanout
206 - Temporary mainline cleanout
207 - Abandoned pipe plug detail
208 - Abandoned manhole detail
209 - Standard precast concrete manhole reducer slab sanitary sewer
210 - Standard manhole frame and cover
211 - Sewer service lateral
212 - Sewer service lateral
213 - Pipe-structure crossing detail
214 - Plastic sewer pope deflection mandrel
215 - Precast grease interceptor
216 - Sand and grease interceptor
217 - Sampling manhole exterior use
218 - Sampling box building interior
219 - Cleanout detail at building
220 - Typical service sewer connection details
221 - Backwater check valve installation
222 - Service sewer trench detail
223 - Sewer separation requirements

5.2 Standards for Inspection and Testing of New and Rehabilitated Facilities

Inspection and testing of new facilities is important to ensure that the City's established standards are implemented in the field. Using the legal authority described earlier in the SSMP, completed construction is not accepted by the City until inspection and testing have been completed. This approach helps ensure proper operation and maximum life expectancy. The City has added to their Sanitary Sewer System Standards a requirement for a CCTV inspection prior to accepting a lateral or issuing a Certificate of Occupancy for a new connection.

The City's process for testing Public Sewer Mains and Private Laterals is as follows:

1. Video inspection is required of all construction to ensure proper construction and to confirm connections and fit is as required.
2. Test by other means is also required using one of the following methods:
   a. Pressure Test: Pressure testing is required under 4 pounds per square inch (PSI) for a minimum of 4 minutes with a maximum allowable pressure drop of 0.5 PSI. If the pressure drops more than this amount, then re-pressurize to 3.5 PSI and hold for additional 4 minutes. Pressure must not drop below 3 PSI during this retest.
   b. Hydrostatic Test: All manholes and isolated laterals shall be tested by plugging at the main connection(s) and then filling structure or lateral with water. The water shall not exceed the allowable loss (for a four hour period), as determined by the City Engineer.

Inspection and testing of new wastewater collection facilities may be conducted by Wastewater Collection staff or by the contractor while an inspector representing the City makes sure the installation and testing meets the City's standards. Inspections are performed during and at the completion of construction.

5.0 Design and Construction Standards

Attachments

Sanitary Sewer System

Design & Construction Standards

CITY OF ST. HELENA

WATER AND SEWER STANDARDS

ADOPTED JUNE 22, 1993
RESOLUTION NO. 93-58

STREET, STORM DRAIN & SIDEWALK STANDARDS

ADOPTED JUNE 23, 1998
RESOLUTION NO. 98-57

SECTION 6 SANITARY SEWER SYSTEM

6-1.01 Materials. Sewer pipe shall be ductile iron pipe, acrylonitrile-butadiene-styrene pipe or polyvinyl chloride pipe.

6-1.02 Acrylonitrile-Butadiene-Styrene (ABS) Pipe. ABS solid wall pipe shall conform to ASTM Designation D-2751, and shall have a wall thickness of not less than SDR35.

Cement used for all ABS pipe joints shall conform to paragraph 6.4 of ASTM D-2680. No primer shall be used in ABS installations. Jointing shall be accomplished by applying a coating of cement to the inside of the socket and to the outside of the spigot end of pipe to be joined in sufficient quantity that when the spigot is fully inserted into the socket, a bead of excess cement will form around the entire circumference of the outside juncture of said spigot and socket. Excess cement shall then be removed.

All pipe shall have a home mark to indicate full penetration of the spigot when the joint is made.

All ABS pipe entering or leaving a concrete structure shall have a standard manhole gasket, as supplied by the pipe manufacturer, firmly clamped around the pipe exterior and cast into the structure base or near the structure wall center as a water stop.

After the pipe installation and placement and compaction of backfill, but prior to placement of pavement, all pipe shall be cleaned and then mandrelled to measure for obstructions. Obstructions shall include, but not be limited to deflections, joint offsets, and lateral pipe intrusions. A rigid mandrel, with an effective circular cross section having a diameter of at least 95% of the specified average inside diameter shall be pulled through the pipe by hand. The minimum length of the circular portion of the mandrel shall be corrected by the Contractor. Obstructions due to deflection shall be corrected by replacement of the over-deflected pipe, not by re-rounding in place.

If a section of pipe fails to meet the mandrel test and is reinstalled and fails the second time, said section(s) of pipe shall be replaced with an approved rigid pipe material.

The manufacturer shall furnish to the City of St. Helena a 5% deflection mandrel and proving ring as shown on the standard drawings for retention and use during testing.

The average inside diameter for ABS Solid Wall Sewer Pipe shall be the "Average Outside Diameter" (see ASTM D2751) minus 2.12 times the "Minimum Wall Thickness" (see ASTM D2751).

The Contractor shall retest the solid wall pipe using a mandrel with an effective circular cross section having a diameter of at least 95% of the specified average inside diameter eleven (11) months after recordation of Notice of Completion of the contract or after the acceptance by the

directors of a subdivision. Any pipe which fails to pass the mandrel test shall be replaced at the expense of the Contractor. The City reserves the right to determine the longitudinal limits of

any pipe that is required to be replaced. Pipe replacement shall be guaranteed by the project maintenance bond.

6-1.03 Polyvinyl Chloride (PVC) Pipe. PVC solid wall sewer pipe and fittings for gravity sewers shall be made for all new, rigid, unplasticized polyvinyl chloride in accordance with ASTM Standard Specifications D3034 and F-679 and shall have a wall thickness of at least SDR 35. Joints shall consist of an integral thickened bell-and-rubber ring and shall conform to ASTM D3212. Gaskets shall conform to ASTM E477. Joints shall be assembled using only manufacturer's recommended lubricant.

All pipe shall have a home mark to indicate full penetration of the spigot when the joint is made.

All PVC pipe entering or leaving a concrete structure shall have a standard manhole gasket, as supplied by the pipe manufacturer, firmly clamped around the pipe exterior and cast into the structure base or near the structure wall center as a water stop.

After pipe installation and placement and compaction of backfill, but prior to placement of pavement, all pipe shall be cleaned and then mandrelled to measure for obstructions. Obstructions shall include, but not be limited to deflections, joint offsets and lateral pipe intrusions. A rigid mandrel, with an effective circular cross section having a diameter of at least 95% of the specified base inside diameter shall be pulled through the pipe by hand. The minimum length of the circular portion of the mandrel shall be equal to the nominal diameter of the pipe. All obstructions encountered by the mandrel shall be corrected by the Contractor. Obstructions due to deflection shall be corrected by replacement of the over-deflected pipe, not by re-rounding in place.

If a section of pipe fails to meet the mandrel test and is reinstalled and fails the second time, said section(s) of pipe shall be replaced with an approved rigid pipe material.

The manufacturer shall furnish to the City of St. Helena a 5% deflection mandrel and proving ring as shown on the standard drawings for the City's retention and use during testing.

The average inside diameter for PVC Solid Wall Sewer Pipe shall be the "Average Outside Diameter" (see ASTM D3034 and F679) minus 2.12 times the "Minimum Wall Thickness" (see ASTM D3034 and F619).

The Contractor shall retest the solid wall pipe using a mandrel with an effective circular cross section having a diameter of at least 95% of the specified average inside diameter eleven (11) months after recordation of Notice of Completion of a sewer contract or after the acceptance by the directors of a subdivision. Any pipe which fails to pass the mandrel test shall be replaced at the expense of the Contractor. The City reserves the right to determine the longitudinal limits

of any pipe that is required to be replaced. Pipe replacement shall be guaranteed by the project maintenance bond.

6-1.04 Ductile Iron Pipe (DIP). Ductile iron pipe shall be cement lined, new pipe conforming to ANSI. A 21.51-1976 or most recent issue, if any, as sponsored by the American Water Works Association for thickness class 50 Ductile Iron Pipe. The pipe shall be furnished with either bell and spigot ends, "Tyton Joints", or mechanical joints except where specifically specified on the plans.

All ductile iron pipe buried underground shall be encased in polyethylene film in the tube form. Polyethylene material and installation procedure for the encasement shall conform to ANSI/AWWA C105/A21.5-82 or most recent issue, if any. Installation Method "A" as described in aforementioned specification shall apply.

Couplings for connection to the sewer main shall be of a type approved by the City Engineer.

6-1.05 Excavation and Backfill. Excavation and backfill shall be as shown on Standard 401, "Standard Trench Detail" of the standard drawings.

All stumps and large roots encountered during trenching operations shall be removed to the satisfaction of the City Inspector. The trench shall be opened sufficiently ahead of the pipe laying operations to reveal obstructions. Trench crossings shall be provided as necessary to accommodate public travel and to provide convenient access to adjacent properties. Flow shall be maintained in any sanitary sewers, storm drains, water lines, or water courses encountered in trenching.

All cutting, handling and disposal of asbestos cement pipe shall be done in accordance with the Contractor's State Licensing Law and all applicable laws and regulations.

6-1.06 Existing Manholes. Existing manholes and cleanouts located within the street right-of-way shall be adjusted to conform to finished pavement grades in accordance with the details shown on the plans.

Prior to the removal of an existing manhole frame, a platform shall be constructed in the manhole above the top of the sewer to prevent any dirt or debris from falling into the sewer. The platform shall remain in place until all work on the manhole has been completed and the

asphalt concrete has been placed around the manhole. Prior to the removal of the platform from the manhole, all dirt and debris shall be removed.

Lowering of the manhole ring and cover shall be accomplished by the removal of existing concrete grade rings below the manhole ring or by removing the upper section of manhole barrel and substituting therefore a shorter section of barrel.

At the Contractor's option, in lieu of removing and replacing barrel sections as above provided, the top of the existing upper barrel section may be trimmed and the taper section replaced on such trimmed surface provided, however, that such trimming shall not crack or otherwise damage the remaining portion of barrel section.

In the event that the portion of barrel section to remain is cracked or damaged, or otherwise made unsuitable for use by such trimming, the entire section shall be removed and replaced with a new section of barrel. Trimming of taper sections will not be permitted.

All sections of the manhole shall be set in cement mortar or in approved gasket material. Trim excess gasket material and plaster inside joints smoothly. Manhole sections set in cement mortar shall be smoothly plastered inside and out.

After placing the surface course of asphalt concrete, all manholes and cleanouts shall be located and marked with white paint before the close of that work day.

Within two working days of paving, all manholes and cleanouts shall be adjusted to grade and inspected.

6-1.07 Pipe Laying. Where ground water occurs, pumping shall continue until backfilling has progressed to a sufficient height to prevent flotation of the pipe. Water shall be disposed of in such a manner as to cause no property damage or not be a hazard to public health or the environment.

Where projects consist of construction or new mains or extensions of existing mains, contractors must make provisions to keep flow from entering the sewer collection system. This shall include the installation of a positive sealing plug on the outlet of the new mains closest manhole to the existing main. Additionally, if any new laterals enter the new main between the existing main and the closest manhole on the new main, each lateral shall be individually plugged with a positive sealing plug. The Contractor shall be held responsible to periodically check that all plugs are holding tight. The Contractor shall ensure that the water contained in the new main is not contaminated with human or hazardous waste, prior to removal of any plugs. The Contractor shall make provisions to dewater the new mains without disposal into the sewer collection system and without cause of property damage or hazard to the public health or environment. Failure to comply may result in penalties.

Where construction consists of constructing a new main or extension of an existing main, the downstream end of the new main shall be securely closed with a tight fitting plug until the construction is accepted by the City.

If the new sewer main is connecting to an existing main at a location other than an existing manhole, the Contractor shall pothole the existing sewer main to verify invert grades and locations.

Sewer pipe shall be installed on the alignment and grade as shown on the plans and in accordance with the Standard Specifications, or as directed by the City Engineer. Existing sewer laterals shall be removed and replaced at the locations shown on the plans, or as directed by the City Engineer.

Sewer pipe shall be laid in straight lines and on uniform rates or grade between points where changes in alignment or grade shall be free of foreign matter before lowering into the trench.

The pipe manufacturer's written instructions covering the installation of his pipe shall be closely followed unless otherwise directed by the City or these Special Provisions. The trench shall not be backfilled until authorized by the City Inspector. Pipe laying shall proceed upgrade with the spigots pointing in direction of flow.

Electro-optical grade setting devices must be used and shall be operated by a person proficient in its operation.

Any section of pipe found to be defective or which has had grade or joints disturbed shall be re-laid by the Contractor at his expense.

Proper implements, tools and facilities satisfactory to the City shall be provided and used by the Contractor for the safe and efficient execution of the work. All pipe, fittings and accessories shall be carefully lowered into the trench by means of derrick, straps or other suitable equipment in such a manner as to prevent damage to pipe and fittings. Under no circumstances shall pipe or accessories be dropped or dumped into the trench. The pipe and accessories shall be inspected for visible defects prior to lowering into trench. Any visibly defective or unsound pipe shall be replaced.

The line and grade of existing utilities shall not be altered. Any leakage caused in existing utilities by reason of the Contractor's operations shall be immediately repaired at the Contractor's expense.

Existing storm drains shall be supported or removed and replaced at the Contractor's option. In any case, the Contractor shall be responsible for maintaining the existing line and grade of the storm drains.

Existing water lines shall be supported in place with service maintained during construction. The Contractor shall be responsible for any damage resulting from improper backfilling.

Existing sewer lines shall be supported in place with service maintained during construction. The Contractor may, at his option, remove and replace any sewer laterals which are not in use during construction. The Contractor shall be responsible for damage to sewer lines during construction and any damage resulting from improper backfilling.

Sewer lateral inverts shall be set above the mid-point of the water main.

6-1.08 Sewer Structures. Manholes shall be standard precast concrete manholes as detailed on STD DWG 201 and STD DWG 202. Mains larger than 18" in diameter or deeper than eight feet require 60" diameter manholes. Such pre-cast bases shall be placed on a minimum 12-inch thick cushion of drain rock. The drain rock shall extend a minimum of 6-inches beyond the outside edges of the base.

With the approval of the City Engineer, manhole bases may be poured-in-place concrete on undisturbed earth. The bases shall be poured full thickness against the side of the manhole excavation or to dimensions shown on the plans. The manhole excavation site shall be dewatered before pouring.

Concrete for manhole bases shall be Class A portland cement concrete conforming to the applicable requirements. The portland cement shall be Type V conforming to ASTM designation: C 150 or low alkali Type II cement meeting the requirements for Type V cement.

Where steel reinforcement is required in manhole base construction, such reinforcement shall be furnished and placed as shown on the plans and in accordance with the applicable provisions.

When using poured-in-place manhole bases, the base slab and initial riser section shall be connected with integrally poured concrete to create a watertight joint. Flow channels shall be constructed as shown on the plans. Changes in size or grade shall be made gradually and changes in direction by smooth curves. All finished surfaces shall be smoothly troweled with a steel trowel. All manhole barrels and taper section shall be precast concrete sections using Type V portland cement complying with ASTM designation: C 150 or low-alkali Type II cement meeting the requirements for Type V cement.

The 48-inch and 60-inch diameter barrels and taper sections shall be constructed in accordance with the applicable provisions of ASTM designation; C 478 and shall be inspected by the City to determine that the interior surfaces are smooth and free of pockets or depressions.

Manhole frames and covers shall be in accordance with STD DWG-211.

At locations where sewer is to be installed into or out of existing manholes, the manhole wall and base shall be chipped to accept the new size of pipe and to form a flow channel in the manhole base. The Contractor shall dry pack around the pipe between the pipe and the chipped out opening. The Contractor shall also backfill the area around the pipe with concrete to insure a watertight connection.

Mainline cleanouts shall be installed per STD DWG 205 or 206 at the locations shown on the plans.

All joints in manholes shall be sealed by means of a preformed self-bonding, self-sealing plastic gasket, such as "Ram-Nek", manufactured by the K.T. Snyder Company, Houston, Texas, or

approved equal. Joint seals shall be installed in full compliance with the manufacturer's current recommendations.

After placing the surface course of asphalt concrete, all manholes and cleanouts shall be located and marked with white paint before the close of that work day.

Within two working days of paving, all manholes and cleanouts shall be adjusted to grade and inspected.

6-1.09 Testing of Sewers. Testing of all portions of the sewer including manholes will be required. All tests shall be completed and approved prior to placing of permanent resurfacing.

For either exfiltration or infiltration test, the maximum leakage shall not exceed 250 gallons per inch of pipe diameter per mile per 24 hours as measured over a period of 30 minutes minimum. Should the leakage exceed the maximum allowable rate, the Contractor shall repair, overhaul, or rebuild the defective portion of the sewer line to the satisfaction of the City at no additional cost to the City. After repairs have been completed by the Contractor, the line shall be retested as specified above, all at no cost to the City.

The test shall be performed after the line has been laid and all backfill placed and compacted as specified elsewhere in these specifications. The Contractor, at his option, may test the line at any time during construction. However, the final test for acceptance shall be made only after all backfill is in place and compacted.

In the event that the exfiltration test prescribed above is impractical due to wet trench conditions, these portions of the sewer line where such conditions are encountered will be tested for infiltration. The City Engineer shall determine whether the exfiltration or infiltration test will be used.

Even though the test for leakage is within the prescribed limits, the Contractor shall repair any obvious leaks.

Low pressure air testing may be used in lieu of water testing at the option of the Contractor. Water testing may be required by the City Engineer. The following procedure shall be used for air testing.

1. Clean pipe to be tested by propelling a snug fitting inflated rubber ball through the pipe with water. Remove any debris.

2. Plug all pipe outlets with suitable test plugs. Brace each plug securely.

3. If the pipe to be tested is submerged in ground water, Inspector may require that gauge pressures be increased to compensate for groundwater hydrostatic pressure.

4. Add air slowly to the portion of the pipe installation under test until the internal pressure is raised to 4.0 p.s.i.g.

5. Check exposed pipe and plugs for abnormal leakage by coating with a soap solution. If any leakage is observed, bleed off air and make necessary repairs.

6. After an internal pressure of 4.0 p.s.i.g. is obtained, allow at least two minutes for air temperature to stabilize, adding only the amount of air required to maintain pressure.

7. After the two minute period, disconnect the air supply.

8. When pressure decreases to 3.5 p.s.i.g., start stop watch. Determine the time in seconds that is required for the internal air pressure to reach 2.5 p.s.i.g. The minimum allowable time in seconds shall be based on the diameters and lengths of pipe under test. The Contractor will be allowed to manually bleed air as required to drop to internal pressure to 3.5 p.s.i.g. to start test, of desired.

Air test data sheets and nomograph with directions for computing the specifications time are available at the City Engineer's office.

The Contractor shall hire an independent television inspection service to perform a closed-circuit television inspection of all newly constructed sewers. A video tape of the television inspection shall be produced and delivered to the City in color VHS format, together with a typed log of their inspection.

The following conditions shall exist prior to the television inspection:

a. All sewer lines shall be installed, backfilled and compacted;
b. All structures shall be in place, all channeling complete and all pipelines accessible from structures;
c. All other underground facilities, utility piping and conduit within two feet of the sewer main, shall be installed;
d. All compaction required shall be completed;
e. Pipelines to be inspected shall be balled, flushed and mandrel tested;
f. The final air or water test shall have been completed;
g. Immediately before the television inspection, run fresh water into the sewer until it passes through the downstream manhole. During the test water shall not be allowed to flow through sewer system.

When the above work has been completed, the Contractor shall notify the City 48 hours in advance of the date for television inspection. During this inspection, the Contractor or his authorized representative shall be present to observe the video pictures as provided by the television camera (i.e. while camera is being pulled through system).

When required by the City Engineer, sewer laterals shall be inspected by closed circuit television. Also, when required, existing systems at connection points of new system shall be inspected by closed circuit television. The Contractor shall be responsible for all associated costs.

The following video tape observations shall be considered defects in the construction of the sewer pipelines and will require corrections prior to acceptance:

a. Off grade - 0.05 for 6" mains
   0.08 for 8" and larger mains, or over
b. Joint separations - over 1/2" - deviation from grade
c. Offset joints or pipe out of round
d. Chips in pipe ends - non more than ¼" deep
e. Cracked or damaged pipe or evidence of the presence of an external object bearing upon the pipe (rocks, root, etc.)
f. Infiltration
g. Debris or other foreign objects
h. Other obvious deficiencies when compared to approved plans and specifications, these Standards and Standard Drawings.
i. Low spots - 1/2" maximum depth

The Contractor shall be notified in writing of any deficiencies revealed by the television inspection that will require repair, following which the Contractor shall excavate and make the necessary repairs and request a television reinspection. Television reinspection shall be at the Contractor's expense.

6-1.10 Trench Resurfacing. Trench resurfacing shall be as shown on STD DWG 401, "Standard Trench Detail".

6-1.11 Mandrel Test. The maximum allowable vertical deflection for sewer lines is 5% of the pipes average inside diameter. Vertical deflection shall be measured by means of a rigid "Go/No Go" gauge (Mandrel). The Contractor shall be responsible for supplying the Mandrel to be used and it must be acceptable and approved by the City prior to conducting the tests.

Prior to testing, the sewer line shall be free of debris that might cause the gauge to jam. It is recommended that the Contractor clean the line with a hydro-cleaner prior to insertion of the "Go/No Go" gauge.

The procedure for testing shall be in accordance with City of St. Helena Standards.

6-2 SANITARY SEWER LATERALS

6-2.01 Permits. No building sewer or lateral sewer shall be installed, altered or repaired nor any connection made thereto, until a permit for the work has been obtained from the City and the necessary fees paid.

Sewer permits can be issued prior to main line construction but trenches and laterals cannot be constructed or inspected until all main line constructions are completed, tested and approved by the City Inspector and accepted by the City.

6-2.02 Pipe Size. Service sewers shall be sized in accordance with the latest edition of the Uniform Plumbing Code, but in no case smaller than four (4) inches.

6-2.03 Grades and Alignment. Service sewers shall be run in practical alignment at a uniform slope of not less than ¼" per foot toward the main sewer; provided that where it is impractical due to the depth of the main sewer or to the structural features or the arrangement of any building or structure, to obtain a slope of ¼" per foot, any such piping may have a slope of not less than 1/8" per foot when approved by the City Engineer.

6-2.04 Backflow Device. A backwater check valve shall be installed in the building sewer line at a location approved by the City Engineer whenever the building has a finished floor elevation twelve (12) inches or less above the top elevation of the nearest upstream manhole or cleanout. Backwater check valves shall be cast iron or cast bronze. Backwater check valves shall be approved by City Engineer prior to installation.

6-2.05 Independent Systems. Each building shall have an independent connection to a main sewer except that where the City Engineer determines that it will not be detrimental to the interest of the applicant or the City. Multiple structures may be connected to the same building sewer when located on the same parcel.

The applicant for multiple connections to the same building sewer shall provide a plan to scale (preparation by Civil Engineer is recommended but not required) showing:

a. The location of all physical features such as buildings, trees, creeks, paved areas, building drain outlets, etc.

b. Existing and proposed sewers, including size, alignment, lengths, grades, elevations, cleanouts, etc.

c. Ground elevations at critical points sufficient to determine that the system is workable and will serve all buildings, using adequate grade and cover. All elevations shall be on National Geodetic Vertical Datum (NGVD).

d. Calculations verifying adequacy of piping size for proposed fixture unit loading. See Uniform Plumbing Code for criteria.

6-2.06 Cleanouts. Cleanouts of the same size as the line they are intended to serve shall be provided as follows:

a. At the point of connection to the building drain.

b. At any single turn greater than forty-five (45) degrees.

c. At intervals along the building sewer when the cumulative total of deflections from the point of connection to the main or from another cleanout exceeds forty-five (45) degrees.

d. At intervals not to exceed one hundred (100) feet along the building sewer.

Cleanouts shall be extended to grade and protected by "Christy" F-8 curb valve boxes, or equal, except that in areas subjected to traffic or where located in traffic areas or sidewalks, "Christy" G-5 traffic valve boxes, or equal, with cast iron lids shall be used. These cleanouts located in traffic areas shall have a 12-inch deep concrete collar poured around the valve box with a minimum outside diameter of at least 20 inches greater than the OD of the top of the box.

6-2.07 Fittings. All bends, where permitted shall be made with long radius fittings.

6-2.08 Proximity to Wells. Building sewers shall not be located closer than 50 feet from an individual domestic well. However, said clearance can be reduced to 25 feet if the building sewer is constructed of ductile or cast iron. Where special hazards are involved, the distance required shall be increased, as may be directed by the Napa County Health Officer. Also, see Bulletin #74 "Water Well Standards", State of California, the Resource Agency Division of Water Resources for additional requirements.

6-2.09 Connecting Existing Buildings. Where an existing building is disconnected from a septic tank and reconnected to a new service sewer, the connection to the new sewer shall be made at the end of the building drain. No portion of the existing piping from the building drain to the septic tank shall be utilized for connecting to the new service sewer unless said piping is exposed and tested to permit the City to determine that it meets all of the requirements for new construction. Waste from the abandoned septic system shall not be allowed to enter the sewer system. Tanks must be pumped out by licensed septic tank waste disposal contractor prior to abandonment of same. The tank shall then be removed or filled with a low strength control density fill material (CDF).

6-2.10 Connection to Existing Sewers. When a contractor makes application to connect to an existing building sewer, and it the City has reason to believe that the sewer is deficient in any

respect, the City Engineer may require the contractor to excavate and/or test the sewer and to repair or replace it if necessary to make sure that it complies with these sewer standards.

6-2.11 Material. Lateral sewer piping and construction shall conform to STD DWG 142 and the requirements contained herein.

Building sewer piping shall be a minimum 4-inch diameter and shall be one of the following:

-Ductile Iron Pipe, ANSI A21.51
-Acrylonitrile-Butadiene-Styrene (ABS Pipe SDR 35)
-Polyvinyl-Chloride (PVC Pipe SDR35) when used with a manufactured "Y" specifically designed for PVC laterals.

The pipe manufacturer's written instructions shall be closely followed in all piping installations.

Any gas, water or electric services or other pipes paralleling a sewer pipe shall be separated from said sewer pipe by a minimum horizontal clear distance of eighteen (18) inches. Such pipes placed in the same trench as a sewer pipe, if above the elevation of said sewer pipe, shall be placed on a solid shelf excavated at one side of the common trench. The bottom of any water service pipe placed in the same trench as a sewer pipe shall be at least twelve (12) inches above the top of said pipe, and as such will require prior approval by the City Engineer.

6-2.12 Pipe Cover and Clearance. **Lateral sewers** - shall be installed at sufficient depth to serve the parcel involved, but in no case less than three (3) feet clear cover at the property line unless specifically authorized by the City Engineer.

Building sewers - shall have a clear cover of eighteen (18) inches minimum from finished grade. Where clear cover is less than eighteen (18) inches, cast iron pipe shall be used. Where building sewers are located or cross driveways of the property, ductile iron pipe shall be used.

In extreme cases such as in rocky terrain or very steep slopes, building sewers may be installed above-ground. Special approval from the City Engineer will be required. In such cases cast iron pipe shall be used along with special supports, anchors, etc. as required by the City Engineer. In such cases the Contractor or Developer's Engineer shall prepare a drawing to scale showing the proposed construction and special details for the City Engineer's approval prior to commencing work.

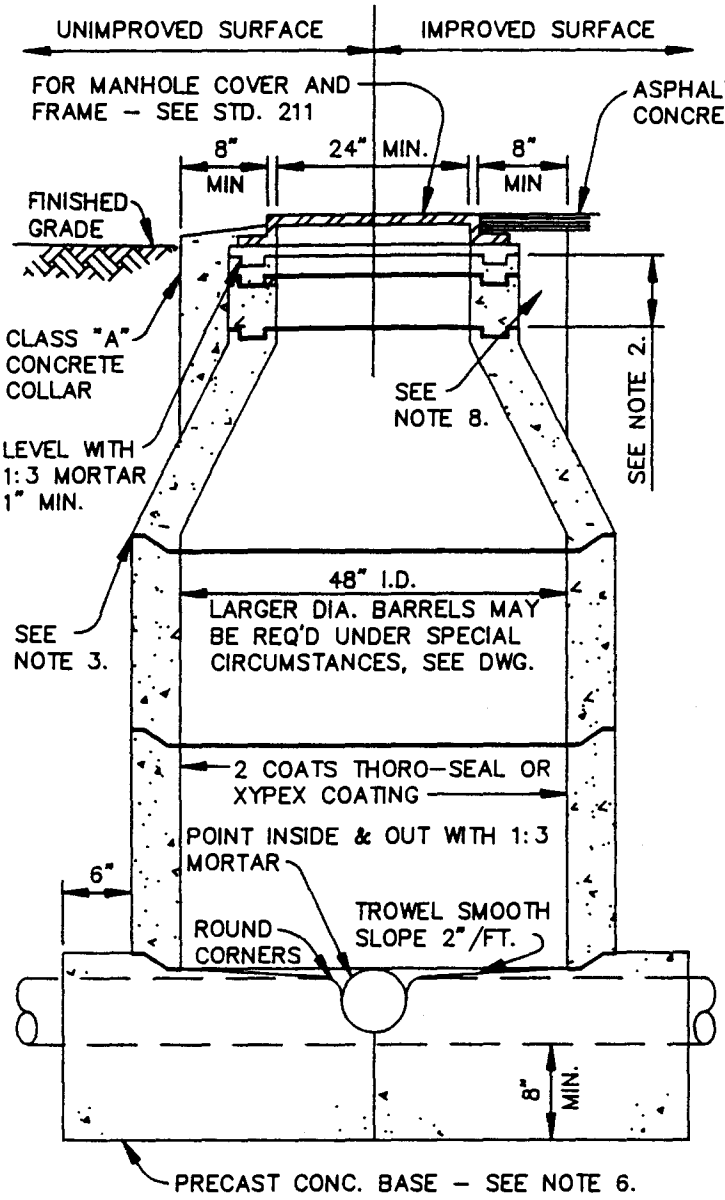

NOTES:

1. WHEN MANHOLES ARE INSTALLED IN UNIMPROVED AREAS, THE TOP OF THE COVER SHALL BE A MIN. OF 1 FOOT ABOVE ADJACENT FINISHED GRADE.
2. MIN. OF ONE 3" AND ONE 6" GRADE ADJUSTMENT RINGS. MAX. HEIGHT OF GRADE ADJUSTMENT RINGS = 20" ALTERNATELY, CONTRACTOR MAY CAST GRADE ADJUSTMENT RINGS IN PLACE.
3. SET ALL BARREL SECTIONS & TAPER SECTIONS IN PLASTIC GASKET, RAM-NEK OR APPROVED ALTERNATE. TYP. JOINT 1-1/2" (3/4" X 2-1/2") RAM-NEK SEAL (2 SEALS IN HIGH WATER TABLE AREAS).
4. CONE SECTION (TAPER) MUST BE CONCENTRIC FOR 48" MANHOLE UNLESS OTHERWISE SPECIFIED AND APPROVED BY THE CITY ENGINEER.
5. POURED-IN-PLACE MANHOLES ONLY ALLOWED WHERE TIEING INTO EXISTING SEWER. CONSTRUCT ALL FLOW CHANNELS OF PIPE WHEREVER POSSIBLE. AFTER LOWER RING SECTION IS SET, BREAK OUT TOP HALF OF PIPE FLUSH WITH INSIDE FACE OF M.H. WALL AND CONSTRUCT SHELF AND U-SHAPED CHANNEL. MAKE ELEVATION CHANGES GRADUALLY AND DIRECTIONAL CHANGES WITH SMOOTH CURVES.
6. POURED-IN-PLACE BASE SHALL BE POURED FULL THICKNESS TO UNDISTURBED SIDES OF EXCAVATION OR SHALL BE FORMED. PRECAST BASE TO BE USED ON ALL NEW SYSTEMS AND PLACED ON 12" THICK 3/4" DRAIN ROCK SUBBASE INSTALLED AGAINST UNDISTURBED EARTH.
7. JOINT BETWEEN BASE AND BARREL TO BE SEALED W/1-1/2" (3/4" X 2-1/2") RAM-NEK SEAL (2 SEALS IN HIGH WATER TABLE AREAS), OR PLASTER 6" FILLET, 1:3 MORTAR.
8. CLASS "A" CONCRETE COLLAR SHALL BE 2" BELOW FINISHED GRADE.
9. STANDARD MANHOLE BARREL SECTION PER ASTM C478.
10. 48" I.D. MANHOLE TO BE USED FOR SEWER MAINS LESS THAN 18" DIAMETER AND LESS THAN 8 FEET DEEP FROM FINISHED GRADE.

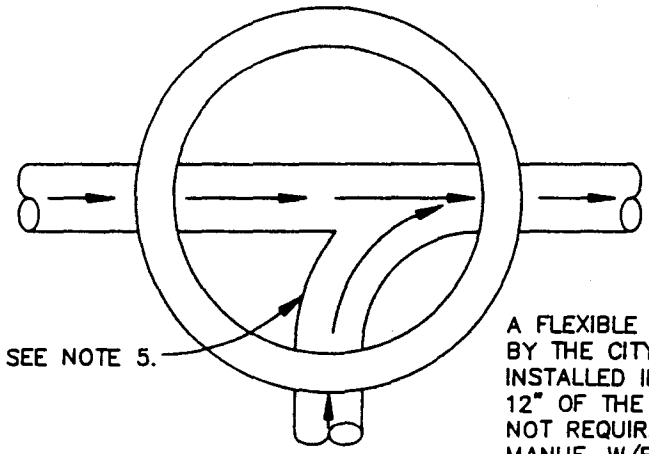

A FLEXIBLE COUPLING, AS APPROVED BY THE CITY ENGINEER, SHALL BE INSTALLED IN THE SEWER MAIN WITHIN 12" OF THE BASE OF THE MANHOLE (TYP). NOT REQUIRED WHEN PRECAST BASES ARE MANUF. W/FLEX CPLGS. ALREADY INSTALLED

MANHOLE BASE
CHANNELIZATION PLAN

SCALE: NONE	CITY OF ST. HELENA	DATE: JUNE 1993
DRAWN: CKM	STANDARD 48" DIA. PRECAST CONCRETE MANHOLE SANITARY SEWER	STD. NO.
CHK: TMS		201
APPVD: MSO		

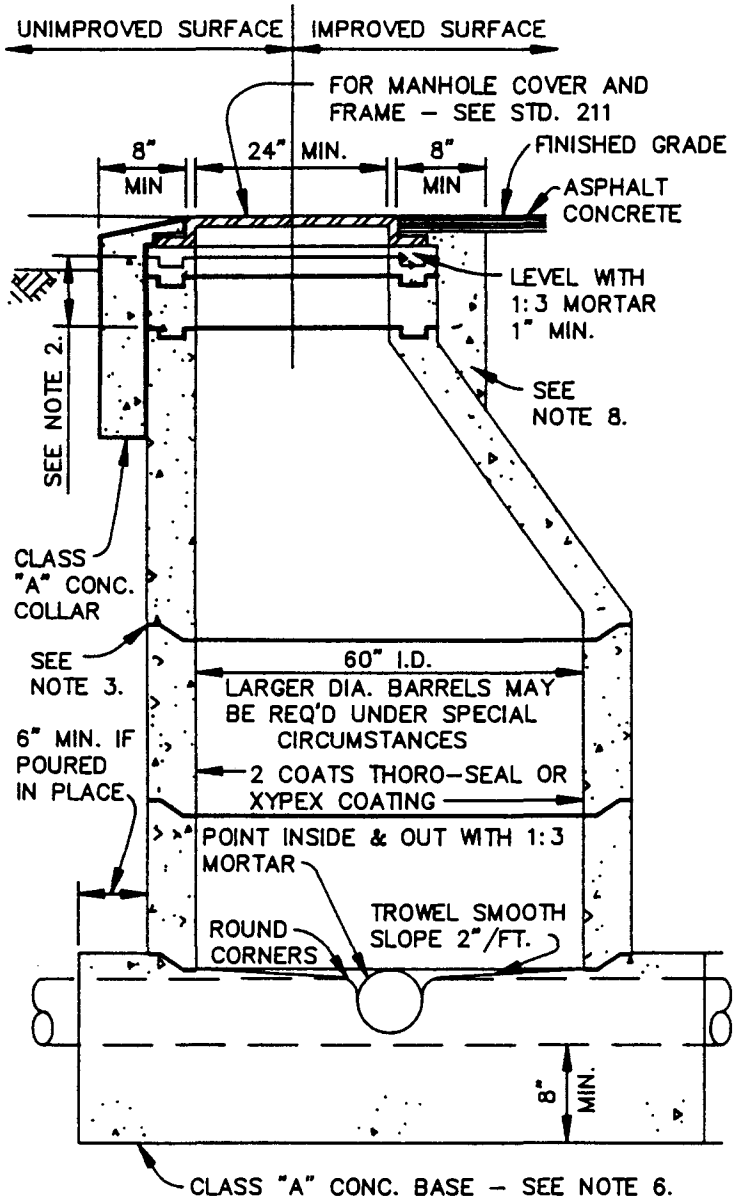

NOTES:

1. WHEN MANHOLES ARE INSTALLED IN UNIMPROVED AREAS, THE TOP OF THE COVER SHALL BE A MIN. OF 1 FOOT ABOVE ADJACENT FINISHED GRADE.
2. MIN. OF ONE 3" AND ONE 6" GRADE ADJUSTMENT RINGS. MAX. HEIGHT OF GRADE ADJUSTMENT RINGS = 20" ALTERNATELY, CONTRACTOR MAY CAST GRADE ADJUSTMENT RINGS IN PLACE.
3. SET ALL BARREL SECTIONS & TAPER SECTIONS IN PLASTIC GASKET, RAM-NEK OR APPROVED ALTERNATE. TYP. JOINT 1-1/2" (3/4" X 2-1/2") RAM-NEK SEAL (2 SEALS IN HIGH WATER TABLE AREAS).
4. CONE SECTION (TAPER) MUST BE ECCENTRIC FOR 60" MANHOLE UNLESS OTHERWISE SPECIFIED AND APPROVED BY THE CITY ENGINEER.
5. POURED-IN-PLACE MANHOLES ALLOWED ONLY WHERE TIEING INTO EXISTING SYSTEM. CONSTRUCT ALL FLOW CHANNELS OF PIPE WHEREVER POSSIBLE. AFTER LOWER RING SECTION IS SET, BREAK OUT TOP HALF OF PIPE PLUSH WITH INSIDE FACE OF M.H. WALL AND CONSTRUCT SHELF AND U-SHAPED CHANNEL. MAKE ELEVATION CHANGES GRADUALLY AND DIRECTIONAL CHANGES WITH SMOOTH CURVES.
6. POURED-IN-PLACE BASE SHALL BE POURED FULL THICKNESS TO UNDISTURBED SIDES OF EXCAVATION OR SHALL BE FORMED. PRECAST BASE TO BE USED ON ALL NEW SYSTEMS AND PLACED ON 12" THICK 3/4" DRAIN ROCK SUBBASE INSTALLED AGAINST UNDISTURBED EARTH.
7. JOINT BETWEEN BASE AND BARREL TO BE SEALED W/1-1/2" (3/4" X 2-1/2") RAM-NEK SEAL (2 SEALS IN HIGH WATER TABLE AREAS), OR PLASTER 6" FILLET, 1:3 MORTAR.
8. CLASS "A" CONCRETE COLLAR SHALL BE 2" BELOW FINISHED GRADE.
9. STANDARD MANHOLE BARREL SECTION PER ASTM C478.
10. 60" I.D. MANHOLE TO BE USED FOR ALL TRUNK AND COLLECTOR SEWERS 18" TO 30" OR WHERE DIMENSION FROM FINISHED GRADE TO THE SEWER FLOW LINE IS GREATER THAN 8'-0", AS INDICATED ON THE DESIGN PLANS.
11. MANHOLES ON TRUNK SEWERS LARGER THAN 30", SHALL BE APPROVED BY THE CITY ENGINEER.

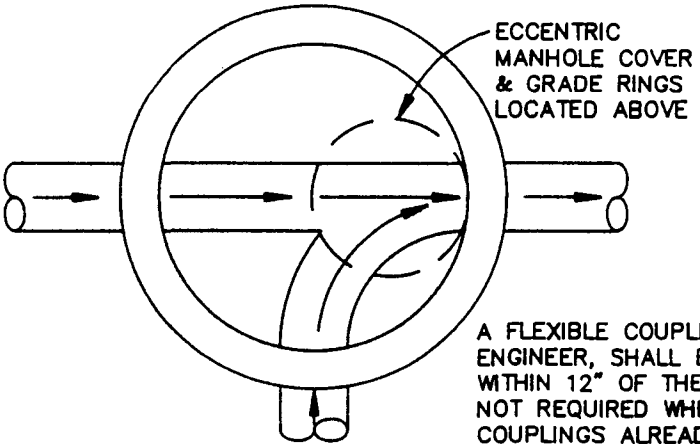

A FLEXIBLE COUPLING, AS APPROVED BY THE CITY ENGINEER, SHALL BE INSTALLED IN THE SEWER MAIN WITHIN 12" OF THE BASE OF THE MANHOLE (TYP). NOT REQUIRED WHEN PRECAST BASES ARE MANUF. W/FLEX COUPLINGS ALREADY INSTALLED.

MANHOLE BASE

CHANNELIZATION PLAN AND LOCATION OF ECCENTRIC MANHOLE COVER

SCALE: NONE	CITY OF ST. HELENA	DATE: JUNE 19[illegible]
DRAWN: CKM	STANDARD 60" DIA. PRECAST CONCRETE. MANHOLE SANITARY SEWER	STD. NO.
CHK: TMS		202
APPVD: MSO		

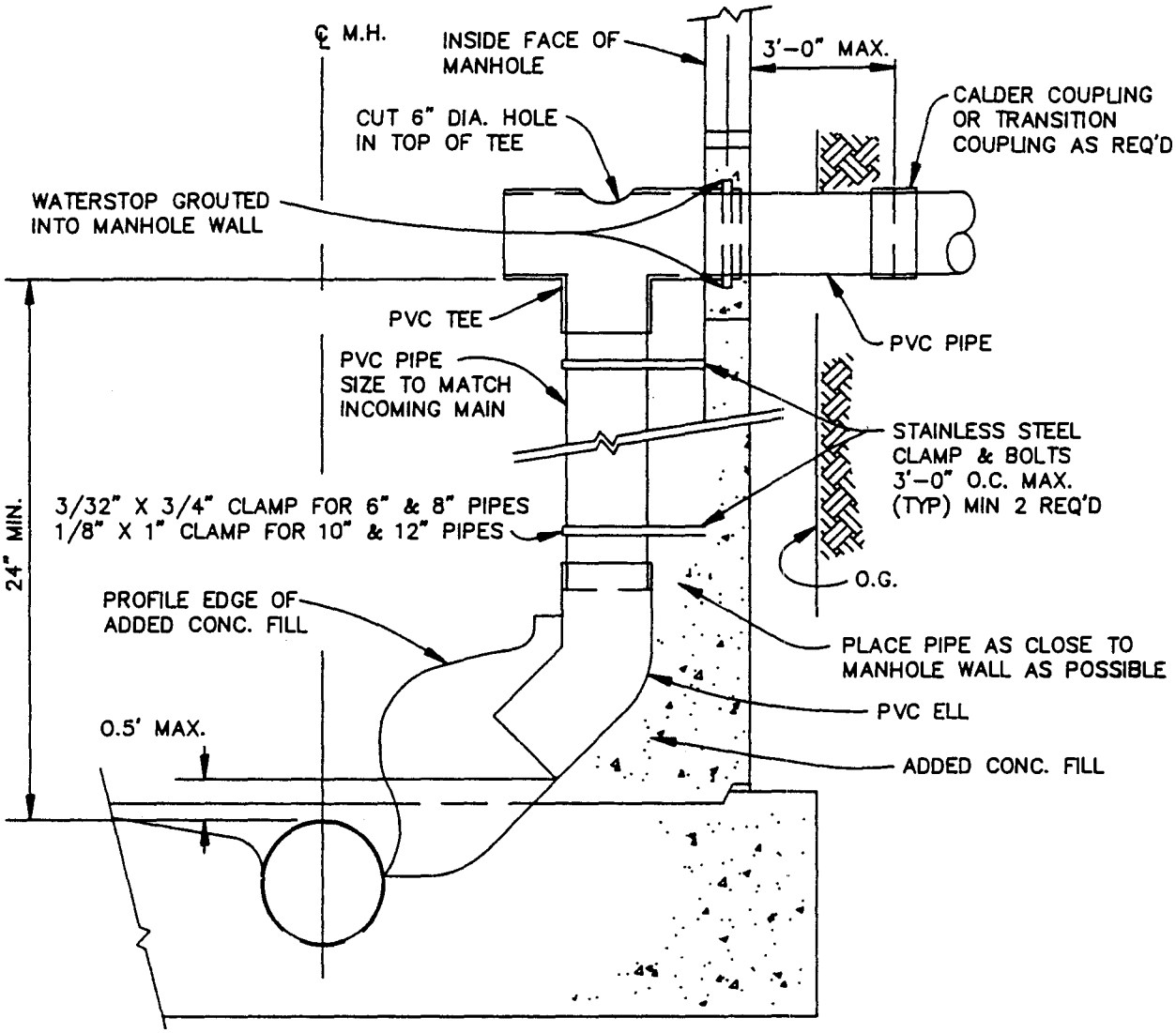

NOTES:

1. INSTALL WATERSTOP IN ACCORDANCE WITH MANUFACTURER'S INSTRUCTIONS AS SHOWN.
2. NEW MANHOLES CONSTRUCTED USING THIS STANDARD SHALL BE 60" IN DIAMETER, AND INSTALLED IN CONFORMANCE WITH STD. 202.
3. ENCLOSE ELL IN CONCRETE. FORM SMOOTH CHANNEL TO MANHOLE FLOWLINE.
4. PVC PIPE AND FITTINGS TO BE SDR 35 OR SCH 40.
5. INSIDE DROP TO BE USED ONLY PER APPROVAL OF CITY ENGINEER.

SCALE: NONE	CITY OF ST. HELENA	DATE: JUNE 1993
DRAWN: CKM	INSIDE DROP IN SANITARY SEWER MANHOLE	STD. NO. 203
CHK: TMS		
APPVD: MSO		

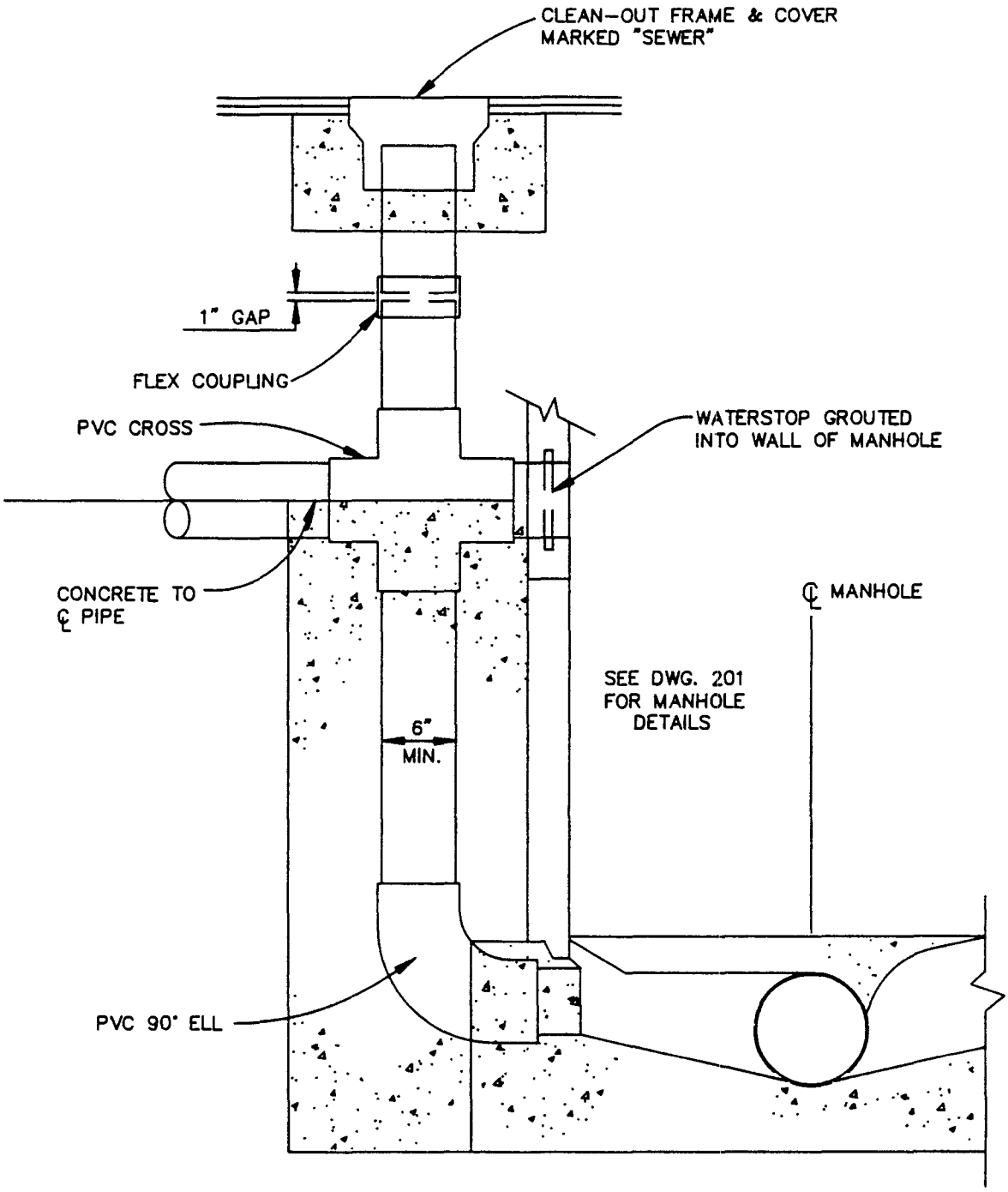

NOTES:

1. PVC PIPE AND FITTINGS TO BE SDR 35 OR SCH 40.
2. FORM SMOOTH CHANNEL TO FLOWLINE.
3. DROP MANHOLE TO BE USED ONLY WITH APPROVAL OF CITY ENGINEER.

SCALE: NONE	**CITY OF ST. HELENA**	DATE: JUNE 1993
DRAWN: CKM	OUTSIDE DROP IN	STD. NO.
CHK: TMS	SANITARY SEWER MANHOLE	204
APPVD: MSO		

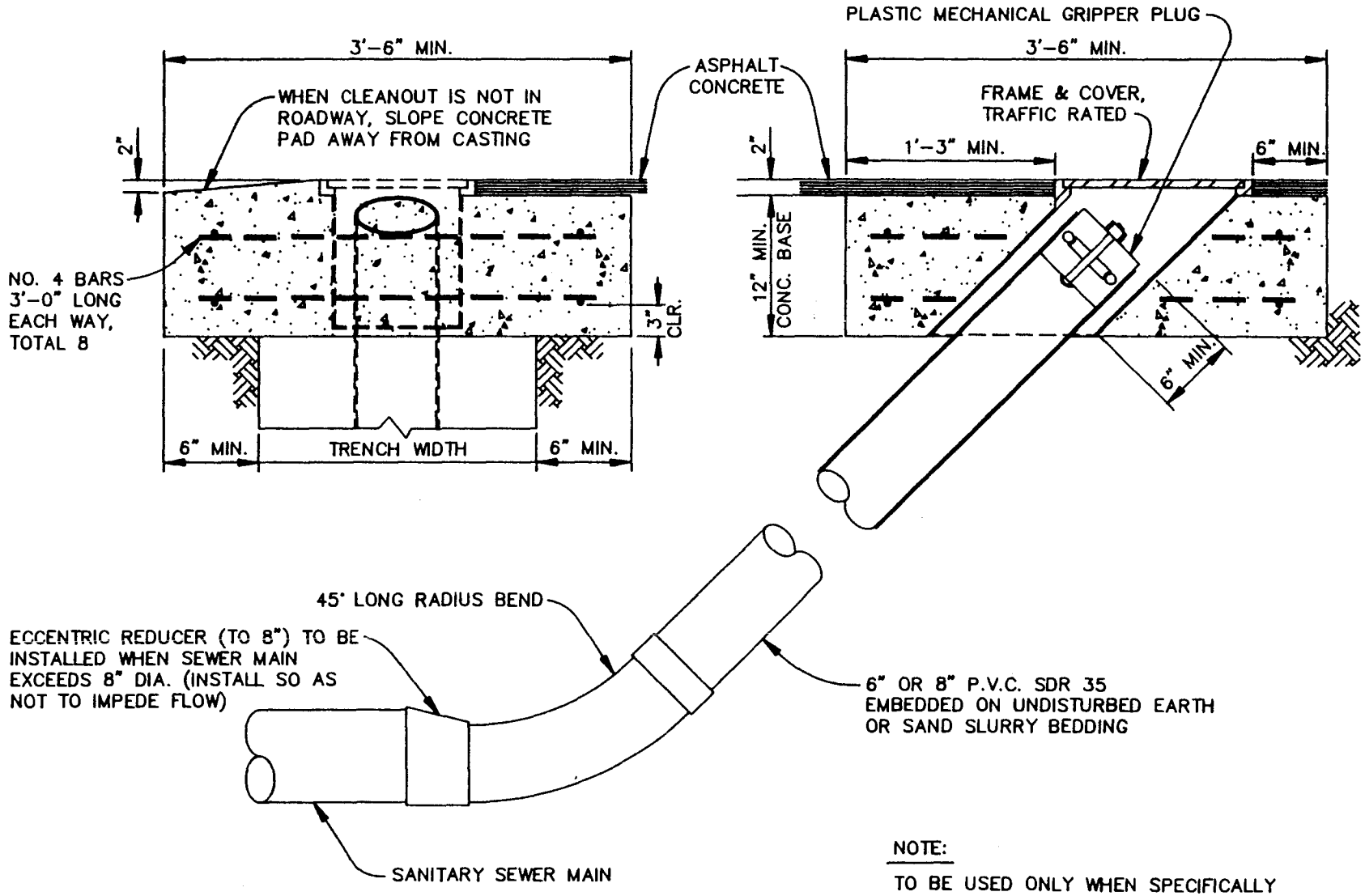

NOTE:

TO BE USED ONLY WHEN SPECIFICALLY AUTHORIZED BY THE CITY ENGINEER

SCALE: NONE

DRAWN: DRH

CHK:

APPVD:

CITY OF ST. HELENA

TEMPORARY MAINLINE CLEANOUT

DATE: JUNE 1993

STD. NO. 205

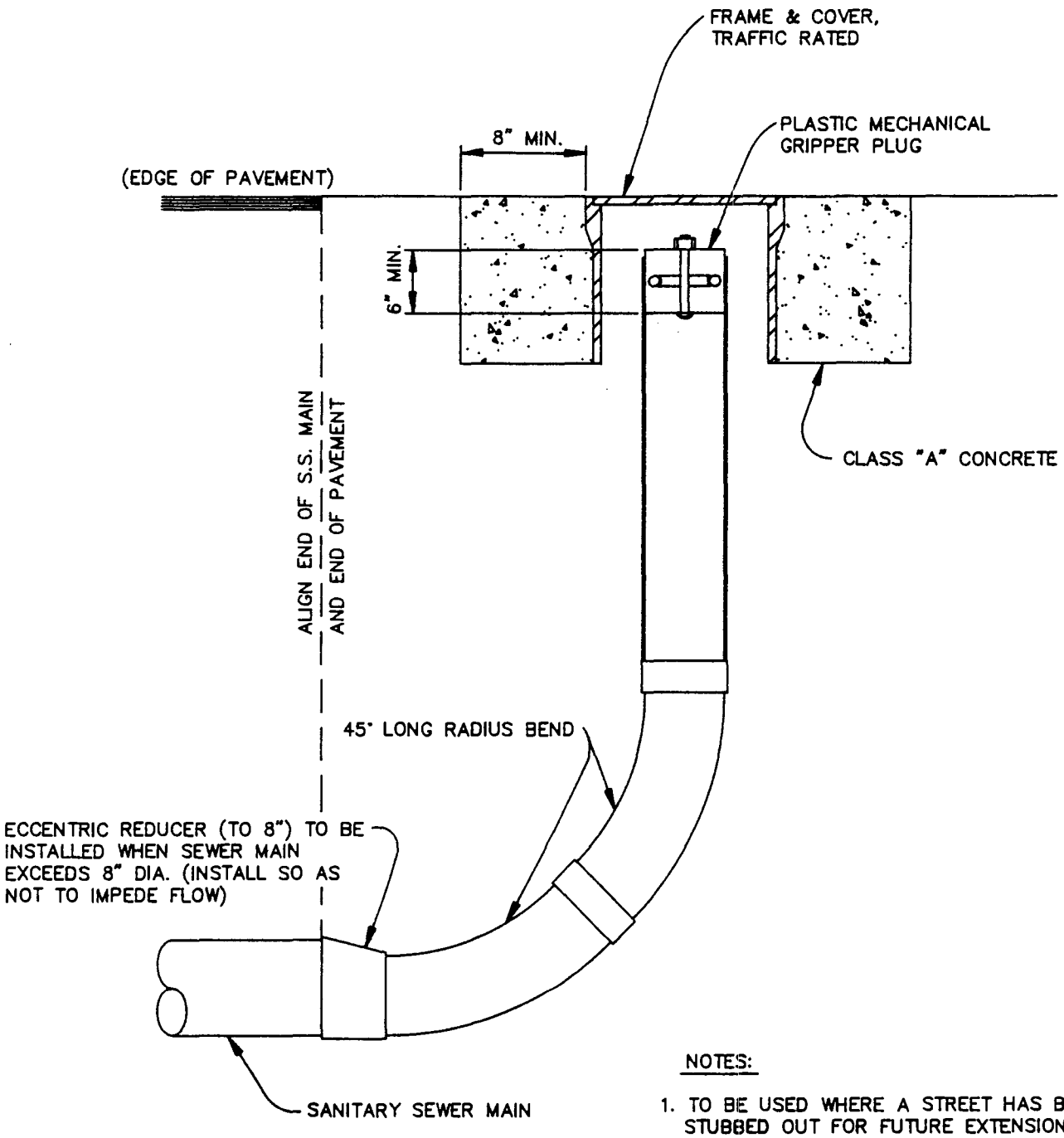

NOTES:

1. TO BE USED WHERE A STREET HAS BEEN STUBBED OUT FOR FUTURE EXTENSION.
2. TO BE USED ONLY WHEN SPECIFICALLY AUTHORIZED BY THE CITY ENGINEER.
3. VALVE BOX LID SHALL BE MARKED "SEWER".
4. EASEMENT ACQUISITION MAY BE REQ'D.

SCALE: NONE	CITY OF ST. HELENA	DATE: JUNE 199[illegible]
DRAWN: DRH	TEMPORARY MAINLINE CLEANOUT	STD. NO.
CHK:		206
APPVD:		

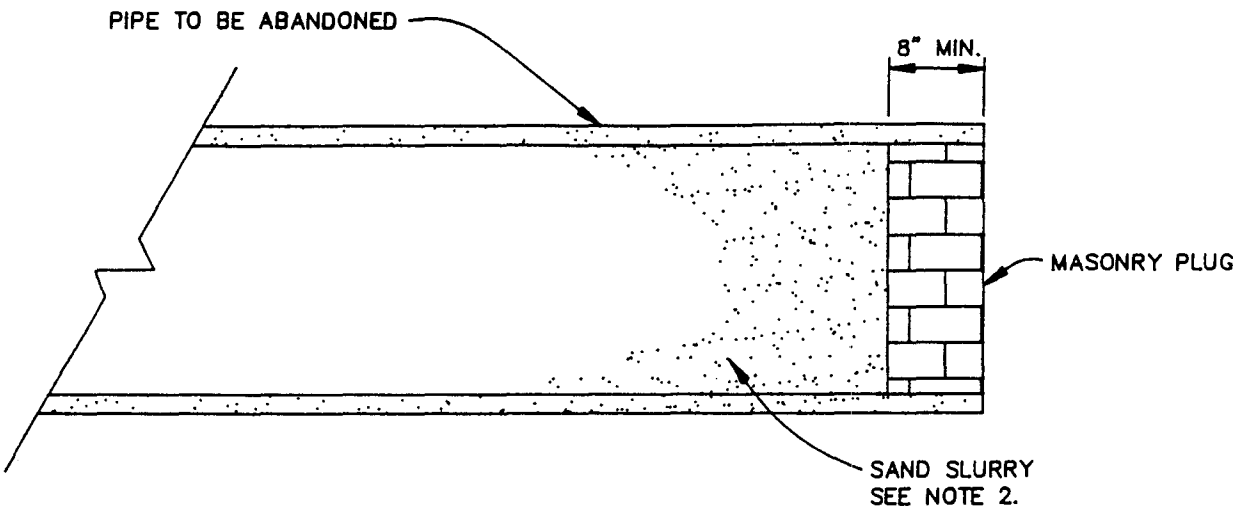

12" DIAMETER PIPE AND LARGER

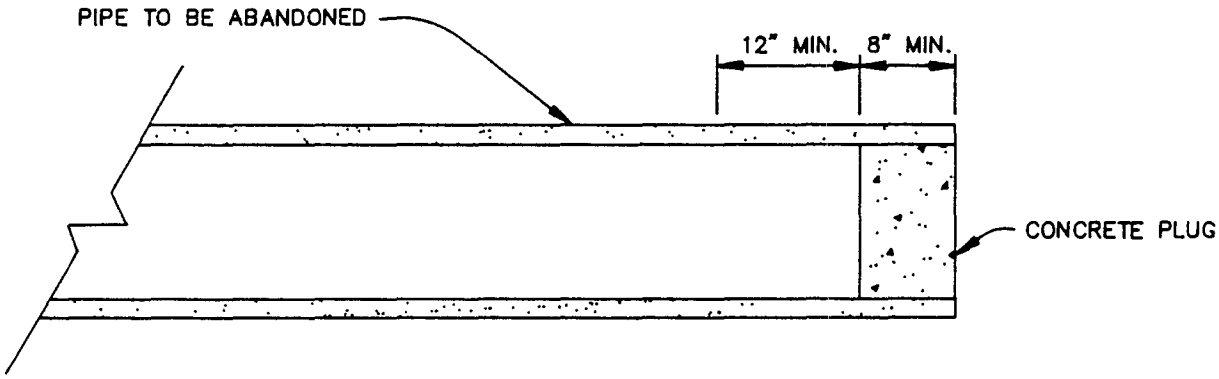

10" DIAMETER PIPE AND SMALLER

NOTES:

1. PIPE PLUGS SHALL BE INSTALLED TO THE SATISFACTION OF THE CITY ENGINEER.
2. ABANDONED PIPES, 12" AND LARGER, SHALL BE BROKEN INTO EVERY 50' AND SHALL BE FILLED COMPLETELY WITH SAND SLURRY OR CONTROL DENSITY FILL MATERIAL.

SCALE: NONE	CITY OF ST. HELENA	DATE: JUNE 1993
DRAWN: DRH	ABANDONED PIPE PLUG DETAIL	STD. NO.
CHK:		207
APPVD:		

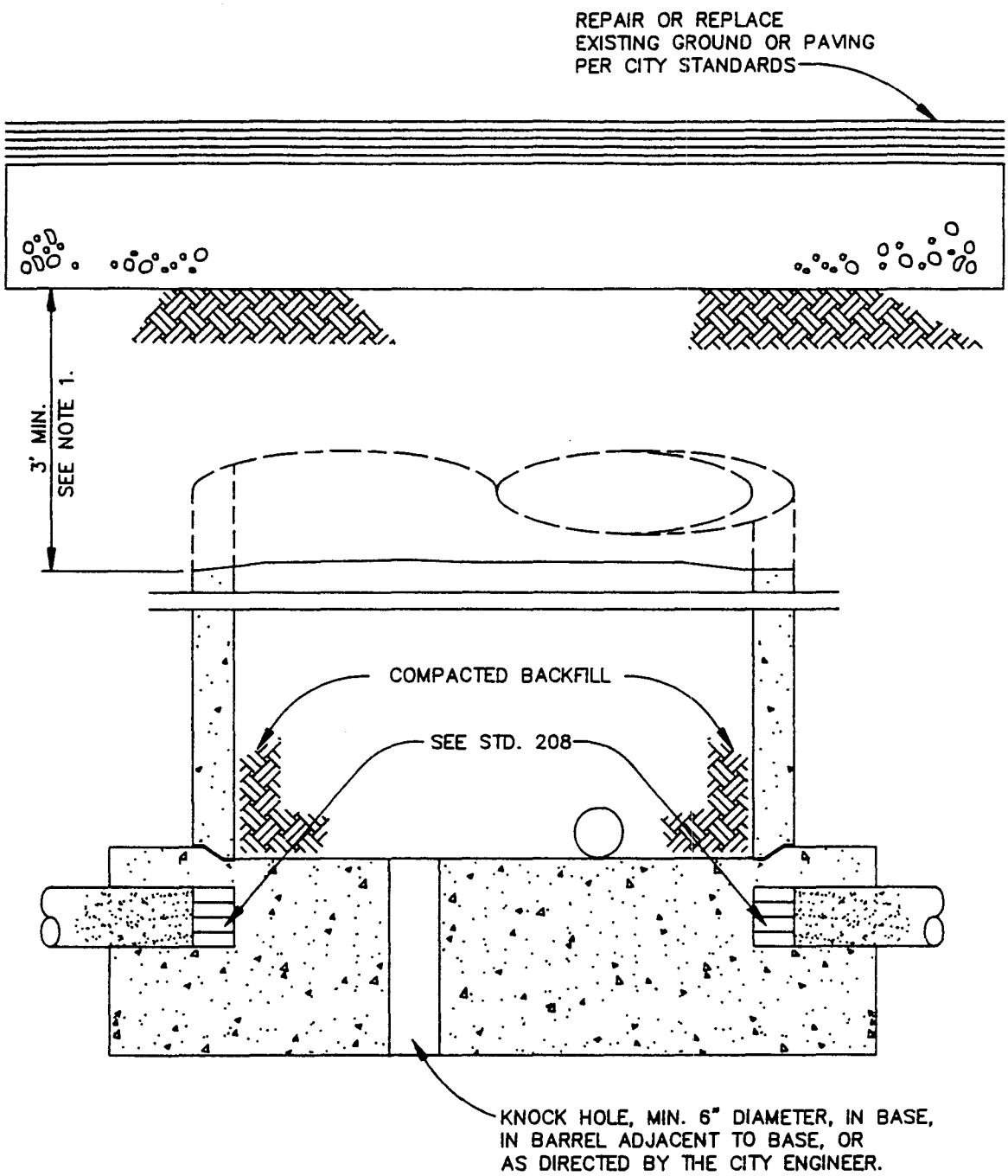

NOTES:

1. REMOVE FRAME, COVER, TAPER AND BARREL SECTIONS.
2. AFTER PLUGGING ALL PIPES IN MANHOLE, THE REMAINING PORTION OF THE BARREL SECTION AND ALL VOIDS CREATED BY THE REMOVAL OF THE UPPER PORTIONS OF THE MANHOLE, SHALL BE BACKFILLED AND COMPACTED TO 90% RELATIVE DENSITY. USE TRENCH BACKFILL OR PIPE BEDDING MATERIAL.

SCALE: NONE	CITY OF ST. HELENA	DATE: JUNE 1993
DRAWN: DRH	ABANDONED MANHOLE DETAIL	STD. NO.
CHK:		208
APPVD:		

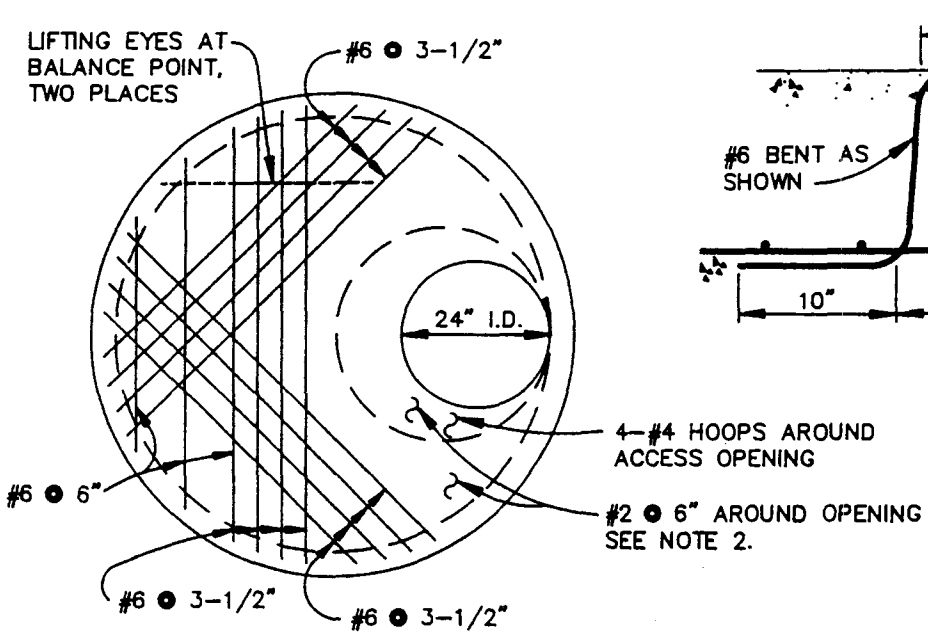

SLAB PLAN

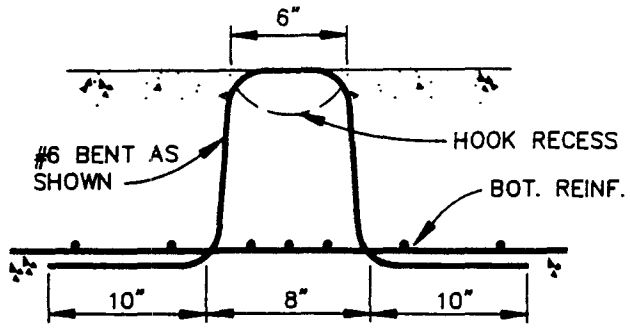

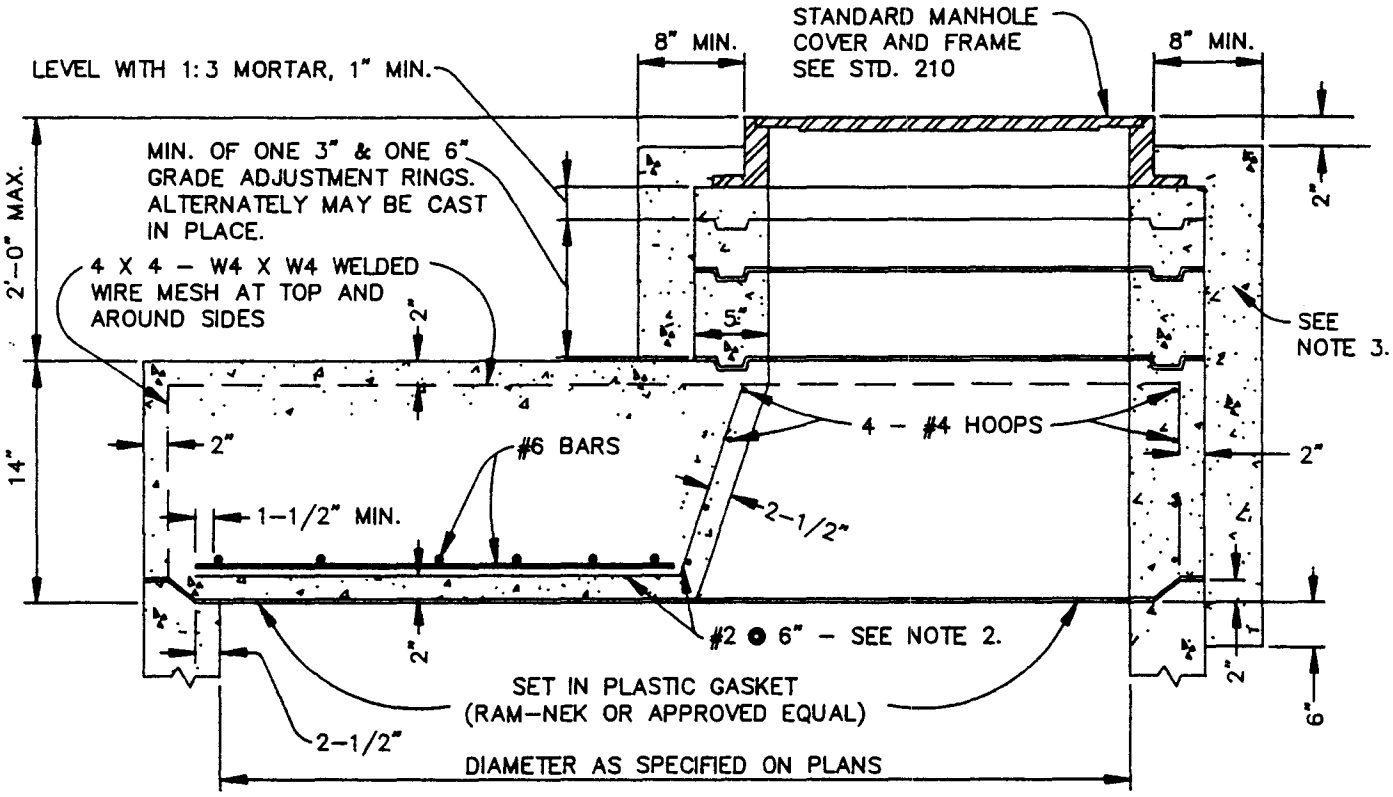

NOTES:

1. FOR DETAILS AND SPECIFICATIONS OF BASE AND BARREL SECTIONS, SEE CITY STDS. 201 OR 202.
2. #2 BARS BENTS UP AND SPACED 6" O.C. AROUND 24" OPENING. HORIZONTAL LEGS TO FAN OUT EQUALLY SPACED, TO 2-1/2" CLEAR AT EDGE OF SLAB.
3. CLASS "A" CONCRETE COLLAR.

SCALE: NONE	**CITY OF ST. HELENA**	DATE: JUNE 1993
DRAWN: DRH	STANDARD PRECAST CONCRETE MANHOLE REDUCER SLAB SANITARY SEWER	STD. NO.
CHK:		209
APPVD:		

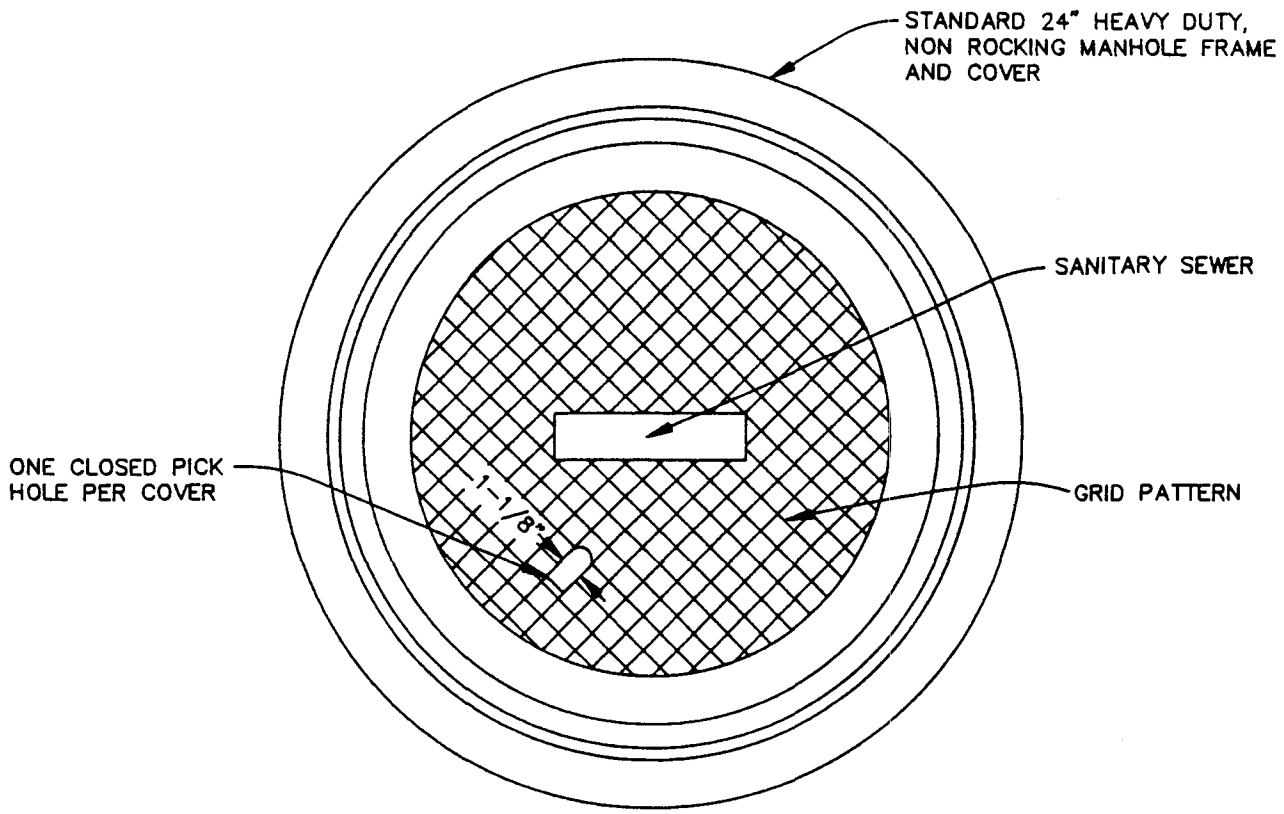

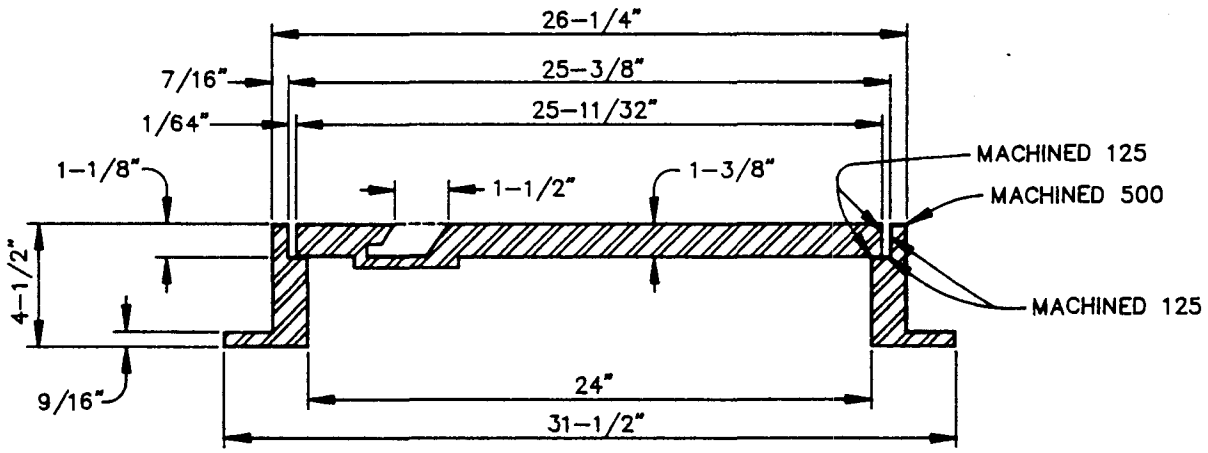

NOTES:

1. SPECIFICY SANITARY SEWER WHEN ORDERING. ALL CASTINGS SHALL BE DIPPED IN APPROVED ASPHALT PAINT.
2. ALL MATERIAL USED IN MANUFACTURING SHALL CONFORM TO A.S.T.M. DESIGNATION A-159-G3000, OR OF UNITED STATES GOVERNMENT SPECIFICATIONS QQI-652B.
3. MINIMUM WEIGHT COMPONENTS: COVER - 130 POUNDS; FRAME - 135 POUNDS.

SCALE: NONE	CITY OF ST. HELENA	DATE: JUNE 1993
DRAWN: DRH	STANDARD MANHOLE FRAME AND COVER	STD. NO.
CHK:		210
APPVD:		

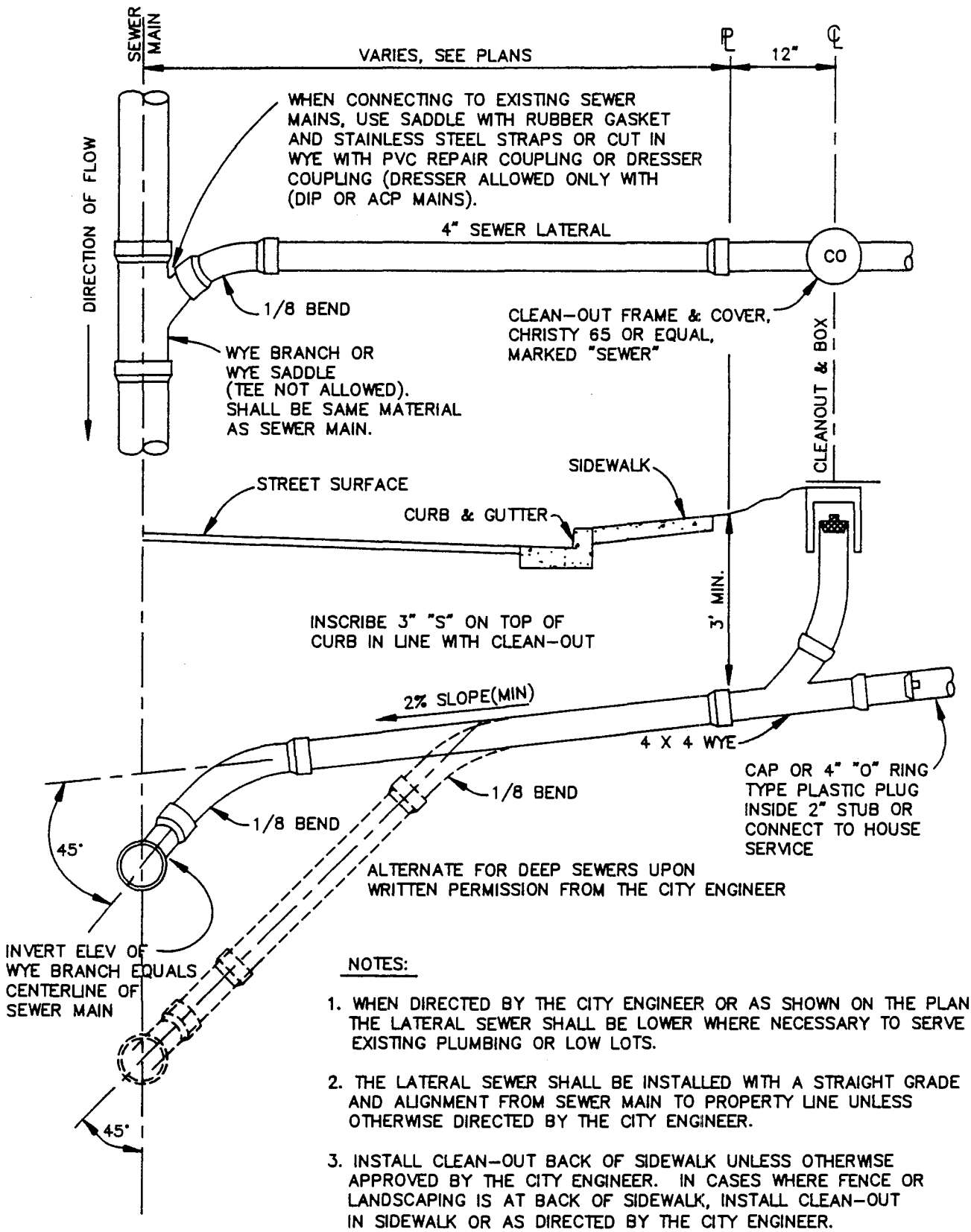

NOTES:

1. WHEN DIRECTED BY THE CITY ENGINEER OR AS SHOWN ON THE PLANS, THE LATERAL SEWER SHALL BE LOWER WHERE NECESSARY TO SERVE EXISTING PLUMBING OR LOW LOTS.
2. THE LATERAL SEWER SHALL BE INSTALLED WITH A STRAIGHT GRADE AND ALIGNMENT FROM SEWER MAIN TO PROPERTY LINE UNLESS OTHERWISE DIRECTED BY THE CITY ENGINEER.
3. INSTALL CLEAN-OUT BACK OF SIDEWALK UNLESS OTHERWISE APPROVED BY THE CITY ENGINEER. IN CASES WHERE FENCE OR LANDSCAPING IS AT BACK OF SIDEWALK, INSTALL CLEAN-OUT IN SIDEWALK OR AS DIRECTED BY THE CITY ENGINEER.

SCALE: NONE	CITY OF ST. HELENA	DATE: JUNE 1993
DRAWN: DRH	SEWER SERVICE LATERAL	STD. NO.
CHK:		211
APPVD:		

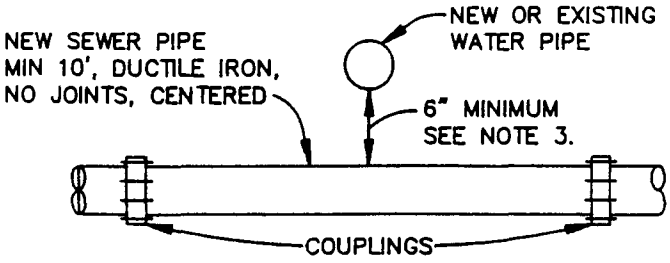

NEW SEWER UNDER
NEW OR EXISTING WATER

CASE 1

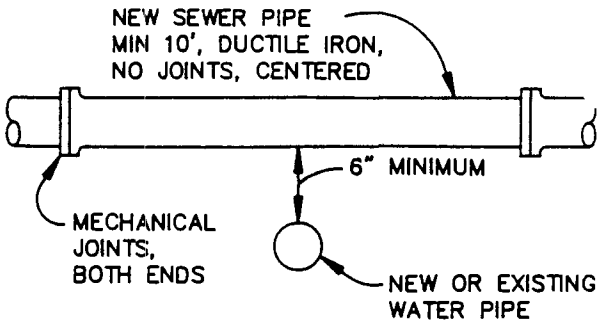

NEW SEWER OVER
NEW OR EXISTING WATER

CASE 2

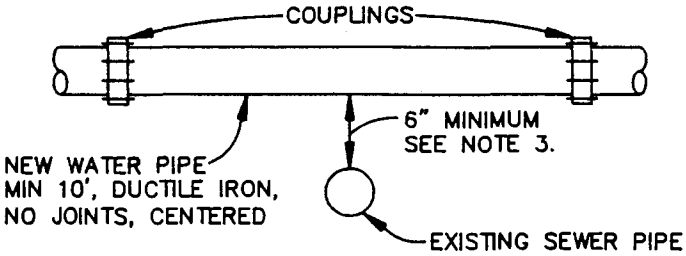

NEW WATER OVER
EXISTING SEWER

CASE 3

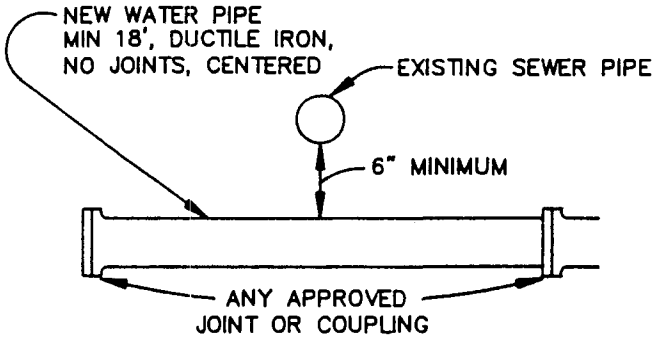

NEW WATER UNDER
EXISTING SEWER

CASE 4

NOTES:

1. THIS STANDARD APPLIES TO PIPES UP TO AND INCLUDING 18" DIAMETER. ALL CROSSINGS OF LARGER DIAMETER SHALL BE AS APPROVED BY THE CITY ENGINEER.
2. ALL NEW DUCTILE IRON SHALL BE WRAPPED IN POLYETHYLENE PER GENERAL SPECIFICATIONS.
3. WHERE SEWER CROSSES BELOW A WATER MAIN, WITH 1' OR MORE VERTICAL CLEARANCE, NO SPECIAL INSTALLATION IS REQUIRED.
4. "NEW PIPE UNDER EXISTING – CASE 5" SHALL BE USED WHEN THE EXISTING PIPE HAS A JOINT OVER OR WITHIN 2' OF NEW TRENCH.
5. ANY PIPE–PIPE CROSSING WITH LESS THAN 6" VERTICAL CLEARANCE SHALL NOT BE INSTALLED WITHOUT APPROVAL OF THE CITY ENGINEER.
6. FOR WATER MAIN LOWERING DETAIL, SEE CITY STANDARD 117.
7. SEE GENERAL SPECIFICATIONS LIST FOR APPROVED COUPLINGS.

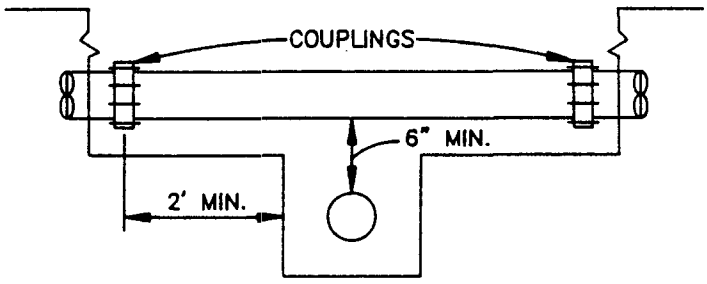

NEW PIPE UNDER EXISTING

CASE 5 – SEE NOTE 4.

SCALE: NONE	CITY OF ST. HELENA	DATE: JUNE 1995
DRAWN: DRH	SEWER SERVICE LATERAL	STD. NO.
CHK:		212
APPVD:		

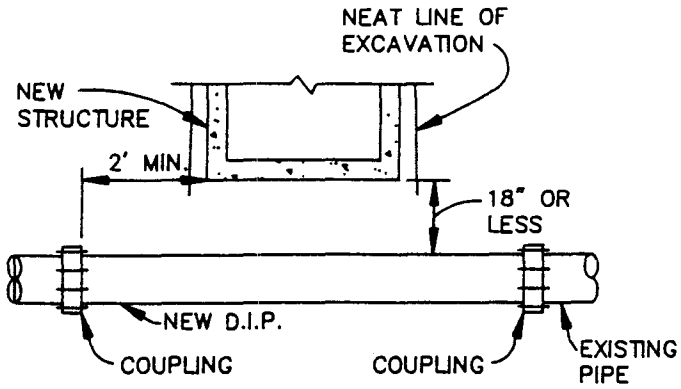

NEW PIPE–STRUCTURE OVER EXISTING

TYPE B

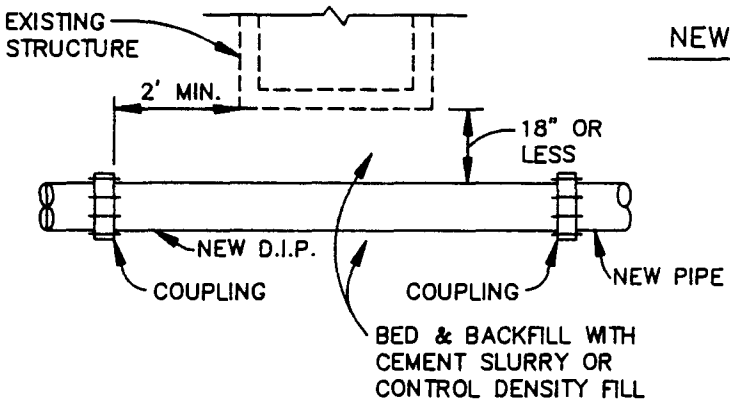

NEW PIPE UNDER EXISTING

TYPE A

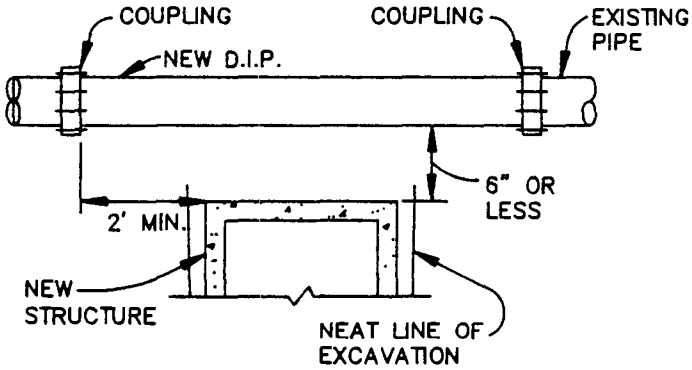

NEW PIPE–STRUCTURE UNDER EXISTING

TYPE C

NOTES:

1. THIS STANDARD APPLIES TO PIPES UP TO AND INCLUDING 18" DIAMETER. ALL CROSSINGS OF LARGER DIAMETER SHALL BE AS APPROVED BY THE CITY ENGINEER.
2. WHEN PIPES CROSS WITHIN THE DIMENSIONS SHOWN, A NEW DUCTILE IRON PIPE SECTION SHALL BE INSTALLED AS DETAILED.
3. ALL DUCTILE IRON PIPE SHALL BE ENCASED IN POLYETHYLENE FILM IN THE TUBE FORM.
4. ANY TYPE "A" INSTALLATION REQUIRING MORE THAN ONE LENGTH OF PIPE SHALL BE ENCASED PER CITY STANDARD 123.
5. SEE GENERAL SPECIFICATIONS APPROVED LIST FOR APPROVED COUPLINGS.

SCALE: NONE	CITY OF ST. HELENA	DATE: JUNE 1993
DRAWN: DRH	PIPE–STRUCTURE CROSSING DETAIL	STD. NO.
CHK:		213
APPVD:		

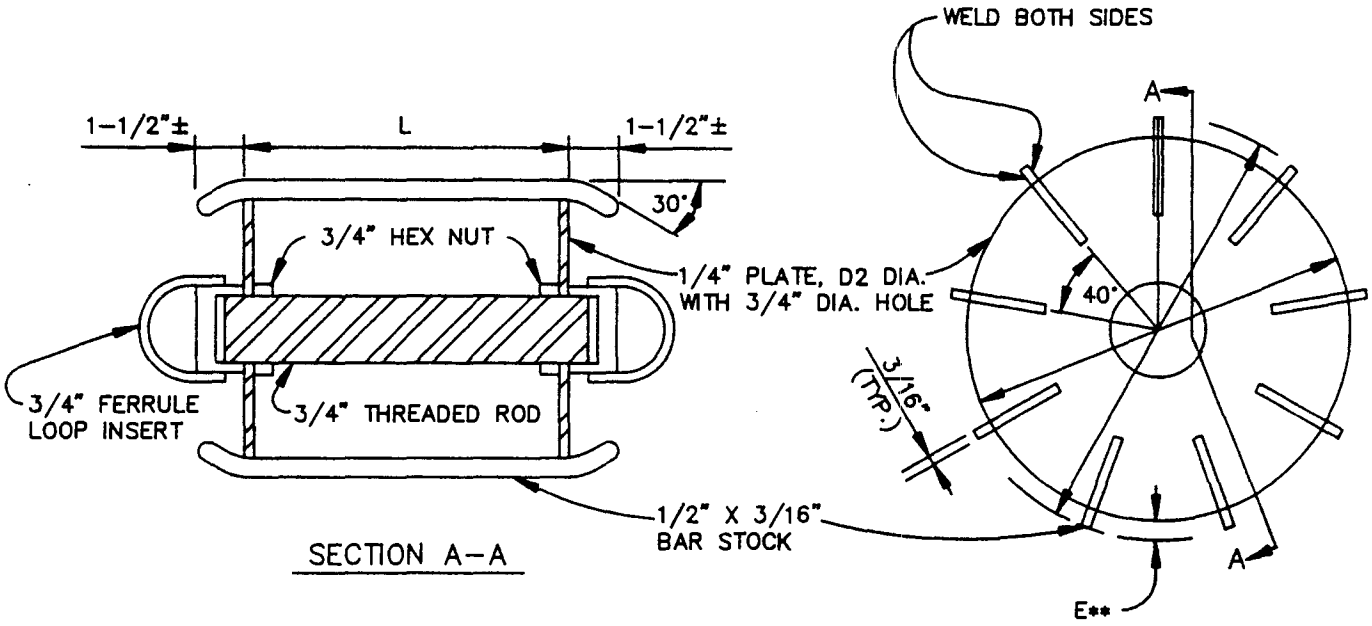

		5% DEFLECTION	
		BAS ASTM D 2751 PVC ASTM D 3034	
		SDR35	
NOM. DIA.	L	D1**	D2***
6"	6"	5.629	4.629
8"	8"	7.537	6.537
10"	10"	9.421	8.421
12"	12"	11.210	10.210
15"	15"	13.729	12.729

** 1. MANDREL DIA. HAS BEEN CALCULATED TO CORRECT CHORD LENGTH ERROR "E".

*** 2. MINIMUM PLATE DIAMETER.

3. A PROVING RING OF THE SPECIFIED DIAMETER (D1) SHALL BE SUPPLIED WITH EACH DEFLECTION MANDREL.

NOTES:

1. MARK ALL MANDRELS WITH ASTM SPECIFICATION NUMBER, SDR NUMBER, AND DEFLECTION.

2. THE 1/2" BAR STOCK ON EDGE PROVIDES CLEARANCE TO PASS SMALL AMOUNTS OF SOIL WHICH MAY BE IN PIPE.

SCALE: NONE	CITY OF ST. HELENA	DATE: JUNE 1993
DRAWN: DRH	PLASTIC SEWER PIPE DEFLECTION MANDREL	STD. NO.
CHK:		214
APPVD:		

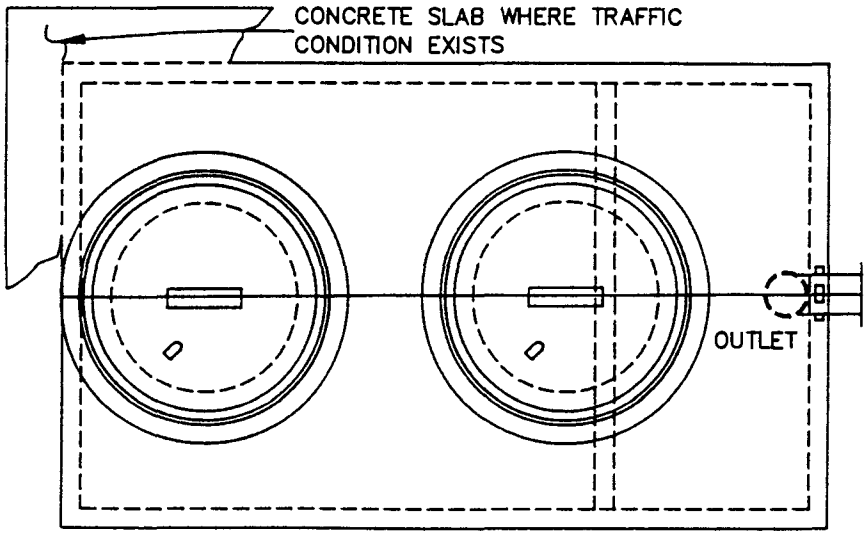

PLAN

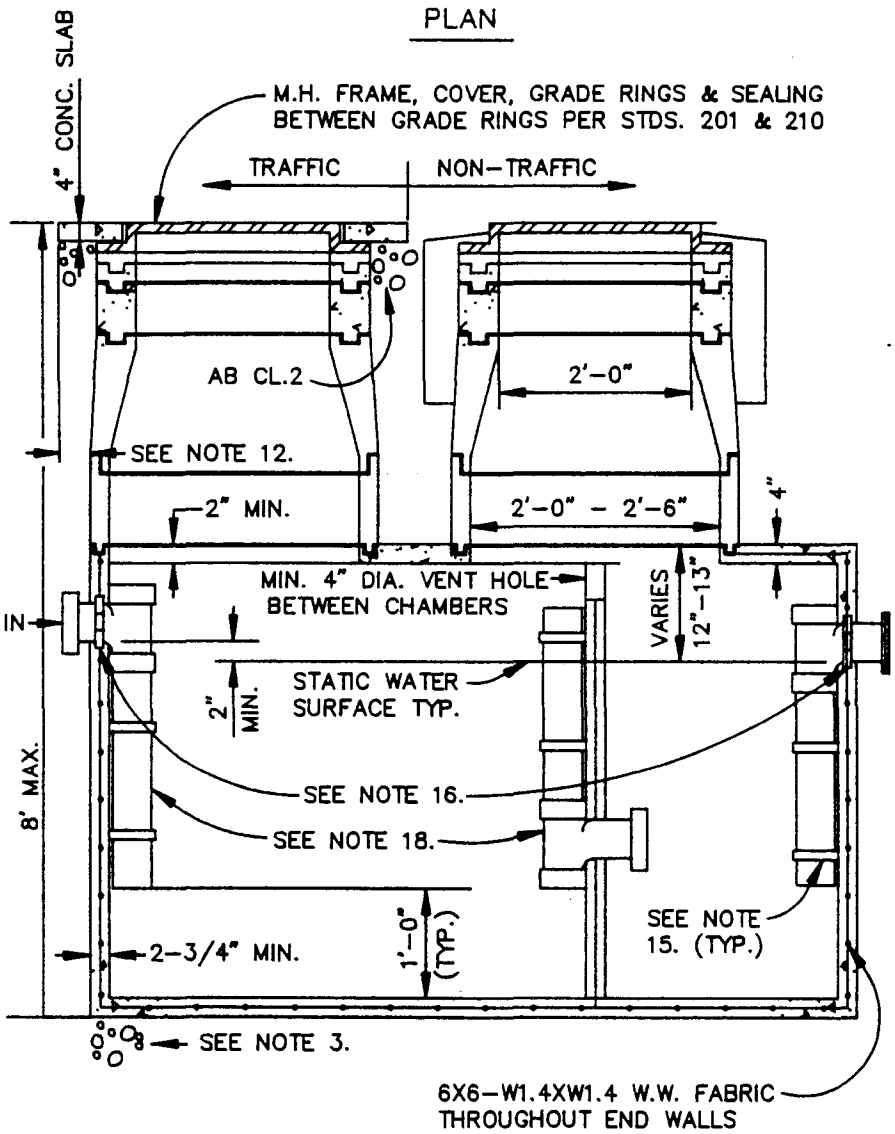

SECTION

NOTES:

1. TANK TO BE PRECAST AS MANUFACTURED BY:
   M.C. NOTTINGHAM
   PACIFIC CONCRETE PRODUCTS
   SELVAGE CONCRETE PRODUCTS
   OR CITY APPROVED EQUAL.
2. POLYETHYLENE TANKS ACCEPTABLE IN NON-TRAFFIC AREAS UPON SPECIFIC APPROVAL OF THE CITY ENGINEER.
3. 3" MIN. BEDDING MATERIAL PER CITY STANDARDS.
4. ALL SURFACE WATER MUST DRAIN AWAY FROM MANHOLES.
5. PIPE SHALL BE 6" MAX. DIAMETER PER U.P.C.
6. CONCRETE MIN. COMPRESSIVE STRENGTH OF 3000 PSI AT 28 DAYS.
7. ALL WYES SHALL BE ONE-WAY CLEANOUT WYES EXCEPT AS NOTED PER U.P.C.
8. GREASE INTERCEPTORS SHALL BE LOCATED OUTSIDE OF BUILDINGS IN A LOCATION ACCESSIBLE TO WASTE HAULER PUMPER.
9. ALL GREASE INTERCEPTORS SHALL BE LOCATED OUTSIDE PUBLIC RIGHT OF WAY.
10. EXCAVATIONS SHALL BE NEAT LINE TYPICALLY ALL SIDES.
11. INTERCEPTOR TO BE USED IN CONJUNCTION WITH "SAMPLING MANHOLE" PER STD. 217.
12. SLAB TO EXTEND MIN. 24" BEYOND ALL SIDES OF TANK (TRAFFIC AREA).
13. ALL WASTE MUST ENTER THROUGH INLET FITTING ONLY.
14. TANK TO BE STENCILED ON UPPER LEFT HAND CORNER OF INLET END IN WHITE.
15. STAINLESS STEEL CLAMP & BOLTS 3'-0" O.C. MAX. (TYP.) MINIMUM 2 REQUIRED.
16. A WATERSTOP CONSISTING OF A STANDARD MANHOLE ADAPTER GASKET AS SUPPLIED BY THE PIPE MANUFACTURER SHALL BE GROUTED INTO THE INTERCEPTOR WALL NEAR THE CENTER OF THE WALL.
17. TANK CAPACITY TO BE DETERMINED AT THE TIME OF INDUSTRIAL WASTE PERMIT APPLICATION.
18. PIPE & FITTINGS TO BE 4" SCH. 40 PVC.
19. REINFORCING BARS INTERMEDIATE GRADE ASTM A615-62T AND A305-56T. REINFORCING WIRE FABRIC - ASTM A185-61T.
20. ALTERNATE DESIGN BY A REGISTERED ENGINEER MAY BE SUBSTITUTED FOR REVIEW BY CITY ENGINEER.

SCALE: NONE	CITY OF ST. HELENA	DATE: JUNE 1993
DRAWN: DRH	PRECAST GREASE INTERCEPTOR	STD. NO.
CHK:		215
APPVD:		

NOTE: TANK TO BE STENCILED ON UPPER LEFT-HAND CORNER OF INLET END IN WHITE.

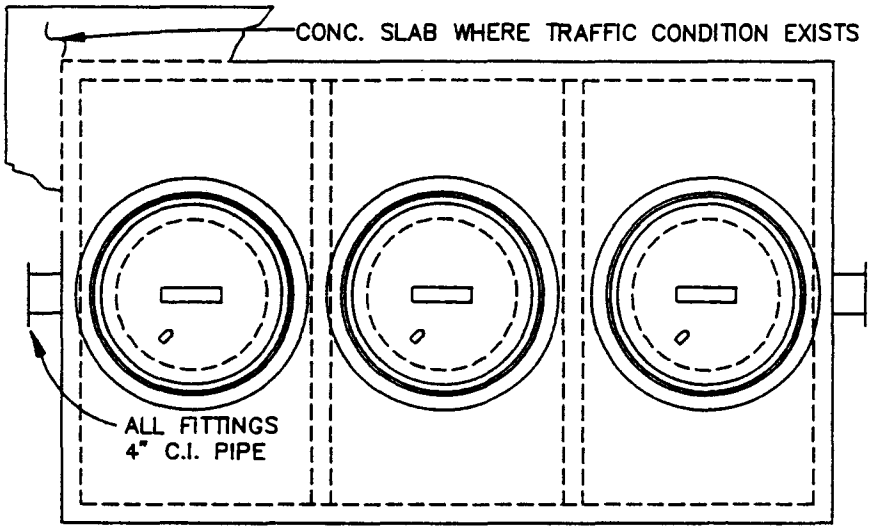

PLAN

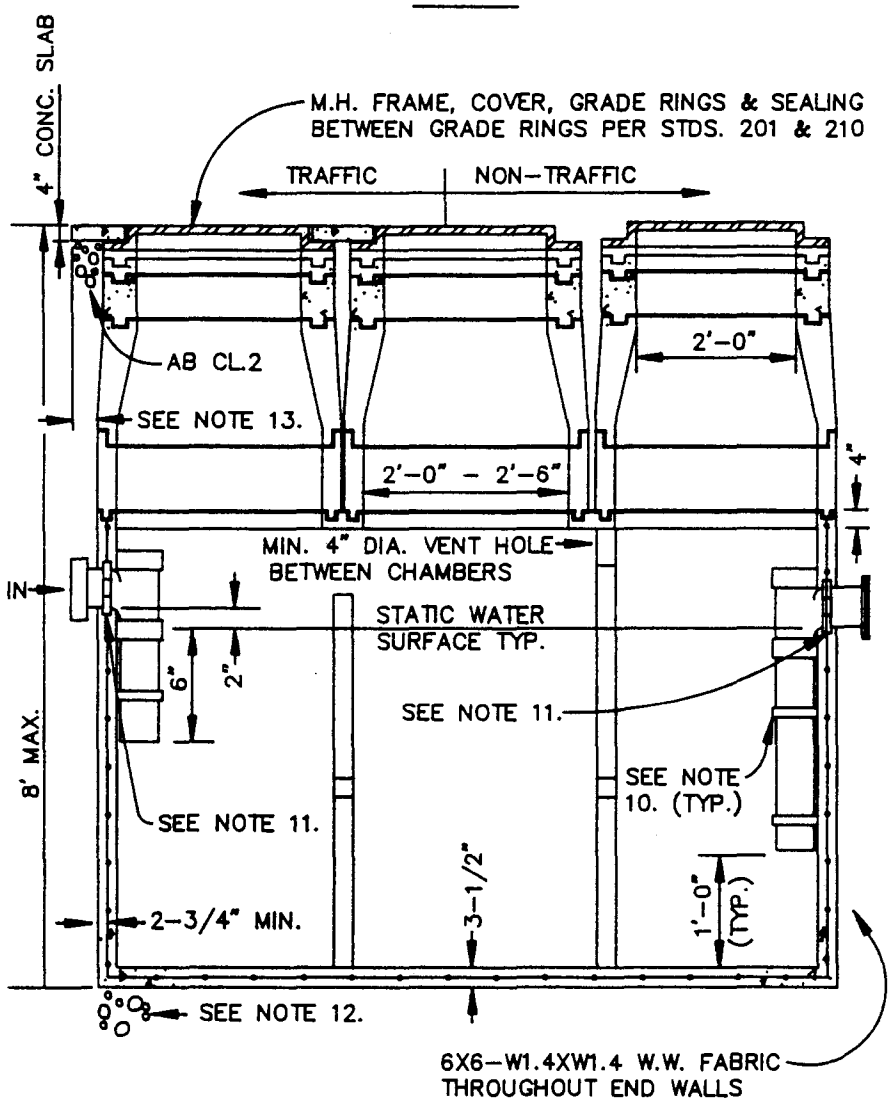

SECTION

NOTES:

1. TANK TO BE PRECAST AS MANUFACTURED BY:
   M.C. NOTTINGHAM
   PACIFIC CONCRETE PRODUCTS
   SELVAGE CONCRETE PRODUCTS
   OR CITY APPROVED EQUAL.
2. ALL GREASE INTERCEPTORS SHALL BE LOCATED OUTSIDE PUBLIC RIGHT OF WAY.
3. GREASE INTERCEPTORS SHALL BE LOCATED OUTSIDE OF BUILDINGS IN A LOCATION ACCESSIBLE TO WASTE HAULER PUMPER.
4. ALTERNATE DESIGN BY A REGISTERED ENGINEER MAY BE SUBSTITUTED FOR REVIEW BY CITY ENGINEER.
5. PIPE SHALL BE 6" MAX. DIAMETER PER U.P.C.
6. EXCAVATIONS SHALL BE NEAT LINE TYPICALLY ALL SIDES.
7. HEIGHT OF TANK ABOVE FITTINGS VARIABLE. ONE FOOT SECTIONS MAY BE ADDED TO REQUIRED F.G.
8. ALL WYES SHALL BE ONE-WAY CLEANOUT WYES EXCEPT AS NOTED PER U.P.C.
9. INTERCEPTOR TO BE USED IN CONJUNCTION WITH "SAMPLING MANHOLE" PER STD. 217.
10. STAINLESS STEEL CLAMP & BOLTS 3'-0" O.C. MAX. (TYP.) MINIMUM 2 REQUIRED.
11. A WATERSTOP CONSISTING OF A STANDARD MANHOLE ADAPTER GASKET AS SUPPLIED BY THE PIPE MANUFACTURER SHALL BE GROUTED INTO THE INTERCEPTOR WALL NEAR THE CENTER OF THE WALL.
12. 3" MIN. BEDDING MATERIAL PER CITY STANDARDS.
13. SLAB TO EXTEND MIN. 24" BEYOND ALL SIDES OF TANK (TRAFFIC AREA).
14. TANK CAPACITY TO BE DETERMINED AT THE TIME OF INDUSTRIAL WASTE PERMIT APPLICATION.
15. PIPE & FITTINGS TO BE 4" SCH. 40 PVC.
16. CONCRETE MIN. COMPRESSIVE STRENGTH OF 3000 PSI AT 28 DAYS.
17. ALL WASTE MUST ENTER THROUGH INLET FITTING ONLY.
18. REINFORCING BARS INTERMEDIATE GRADE ASTM A615-62T AND A305-56T. REINFORCING WIRE FABRIC - ASTM A185-61T.
19. REINFORCING WIRE FABRIC - ASTM A185-61T.

SCALE: NONE	CITY OF ST. HELENA	DATE: JUNE 19[illegible]
DRAWN: DRH	SAND AND GREASE INTERCEPTOR	STD. NO.
CHK:		216
APPVD:		

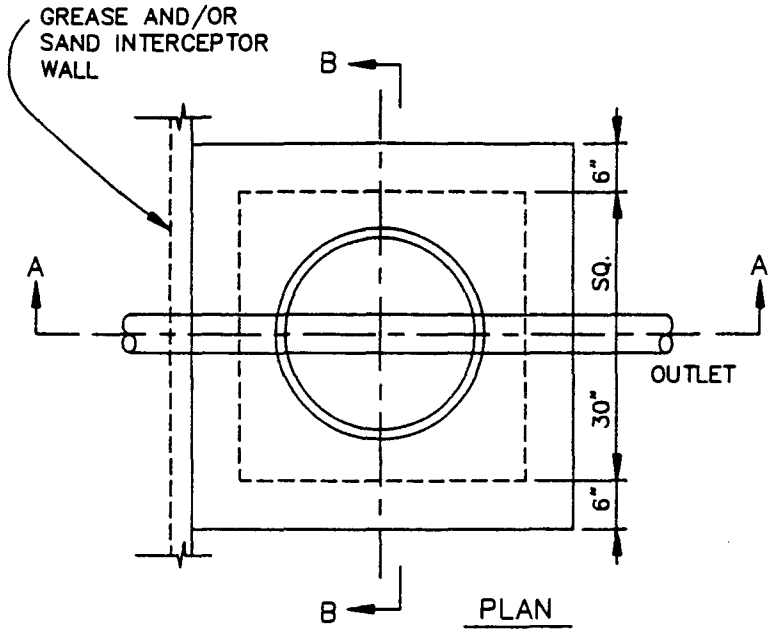

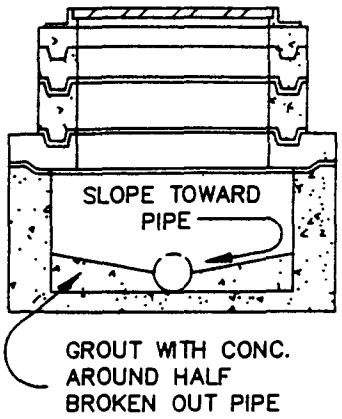

SECTION B–B

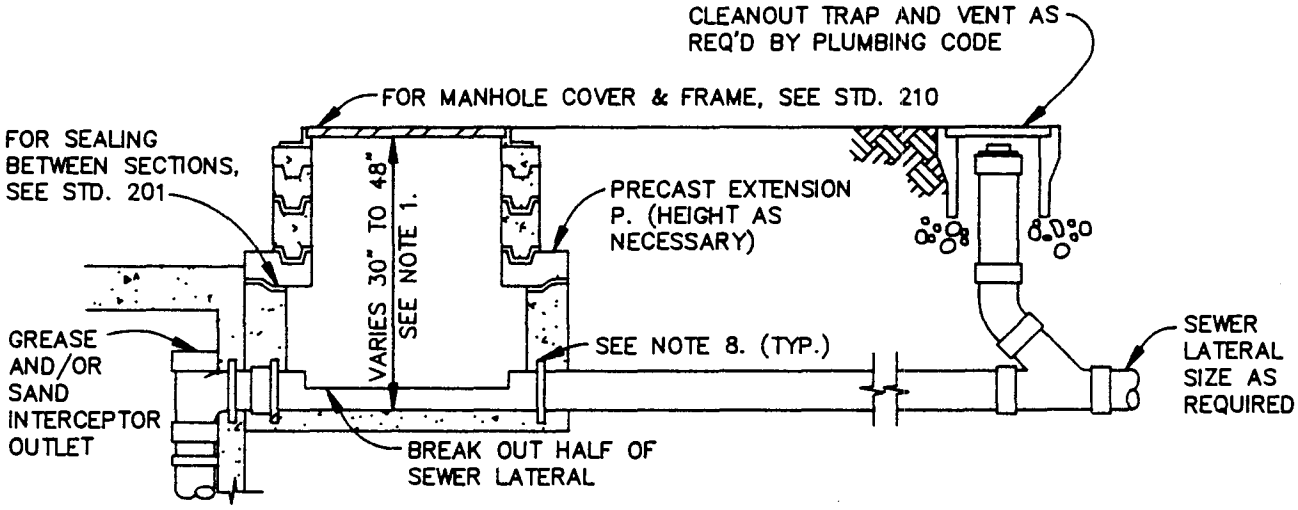

SECTION A–A

NOTES:

1. IF LESS THAN 30" DEEP, REVIEW WITH CITY ENGINEER FOR ADDITIONAL VAULT REQUIREMENTS. IF GREATER THAN 48", INSTALL SAMPLING MANHOLE SIMILAR TO STANDARD 201 WITH FLOW–THROUGH CUT–AWAY PIPE AS PER THIS STANDARD.
2. SAMPLING MANHOLE TO BE LOCATED OUTSIDE OF PUBLIC RIGHT OF WAY EXCEPT WITH WRITTEN APPROVAL OF THE CITY ENGINEER.
3. AN ALTERNATE DESIGN BY A REGISTERED ENGINEER MAY BE SUBMITTED FOR REVIEW BY THE CITY ENGINEER.
4. LOCATION SUBJECT TO THE APPROVAL OF THE CITY ENGINEER.
5. MANHOLE SHALL BE SANTA ROSA CAST PRODUCTS PRECAST CONCRETE DROP INLET BOX #5K WITH #5K X 24" DIAMETER TRANSITION SLAB.
6. ALL SURFACE WATER MUST DRAIN AWAY FROM SAMPLING MANHOLE.
7. SAMPLING MANHOLE TO BE USED IN CONJUNCTION WITH EITHER STANDARDS 215 OR 216.
8. A WATERSTOP CONSISTING OF A STANDARD MANHOLE ADAPTER GASKET AS SUPPLIED BY THE PIPE MANUFACTURER TO BE GROUTED INTO THE BOX WALL NEAR THE CENTER OF THE WALL.

SCALE: NONE	CITY OF ST. HELENA	DATE: JUNE 1993
DRAWN: DRH	SAMPLING MANHOLE EXTERIOR USE	STD. NO.
CHK:		217
APPVD:		

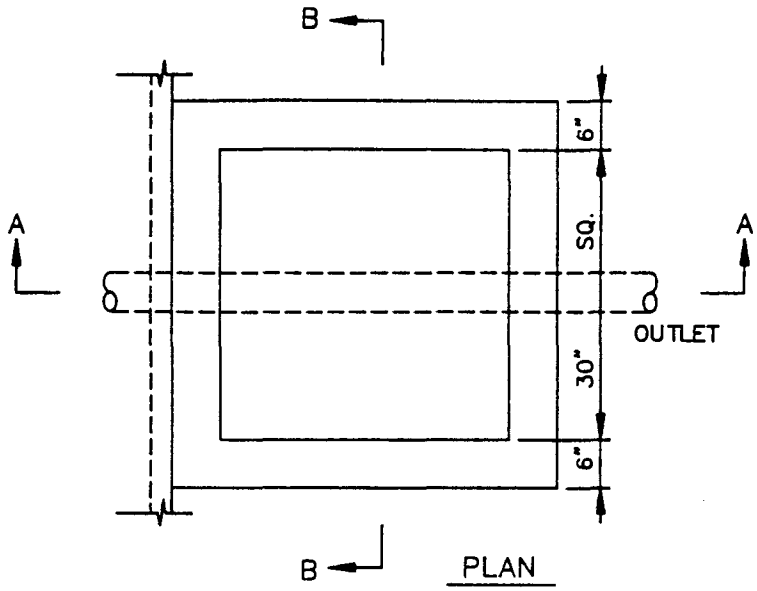

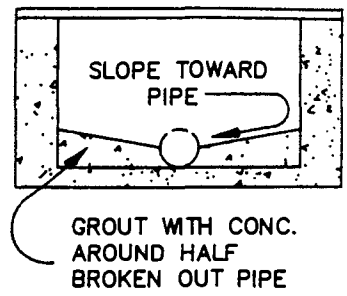

SECTION B–B

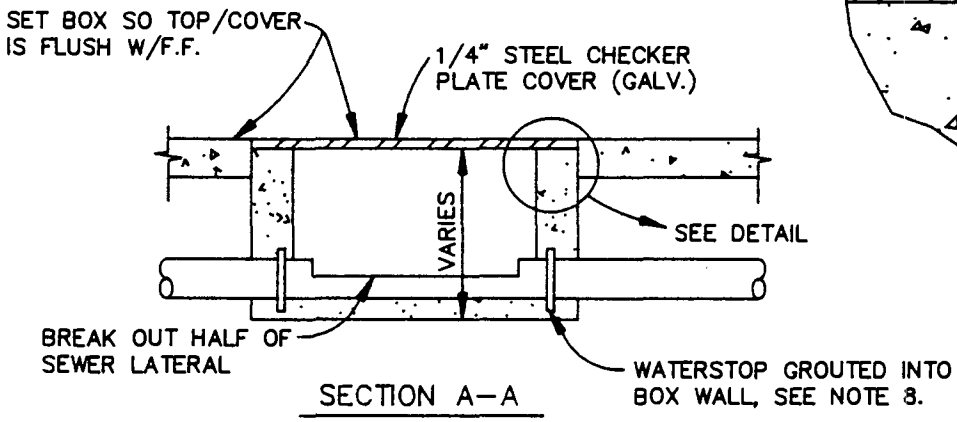

SECTION A–A

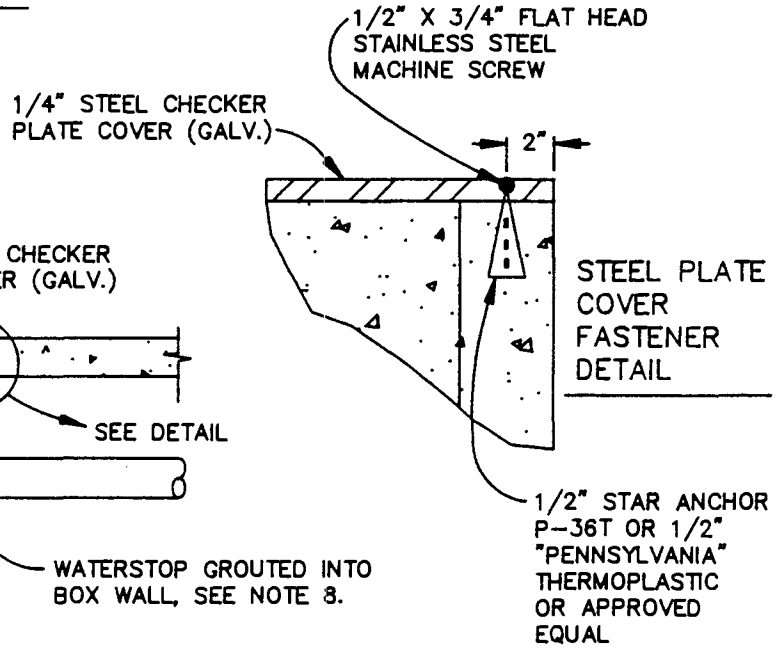

STEEL PLATE COVER FASTENER DETAIL

NOTES:

1. TO BE USED IN THE INTERIOR OF BUILDINGS IN CONJUNCTION W/SAMPLING MANHOLE AND TO BE UPSTREAM OF THE SAMPLING MANHOLE.
2. LOCATION SUBJECT TO THE APPROVAL OF THE CITY ENGINEER.
3. TO BE USED ONLY WITH THE APPROVAL OF THE CITY ENGINEER.
4. AN ALTERNATE DESIGN BY A REGISTERED ENGINEER MAY BE SUBMITTED FOR REVIEW BY THE CITY ENGINEER.
5. BOX SHALL BE SANTA ROSA CAST PRODUCTS MODEL 5K OR APPROVED EQUAL.
6. ALL SURFACE WATER MUST DRAIN AWAY FROM SAMPLING BOX.
7. SAMPLING BOX TO BE USED IN CONJUNCTION WITH EITHER STANDARDS 215 OR 216.
8. A WATERSTOP CONSISTING OF A STANDARD MANHOLE ADAPTER GASKET AS SUPPLIED BY THE PIPE MANUFACTURER TO BE GROUTED INTO THE BOX WALL NEAR THE CENTER OF THE WALL.

SCALE: NONE	CITY OF ST. HELENA	DATE: JUNE 1995
DRAWN: DRH	SAMPLING BOX BUILDING INTERIOR	STD. NO.
CHK:		218
APPVD:		

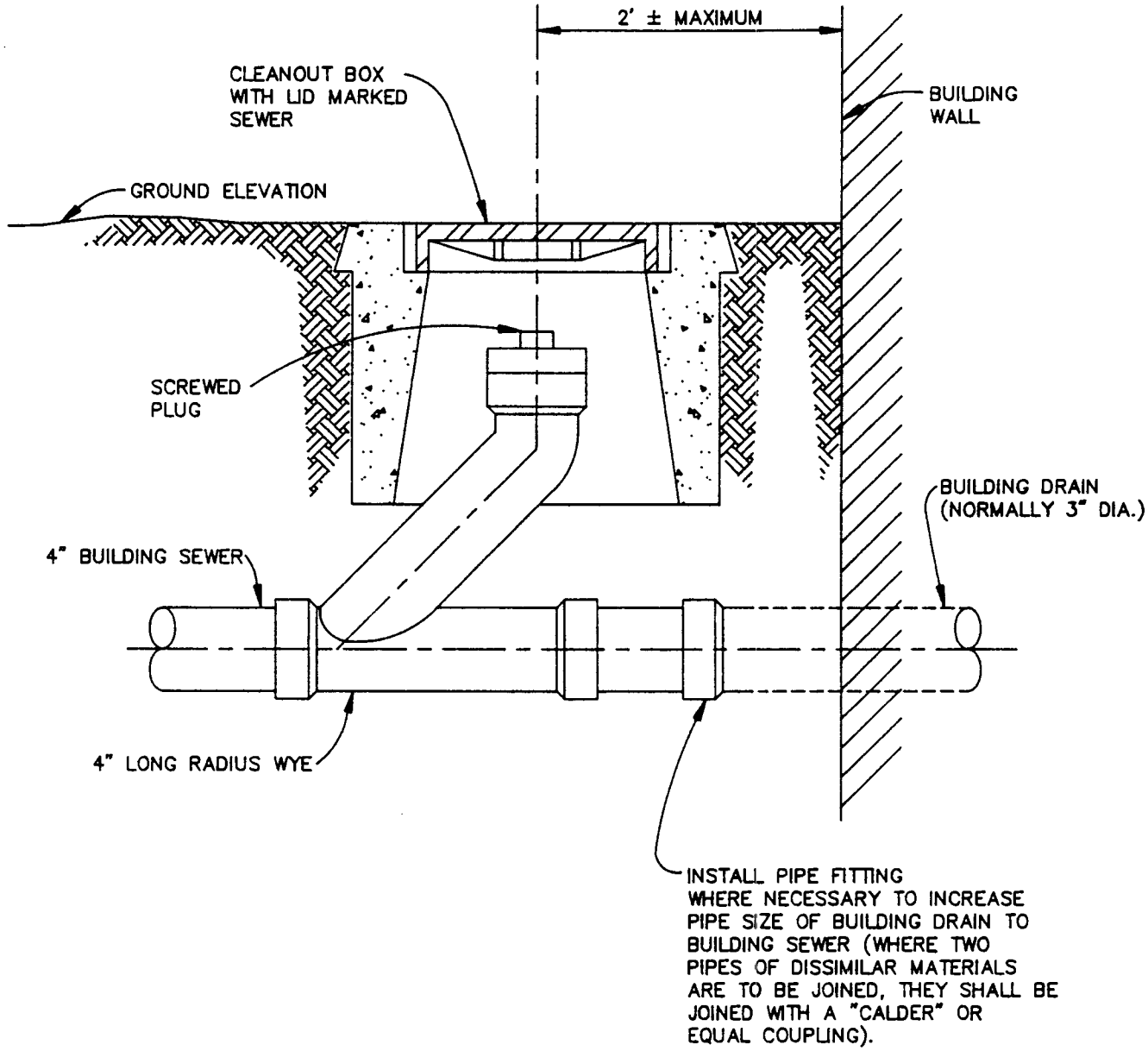

SCALE: NONE	CITY OF ST. HELENA	DATE: JUNE 1993
DRAWN: DRH	CLEANOUT DETAIL AT BUILDING	STD. NO.
CHK:		219
APPVD:		

NOTE: WHERE BUILDING SEWERS ARE LOCATED UNDER DRIVEWAYS, CAST IRON OR DUCTILE IRON SEWER PIPE SHALL BE USED.

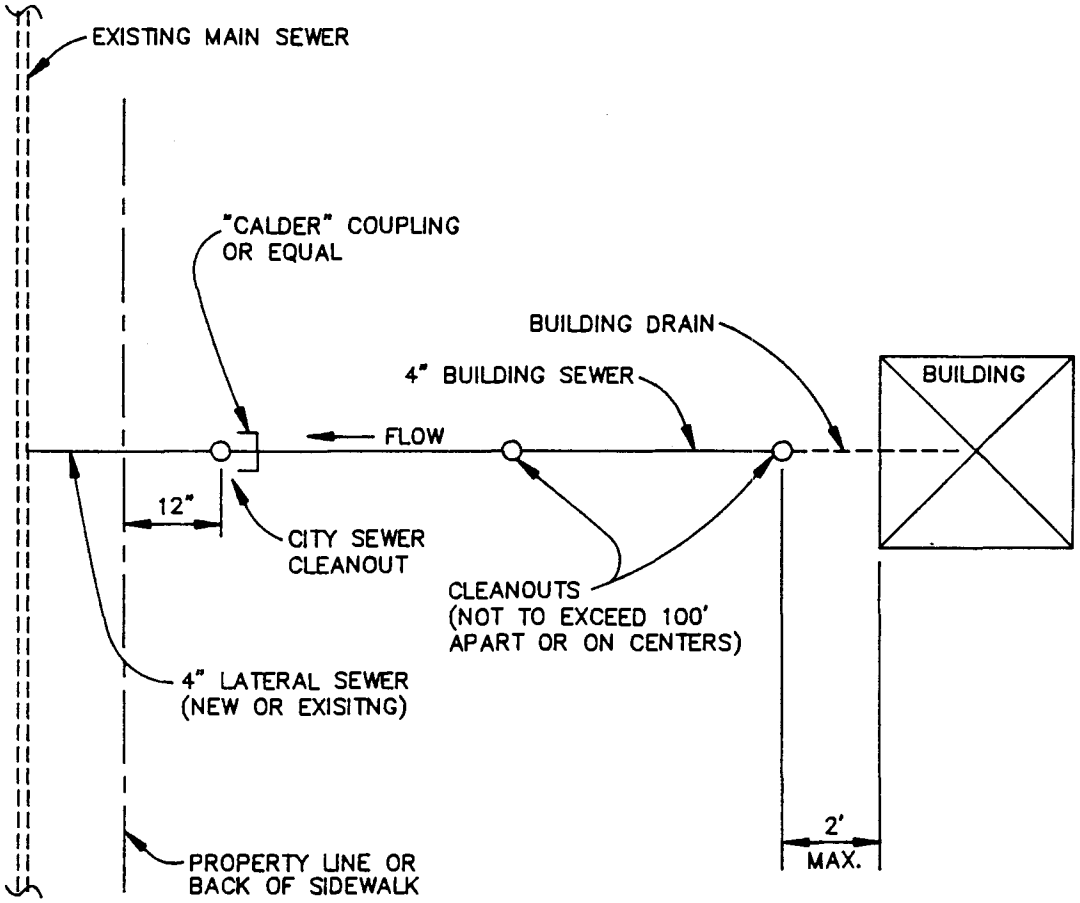

PLAN

SCALE: NONE	CITY OF ST. HELENA	DATE: JUNE 19[illegible]
DRAWN: DRH	TYPICAL SERVICE SEWER CONNECTION DETAILS	STD. NO. 220
CHK:		
APPVD:		

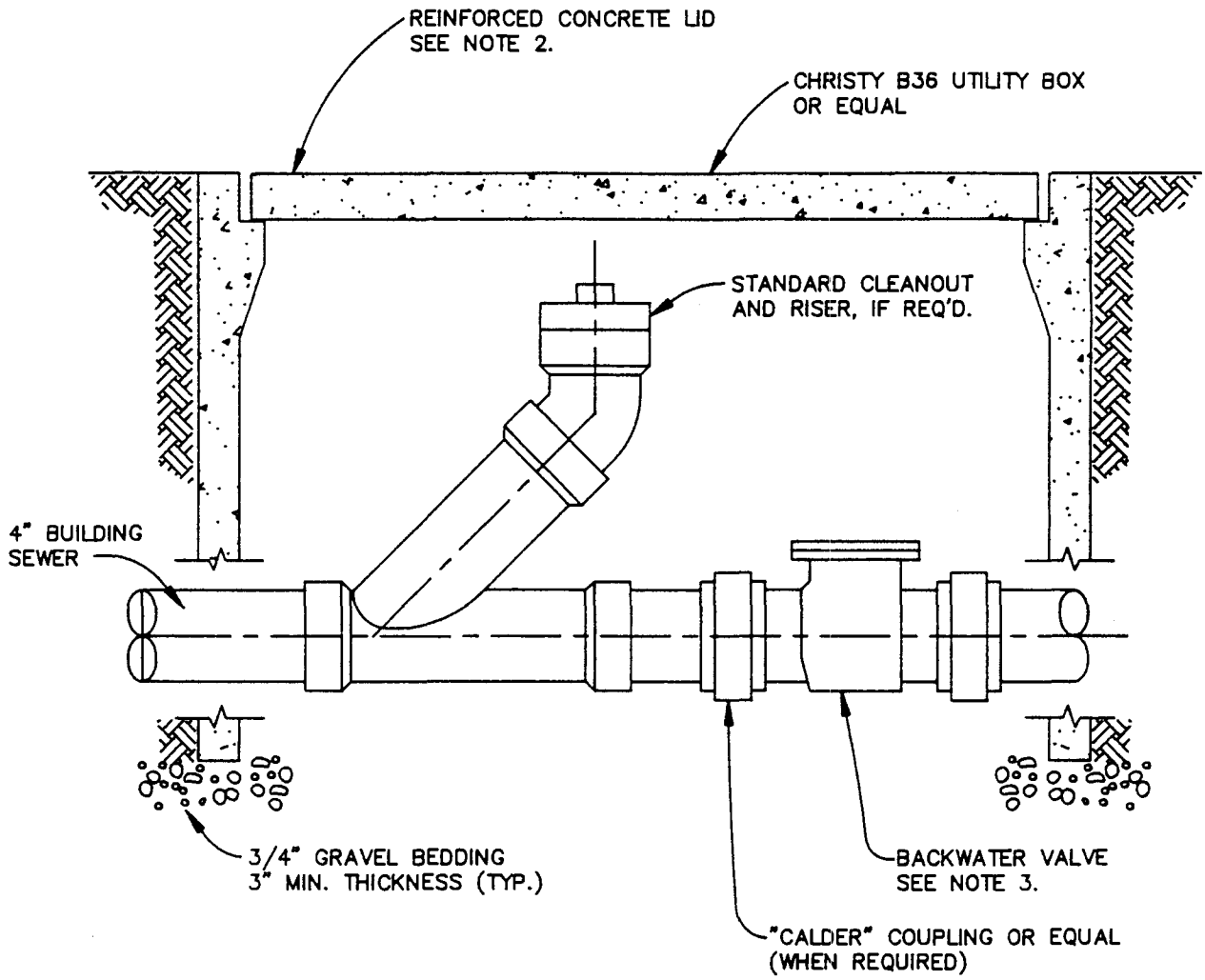

NOTES:

1. THIS INSTALLATION IS REQUIRED WHEREVER THE LOWEST FINISHED FLOOR ELEVATION IS TWELVE (12) INCHES, OR LESS, ABOVE THE TOP ELEVATION OF THE NEAREST UPSTREAM MANHOLE OR CLEANOUT.
2. IF THE LID IS SUBJECT TO VEHICULAR TRAFFIC, USE LID DESIGNED FOR H-20 TRAFFIC LOADINGS.
3. BACKWATER VALVE SHALL BE CAST IRON OR CAST BRONZE. VALVE SHALL BE APPROVED BY THE CITY ENGINEER.

SCALE: NONE	**CITY OF ST. HELENA**	DATE: JUNE 1993
DRAWN: DRH	BACKWATER CHECK VALVE INSTALLATION	STD. NO.
CHK:		221
APPVD:		

NOTES:

PIPE BEDDING AND TRENCH BACKFILL MATERIAL SHALL BE A WELL GRADED MATERIAL AND SHALL HAVE A MINIMUM SAND EQUIVALENT VALUE OF 30 AND SHALL CONFORM TO THE FOLLOWING GRADINGS:

	PERCENT PASSING				
	3"	3/4"	3/8"	NO.4	NO.16
PIPE BEDDING		100	80–100	0–50	0–5
TRENCH BACKFILL	100			35–100	

IN ADDITION WHEN TESTED WITH THE FOLLOWING SERIES OF SIEVES, NO MORE THAN 25% OF THE MATERIAL WILL BE RETAINED BETWEEN ANY ADJACENT SIEVES: 3", 2–1/2", 2", 1–1/2", 1", 3/4", 1/2", 3/8", NO. 4, NO. 8, NO. 16, NO. 30, NO. 50, NO. 100, AND NO. 200.

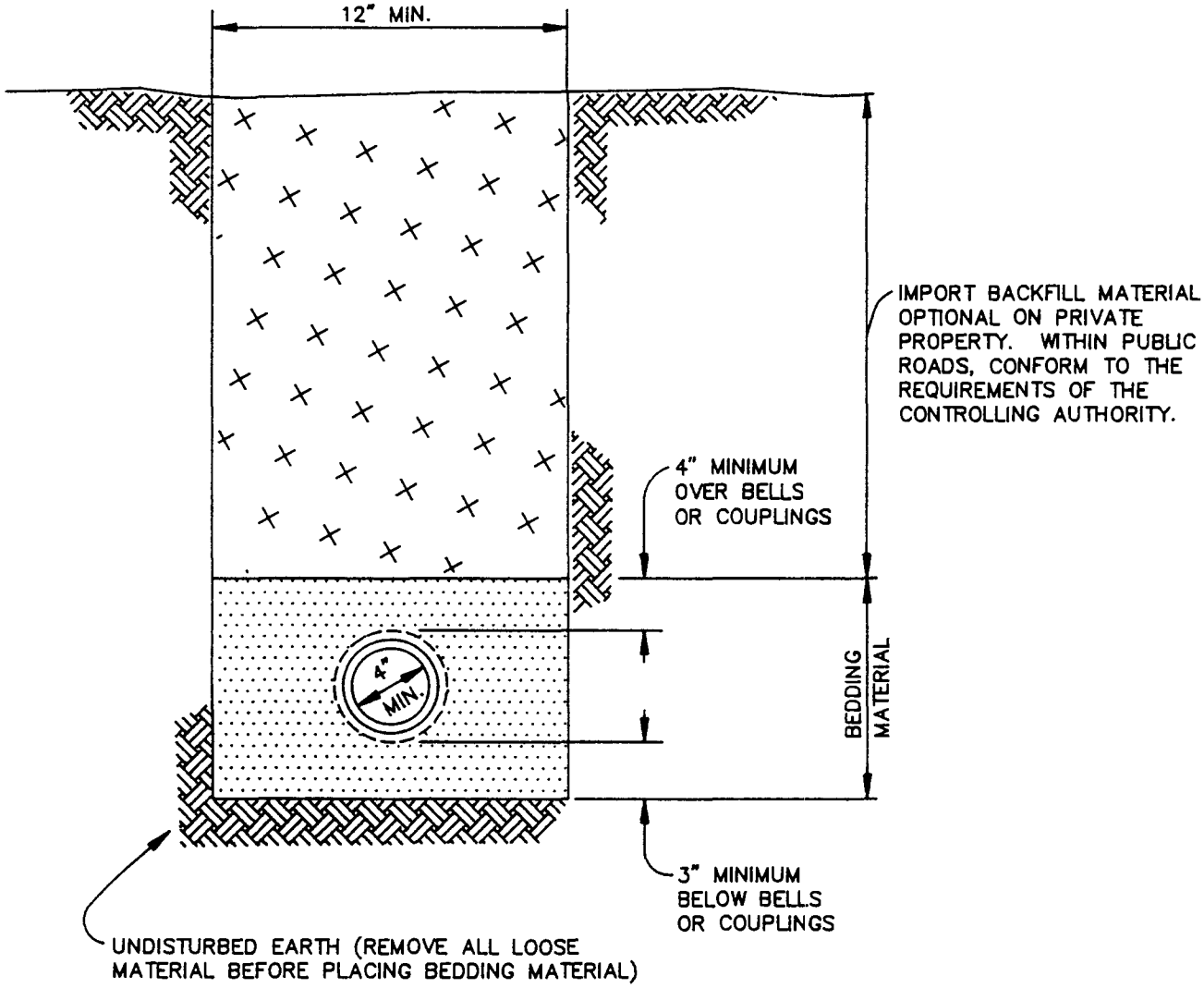

SCALE: NONE	CITY OF ST. HELENA	DATE: JUNE 1993
DRAWN: DRH	SERVICE SEWER TRENCH DETAIL	STD. NO.
CHK:		222
APPVD:		

NEW SEWER

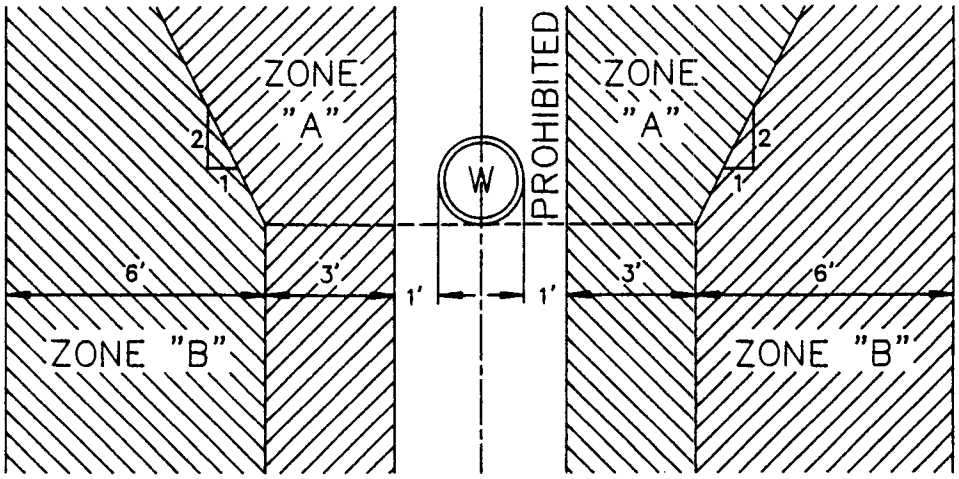

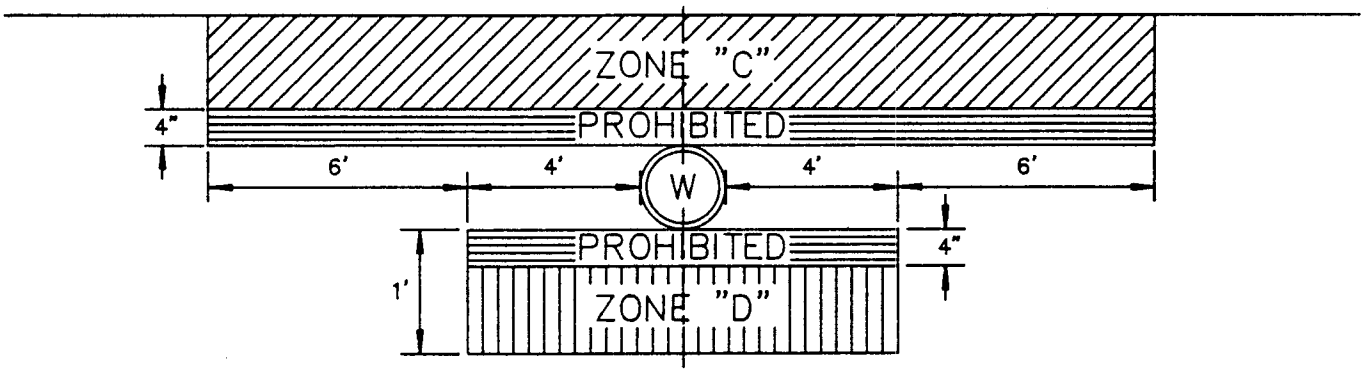

NEW SEWER BEING CONSTRUCTED

ZONE

A SEWER LINES PARALLEL TO WATER MAINS SHALL NOT BE PERMITTED IN THIS ZONE WITHOUT APPROVAL FROM THE RESPONSIBLE HEALTH AGENCY AND WATER SUPPLIER.

B A SEWER LINE PLACED PARALLEL TO A WATER LINE SHALL BE CONSTRUCTED OF:
1. EXTRA STRENGTH VITRIFIED CLAY PIPE WITH COMPRESSION JOINTS.
2. PLASTIC SEWER PIPE WITH RUBBER RING JOINTS (PER ASTM D3034) OR EQUIVALENT.
3. CAST OR DUCTILE IRON PIPE WITH COMPRESSION JOINTS.
4. REINFORCED CONCRETE PRESSURE PIPE WITH COMPRESSION JOINTS, (PER AWWA C300 OR C301 OR C303).

C A SEWER LINE CROSSING A WATER MAIN SHALL BE CONSTRUCTED OF:
1. DUCTILE IRON PIPE WITH HOT DIP BITUMINOUS COATING AND MECHANICAL JOINTS.
2. A CONTINUOUS SECTION OF CLASS 200 (DR 14 PER AWWA C900) PLASTIC PIPE OR EQUIVALENT, CENTERED OVER THE PIPE BEING CROSSED.
3. A CONTINUOUS SECTION OF REINFORCED CONCRETE PRESSURE PIPE (PER AWWA C302) CENTERED OVER THE PIPE BEING CROSSED.
4. ANY SEWER PIPE WITHIN A CONTINUOUS SLEEVE.

D A SEWER LINE CROSSING A WATER MAIN SHALL BE CONSTRUCTED OF:
1. A CONTINUOUS SECTION OF DUCTILE IRON PIPE WITH HOT DIP BITUMINOUS COATING.
2. A CONTINUOUS SECTION OF CLASS 200 (DR 14 PER AWWA C900) PLASTIC PIPE OR EQUIVALENT, CENTERED ON THE PIPE BEING CROSSED.
3. A CONTINUOUS SECTION OF REINFORCED CONCRETE PRESSURE PIPE (PER AWWA C302) CENTERED ON THE PIPE BEING CROSSED.
4. ANY SEWER PIPE WITHIN A CONTINUOUS SLEEVE.
5. ANY SEWER PIPE SEPARATED BY A TEN-FOOT BY TEN-FOOT, FOUR-INCH-THICK REINFORCED CONCRETE SLAB.

SCALE: NONE	**CITY OF ST. HELENA**	DATE: JUNE 1993
DRAWN: DRH	SEWER SEPARATION REQUIREMENTS	STD. NO.
CHK:		223
APPVD:		

6.0 Overflow Emergency Response Plan

6 Overflow Emergency Response Plan

A copy of the City's Overflow Emergency Response Plan (ERP) can be found as an attachment to this section. The ERP protocols are summarized below. The ERP is to be used in conjunction with the Sanitary Sewer Overflow & Backup Response Plan, a field guide developed in 2008 (also attached).

6.1 Notification

This section includes information on how the City is to be notified of an SSO through a complaint or a report. Additionally, this section includes the chain of communication leading up to the response to the overflow.

The City has an emergency on-call service 24-hours a day, every day of the year with a goal to respond to all calls within 30 minutes. The City will clear all plugged sewer laterals from the property line and all City main lines. If the problem is in the homeowner's section of the lateral, the City crew will inform them of the situation. It would be the homeowner's responsibility for the upper lateral and house plumbing. As listed on the City's website, anyone wishing to report an SSO should contact the Department of Public Works:

Address:	1480 Main Street, St. Helena, CA 94574
Hours:	8:00 a.m. - 5:00 p.m.
Phone:	707-968-2658
After Hours Phone:	707-967-2850 or 911
Fax:	707-967-2806
Email:	publicworks@ci.st-helena.ca.us

Immediately upon receipt of a notice of a SSO, the following actions take place:

- Public Works Director (or nights and weekends sewer standby person) is notified of SSO.
- Public Works Director notifies Collection System Operation Team. (Nights and weekends standby person responds and identifies need for additional personnel).
- Collection System Operation Team mobilizes to location of SSO to assess overflow.

6.2 Response

Once the Collection System Operation Team is notified of a SSO, the chain of events is as follows:

It is the responsibility of the first St. Helena wastewater (STHWW) employee arriving at the scene of the sewer overflow location to protect the health and safety of the public by immediately beginning the necessary steps to mitigate the impact of the overflow.

1. Initial Assessment and Response. General, quick steps to mitigate the situation can be taken once an employee becomes aware of the sewer overflow:

- Determine the cause of the overflow, e.g., line blockage, line breakage, pump mechanical or electrical failure, etc.
- If possible, take immediate steps to stop the overflow by rectifying the line blockage, isolating a pipe line breakage, restoring power, putting another pump into service, etc.
- Identify what, if any, resources can assist with the mitigating the cause of the overflow, including additional personnel, materials, supplies and/or equipment.

2. Spill Containment and Control. The primary objective of the responders to a sewer overflow incident is to protect the public's health. Therefore, if it is at all possible that the public may come into contact with any sewage material from an overflow event, the responders should remove that possibility by isolating the surrounding area. The perimeter of the sewer overflow site can be controlled with cones, barricades, vehicles or some other barrier that restricts access.

   After the public has been isolated from the spill area, containment and clean-up can proceed. The spill should be contained within the smallest possible area, and every effort should be made to prevent the discharge of sewage into any receiving waters. The following are containment suggestions:
   - For spills that occur within the Wastewater Treatment facility, every effort should be made to keep the spill from leaving the facility's property.
   - Determine the immediate destination of the overflow, e.g. storm drain, street curb gutter, body of water, culvert, landscaped area, etc.
   - Identify and request the necessary equipment to contain or isolate the overflow if not readily available. Take immediate steps to contain the overflow, e.g. block or bag the storm drain inlet, recover the overflow by pumping, construct a containment pond, divert into a downstream manhole, etc.
   - In the event of a prolonged line blockage, breakage or collapse, a determination must be made to set up a portable by-pass pumping operation around the problem area. If this becomes the case, personnel will be required to continuously monitor the by-pass pumping operation until it can be terminated.

3. Spill Cleanup. SSO sites are to be thoroughly cleaned as soon as possible after the overflow incident is mitigated. No residue will be left for future rains to carry away or for public contact to occur. The following steps should be taken to ensure that the overflow sites are returned to their former conditions:
   - Where possible, the area is to be thoroughly flushed and cleaned of any sewage or wash-down water. Solids and debris are to be flushed, swept, raked or picked up by hand and properly disposed of.
   - Where appropriate, the overflow site is to be disinfected with HTH (hydrated calcium hypochlorite) and water or liquid bleach (aqueous sodium hypochlorite). Never flush any disinfectant into a storm drain or body of water.
   - If sewage has ponded, the pond should be pumped dry and the residue and site cleanup managed as previously mentioned

4. Spill Classification and Quantification. There are three general classifications of SSOs:

   - Category 1 SSO – Spills of any volume that reach surface water without being fully recovered
   - Category 2 SSO – Spills over 1,000 gallons that do not reach surface water or that are completely recovered
   - Category 3 SSO– Spills less than 1,000 gallons that do not reach surface water

   No matter what the SSO classification or its volume, the need for containment, control and recovery procedures by STHWW employees and our responsibility to understand and comply with the reporting requirements remains.

   Spill quantification requires careful documentation and close observation of discharges. Staff should make every effort to maintain a careful chronology of the events during a spill and make every attempt to conduct linear measurements of the discharge streams and flow velocities in order to effectively quantify the spill volumes. If possible, photo documentation of the spill event should also become a routine procedure in the spill documentation process. Official estimates of the spill volume will be the responsibility of the Director of Public Works. A few other types of spills, and the compliance requirements, are outlined in the next couple of sections.

5. Spill Documentation. Aside from the "SSO Event Report" Form, STHWW employees may also (at the discretion of the Director of Public Works) compile, document and report an "Official Spill Record" which can assist in providing a record of the events of the incident. The Spill Events Record may include:
   - Event times (failure, discharge start and stop)
   - Personnel on site
   - Arrival and departure time of all personnel
   - Equipment on site
   - Milestone events (if any)
   - Photo and video documentation
   - Spill volume estimates and the method used to determine the estimates
   - Arrival time of outside resources (and list of the resources)
   - Regulatory agency representatives on site (obtain their business cards)
   - Spill recovery volume estimates

6. Posting. Posting contaminated water signs is required downstream of the location of an SSO. Posting should be implemented under the following guidelines:
   - Lagoons, wetlands, or creek beds shall be posted at 50 foot intervals for high use areas and 600 foot intervals for low use areas. Both sides of creek beds must be posted.

7. Spill Sampling and Monitoring. If more than 50,000 gallons reached waterways, sampling of the body of water is mandatory. Sampling procedures are included in the Water Quality Monitoring Program (attached to the ERP). At the direction of the

Director of Public Works, sampling of lower volume spills may also be performed. Conducting sampling at the appropriate locations allows staff to establish and monitor the levels of contamination as well as to establish or compare with the natural background levels of bacteria in the receiving waters.

All final sampling and monitoring results will be uploaded into CIWQS at http://ciwqs.waterboards.ca.gov.

6.3 Reporting

The Public Works Director or his/her designee is responsible for completing, or overseeing the completion of the SSO Event Form (attached) and CIWQS online reporting (http://ciwqs.waterboards.ca.gov). In addition, the Office of Emergency Services will be notified of SSOs where 1,000 gallons or more reach waterways or are likely to reach waterways when not fully recovered from a drainage channel or a stormdrain system.

Depending on the SSO classification, CIWQS reporting procedures are as follows:

- Category 1 (all spills that reach waterways without being fully recovered):
  - Submit draft report within 3 days of becoming aware of SSO
  - Finalize report and certify within 15 days of the end of the SSO
  - If more than 50,000 gallons reached the waterways:
    - Submit all water quality results to CIWQS as soon as they become available
    - Develop and submit an SSO Technical Report within 45 days of the end of the SSO

- Category 2 (spills of 1,000 gallons or more that do not reach waterways or that are fully recovered):
  - Submit draft report within 3 days of becoming aware of SSO
  - Finalize report and certify within 15 days of the end of the SSO

- Category 3 (spills less than 1,000 gallons that do not reach waterways or that are fully recovered):
  - Submit certified report within 30 calendar days of the end of month in which SSO the occurred.

6.4 Impact Mitigation

Based upon information from previous SSOs and sewer system maintenance activities, potential system failures have been identified as:

- Grease blockage
- Root invasion
- Old lines (sections of the system that are more than 100 years old)

The City's Street Department maintains a *Sanitary Sewer Maintenance Report* which is recorded each time maintenance work is performed on a line (see attachments). Sewer line

maintenance is generally performed twice per year, and as necessary. The City has a planned schedule for cleaning sewer lines that are highly susceptible to root intrusion, grease, and various debris. The frequency of cleaning a sewer line is determined by the cleaning history needs, with the goal of preventing sewer line blockage and overflows. Areas with previous SSOs caused by grease or roots are reviewed more frequently to ensure that the same problem does not occur again. Sewer system maintenance is further discussed in Section 6 (Measures and Activities) of this SSMP.

The City cleans the lines in a variety of ways using the following equipment:

	Rodder The Rodder is used to remove roots, heavy grease, and other obstructions from inside the sewer lines by quickly rotating a hydraulically driven continuous steel cable rod with a cutting blade or saw attached to the leading cable.
	Hydro The Hydro cleans grit and grease accumulated from sewer mains with water pressure, scouring the inside of the pipes. The Hydro is used primarily for cleaning sewer lines that have the highest potential for blockage, mostly due to grease being discharged into the sewer lines. These areas are described as "hot spots".

When an SSO results in release of sewage into the street, the following procedures are used to remove the wastewater and clean the affected area as soon as possible after the overflow incident is mitigated. No residue will be left for future rains to carry away or for public contact to occur. The following steps should be taken to ensure that the overflow sites are returned to their former conditions:

- Where possible, the area is to be thoroughly flushed and cleaned of any sewage or wash-down water. Solids and debris are to be flushed, swept, raked or picked up by hand and properly disposed of.
- Where appropriate, the overflow site is to be disinfected with HTH (hydrated calcium hypochlorite) and water or liquid bleach (aqueous sodium hypochlorite). Never flush any disinfectant into a storm drain or body of water.
- If sewage has ponded, the pond should be pumped dry and the residue and site cleanup managed as previously mentioned

When an SSO results in release of sewage into a surface water, efforts are made to remove the wastewater and minimize negative impact on the affected area using pumps and manually collecting solids. Posting “contaminated water” signs is required downstream of the location of an SSO. Posting should be implemented under the following guidelines:

- Lagoons, wetlands, or creek beds shall be posted at 50 foot intervals for high use areas and 600 foot intervals for low use areas. Both sides of creek beds must be posted. If 50,000 or more gallons reached waterways, sampling of the body of water is mandatory. Sampling procedures are included in the Water Quality Monitoring Program (attached to the ERP). At the direction of the Director of Public Works, sampling of lower volume spills may also be performed. Conducting sampling at the appropriate locations allows staff to establish and monitor the levels of contamination as well as to establish or compare with the natural background levels of bacteria in the receiving waters.

6.0 Overflow Emergency Response Plan

Attachments

Overflow **Emergency** Response Plan

CITY OF ST. HELENA WASTEWATER ENTERPRISE

Overflow Emergency Response Plan

Department of Public Works
1480 Main St
SAINT HELENA CA 94574
Phone 707-968-2658 • Fax 707-967-2806

Revised April 2014

1.0 Purpose

The City of St. Helena Wastewater Enterprise (STHWW) has developed this Overflow Emergency Response Plan (ERP) in order to fulfill requirements in its *National Pollutant Discharge Elimination System* (NPDES) and in the *Sanitary Sewer System Waste Discharge Requirements* (WDR) and the associated *Monitoring Reporting Program* (MRP). The procedures described in the ERP ensure that the protection of the environment and of the public's health and safety remains a concern with a high priority.

This document provides the necessary guidelines for the STHWW staff when they must respond to a sanitary sewer overflow event (spill or SSO) in the STHWW service area. It contains the following elements:

- **General information**
- **Basic spill definitions**
- **The spill response organizational matrix**
- **Guidance for spill containment and/or control**
- **Spill monitoring**
- **Proper notification protocols and forms**
- **Training**
- **Phone Directory**
- **Attachments:**
    - **SSO Event Report Form (3 pages)**
    - **SSO Water Quality Monitoring Plan (27 pages including appendices)**

2.0 General Information

2.1 **Background and Regulatory Requirements**: STHWW operates its wastewater collection, treatment and reclamation facilities under California Regional Water Quality Control Board, San Francisco Bay Region (Regional Water Board) Order No. R2-2010-0105 and Order 87-090. In addition, the STHWW is covered under Regional or Statewide General Permits issued by the Regional Water Board and the State Water Resources Control Board (State Water Board). With Regional Water Board Resolution R2-2003-0095 a collaborative effort between the Regional Water Board and the Bay Area Clean Water Agencies (BACWA) was initiated to develop and implement regional sewer system management planning assistance for individual wastewater system operators. With Resolution 2004-0080, the State Water Board required the development of a Sanitary Sewer Overflow Reduction Program. This ERP, initially known as a Sewer Overflow Response Program or SORP, was first developed to comply with that program. Later on, the State Water Board issued the WDR (Order 2006-0003-DWQ) and associated MRP. The WDR requires development of a Sewer System Management Plan (SSMP), with the ERP as one element of the SSMP. The State Water Board revised the MRP several times since first issuing it; the latest MRP amendment was issued in July 2013 through WQ 2013-0058-EXEC. The current version of the ERP (April 2014) was revised to comply with the 2013 MRP amendment.

2.2 **Overflow Emergency Response Plan**: The WDR requires development of an ERP to establish procedures for responding to spills to protect public health and the environment. Provision D.13(vi) of the WDR requires that each ERP include, at a minimum, the following elements:

(a) Proper notification procedures so that the primary responders and regulatory agencies are informed of all SSOs in a timely manner;

(b) A program to ensure an appropriate response to all overflows;

(c) Procedures to ensure prompt notification to appropriate regulatory agencies and other potentially affected entities (e.g. health agencies, Regional Water Boards, water suppliers, etc.) of all SSOs that potentially affect public health or reach the waters of the State in accordance with the MRP. All SSOs shall be reported in accordance with the MRP, the California Water Code, other State Law, and other applicable Regional Water Board WDRs or NPDES permit requirements. The SSMP should identify the officials who will receive immediate notification;

(d) Procedures to ensure that appropriate staff and contractor personnel are aware of and follow the Emergency Response Plan and are appropriately trained;

(e) Procedures to address emergency operations, such as traffic and crowd control and other necessary response activities; and

(f) A program to ensure that all reasonable steps are taken to contain and prevent the discharge of untreated and partially treated wastewater to waters of the United States and to minimize or correct any adverse impact on the environment resulting from the SSOs, including such accelerated or additional monitoring as may be necessary to determine the nature and impact of the discharge.

2.3 **Civil Monetary Remedies and Penalties**: The California Water Code provides for fines for violations of the NPDES and Order 87-090 of up to $25,000 per day for each day in which a violation occurs. Additional fines for spills which were not, or cannot be cleaned up, may also be imposed. These additional fines may be up to $25 per gallon for each gallon in excess of 1,000 gallons discharged to a receiving water. Intentional negligence or repeated violations may be subject to higher penalties. Significant fines may also be imposed for failing or refusing to furnish technical or monitoring reports or for falsifying information in these reports.

3.0 Definitions

3.1 **Sanitary sewer system**: The wastewater collection system including sewers, pipes, pumps or other conveyances that convey wastewater (e.g. domestic, commercial, and industrial sewage) to the wastewater treatment plant.

3.2 **Sewer overflows**: Each instance of a surface discharge from a sanitary sewer system at any point upstream of the sewage treatment plant. Sewer overflows often contain high levels of suspended solids, pathogenic organisms, toxic pollutants, nutrients, oxygen demanding organic compounds, oil and grease and other pollutants. Sewer overflows can cause a temporary exceedance of applicable water quality objectives, pose a threat to the public heath, adversely affect aquatic life, and impair the public recreational use and aesthetic enjoyment of surface waters in the impacted areas. This expression is interchangeable with the terms "spill" or "sewage spill".

3.3 **Surface waters**: Surface waters include (1) the Napa River, (2) Sulphur Creek, (3) York Creek, (4) ephemeral streams, (5) lagoons, (6) dry creeks, (7) wetlands, (8) lakes, (9) natural ponds, (10) man-made canals and (11) storm drains.

3.4 **Reportable event**: Sanitary sewer overflows (SSOs) of any volume resulting from the STHWW system's failure or flow condition are reportable – those that are 1,000 gallons or more that reach surface waters, or are likely to reach surface waters, must be reported within 2 hours to the California Governor's Office of Emergency Services (OES). All SSOs must be electronically reported to the California Integrated Water Quality System (CIWQS); there are different timeframes for CIWQS reporting depending on the SSO's severity (see discussion on SSO categories in Section 5.4). Note that overflows or backups into buildings caused by blockages or other problems in private facilities are not SSOs.

3.5 **Initial receiving waters**: The surface water body that is first impacted by the spill.

3.6 **Secondary receiving waters**: The final surface water body that is impacted by the spill.

3.7 **Informal enforcement**: The types of actions taken by the Regional Water Board that may be characterized as "less serious" in nature. Actions may include a (1) Notice of Violation, or (2) Request for Information.

3.8 **Formal enforcement**: The types of actions taken by the Water Board that may be characterized as "serious" in nature. Actions may include (1) Cleanup and Abatement Orders, (2) Cease and Desist Orders, (3) Referral to the Attorney General or District Attorney, (4) Administrative Civil Liabilities.

4.0 Spill Response Organization

The STHWW Spill Response Organization provides a clear organizational structure designed to facilitate an understanding of the responsibilities of each staff member in the agency with regards to spill events.

4.1 **Director of Public Works / City Engineer** – The primary role of the Director of Public Works is to take responsibility for effectively coordinating the overall response to the sewer overflow event once it has occurred. His/her responsibilities include:

- Assume primary management and coordination of all SSO response actions
- Request assistance or resources from other agencies if necessary
- Assess the SSO situation and establish action priorities
- Perform an initial assessment of the extent of the onsite and off-site impacts (if any)
- Direct immediate spill control and containment measures
- Advise the City Manager as soon as possible
- Delegate staff to begin the spill record documentation and spill notification protocols.
- Ensure that all oral and written reports are completed within the time allotted requirements
- Oversee contractor work (if needed) and cleanup activities
- Reviews the preliminary and final spill reports to CIWQS, for accuracy.
- Ensures that the details of the spill event are accurately entered into the STHWW Spill Overflow Report Log
- Documents, by photo, all spill response and abatement activities (as necessary)
- Provides media and public information whenever the City Manager is unavailable
- Updates the Overflow Emergency Response Plan and provides staff training (as necessary)

4.2 **Sewer Supervisor (or first responder)** – The duties of the Sewer Supervisor consist of providing coordination, under the direction of the Director of Public Works, to mitigate the sewer overflow event, by directing resources and staff to contain, control and clean up the spill. His/her responsibilities include:

- Mobilize staff and equipment for spill abatement activities
- Delegate assignments to staff members in order to achieve spill containment and control
- Turn on/off all necessary equipment or utilities as needed
- Dike and contain spill areas as directed
- Assist in the evacuation of personnel if necessary
- Set up emergency power sources if needed
- May conduct the initial notification to OES and the initial reports to CIWQS
- Maintain security control at the spill site

4.3 **Maintenance Workers** – The duties of this position are to assist the Sewer Supervisor in whatever manner is necessary to secure equipment, coordinate the repair and/or replacement of equipment, coordinate the efforts of the maintenance staff, procure supplies and equipment if necessary, etc.

SPILL RESPONSE ORGANIZATION

5.0 Overflow Response Procedures

It is the responsibility of the first STHWW employee arriving at the scene of the sewer overflow location to protect the health and safety of the public by **immediately** beginning the necessary steps to mitigate the impact of the overflow.

5.1 **Initial Assessment and Response** – General, quick steps to mitigate the situation can be taken once an employee becomes aware of the sewer overflow:

- Determine the cause of the overflow, e.g., line blockage, line breakage, pump mechanical or electrical failure, etc.

- If possible, take immediate steps to stop the overflow by rectifying the line blockage, isolating a pipe line breakage, restoring power, putting another pump into service, etc.

- Identify what, if any, resources can assist with the mitigating the cause of the overflow, including additional personnel, materials, supplies and/or equipment.

5.2 **Spill Containment and Control**

The primary objective of the responders to a sewer overflow incident is to protect the public's health. Therefore, if it is at all possible that the public may come into contact with any sewage material from an overflow event, the responders should remove that possibility by isolating the surrounding area. The perimeter of the sewer overflow site can be controlled with cones, barricades, vehicles or some other barrier that restricts access.

After the public has been isolated from the spill area, containment and clean-up can proceed. The spill should be contained within the smallest possible area, and every effort should be made to prevent the discharge of sewage into any receiving waters. The following are containment suggestions:

- For spills that occur within the Wastewater Treatment facility, every effort should be made to keep the spill from leaving the facility's property.

- Determine the immediate destination of the overflow, e.g. storm drain, street curb gutter, body of water, culvert, landscaped area, etc.

- Identify and request the necessary equipment to contain or isolate the overflow if not readily available. Take immediate steps to contain the overflow, e.g. block or bag the storm drain inlet, recover the overflow by pumping, construct a containment pond, divert into a downstream manhole, etc.

- In the event of a prolonged line blockage, breakage or collapse, a determination must be made to set up a portable by-pass pumping operation around the problem area. If this becomes the case, personnel will be required to continuously monitor the by-pass pumping operation until it can be terminated.

5.3 **Spill Cleanup**

SSO sites are to be thoroughly cleaned as soon as possible after the overflow incident is mitigated. No residue will be left for future rains to carry away or for public contact to occur. The following steps should be taken to ensure that the overflow sites are returned to their former conditions:

- Where possible, the area is to be thoroughly flushed and cleaned of any sewage or wash- down water. Solids and debris are to be flushed, swept, raked or picked up by hand and properly disposed of.

- Where appropriate, the overflow site is to be disinfected with HTH (hydrated calcium hypochlorite) and water or liquid bleach (aqueous sodium hypochlorite). Never flush any disinfectant into a storm drain or body of water.

- If sewage has ponded, the pond should be pumped dry and the residue and site cleanup managed as previously mentioned

5.4 **Spill Classification and Quantification**

There are three general classifications of SSOs:

- Category 1 SSO – Spills of any volume that reach surface water or are likely to reach surface waters because they entered the storm drain system or a ditch and were not fully recovered
- Category 2 SSO – Spills over 1,000 gallons that do not reach surface water
- Category 3 SSO – Spills less than 1,000 gallons that do not reach surface water

No matter what the SSO classification or its volume, the need for containment, control and recovery procedures by STHWW employees and our responsibility to understand and comply with the reporting requirements remains.

Spill quantification requires careful documentation and close observation of discharges. Staff should make every effort to maintain a careful chronology of the events during a spill and make every attempt to conduct linear measurements of the discharge streams and flow velocities in order to effectively quantify the spill volumes. Photo documentation of the spill event should also become a routine procedure in the spill documentation process. Official estimates of the spill volume will be the responsibility of the Director of Public Works. A few other types of spills, and the compliance requirements, are outlined in the next couple of sections.

5.5 **Spill Documentation**

Aside from the "SSO Event Report" (attached), STHWW employees may also (at the discretion of the Director of Public Works) compile, document and report an "Official Spill Record" which can assist in providing a record of the events of the incident. The Spill Events Record may include:

- Event times (failure, discharge start and stop)
- Personnel on site
- Arrival and departure time of all personnel
- Equipment on site

- Milestone events (if any)
- Photo and video documentation
- Spill volume estimates and the method used to determine the estimates
- Arrival time of outside resources (and list of the resources)
- Regulatory agency representatives on site (obtain their business cards)
- Spill recovery volume estimates

5.6 **Posting**

Posting contaminated water signs is required downstream of the location of an SSO. Posting should be implemented under the following guidelines:

- Lagoons, wetlands, or creek beds shall be posted at 50 foot intervals for high use areas and 600 foot intervals for low use areas. Both sides of creek beds must be posted.

5.7 **Spill Sampling and Monitoring**

If more than 50,000 gallons reached waterways, sampling of the body of water is mandatory. Sampling procedures are included in the Water Quality Monitoring Program (attached). At the direction of the Director of Public Works, sampling of lower volume spills may also be performed. Conducting sampling at the appropriate locations allows staff to establish and monitor the levels of contamination as well as to establish or compare with the natural background levels of bacteria in the receiving waters.

All summary sampling and monitoring results will be uploaded into CIWQS at http://ciwqs.waterboards.ca.gov.

6.0 Reporting

It is the responsibility of the Director of Public Works or the Sewer Supervisor to make the initial notifications to OES and to prepare the preliminary written report for review.

6.1 **Notification to the Office of Emergency Services (OES)**

The Office of Emergency Services will be notified of SSOs where 1,000 gallons or more reach waterways or are likely to reach waterways when not fully recovered from a drainage channel or a stormdrain system. Procedures are as follows:

- Notification will be made by phone at (800) 852-7550 within 2 hours of becoming aware of the SSO. The caller will record the OES notification control number.

- The caller shall report the following information:
  - The name and phone number of the caller reporting the spill
  - The responsible owner of the sewer system (STHWW)
  - The location of the overflow
  - The estimated total overflow amount
  - The surface water(s) that may be affected by the overflow
  - Whether or not the spill is still occurring at the time of the notification

- If the flow volume or other information is significantly revised at a later point, the caller (or a supervisor) will call back to update OES on the spill volume.

6.2 **CIWQS Notifications**

All SSOs must be electronically reported to the California Integrated Water Quality System (CIWQS) at http://ciwqs.waterboards.ca.gov. The State Water Board provides screen-by-screen CIWQS reporting instructions in the Discharger Workbook available at: http://www.swrcb.ca.gov/water_issues/programs/sso/docs/discharger_workbook.pdf

Depending on the SSO classification, there are different timeframes for CIWQS reporting:

Category 1 (all spills that reach waterways or are likely to reach waterways when not fully recovered from a drainage channel or a stormdrain system):

- Submit draft report within 3 days of becoming aware of SSO
- Finalize report and certify within 15 days of the end of the SSO
- If more than 50,000 gallons reached the waterways:
  - Submit all water quality results to CIWQS as soon as they become available (see Section 5.7 and attached Water Quality Monitoring Program)
  - Develop and submit an SSO Technical Report within 45 days of the end of the SSO (refer to requirements in Provision B.5 of the MRP WQ 2013-0058-EXEC).

Category 2 (spills of 1,000 gallons or more that do not reach waterways or that are fully recovered)

- Submit draft report within 3 days of becoming aware of SSO
- Finalize report and certify within 15 days of the end of the SSO

Category 3 (spills less than 1,000 gallons that do not reach waterways or that are fully recovered):

- Submit certified report within 30 calendar days of the end of the month in which the SSO the occurred.

6.3 **Notification to other recipients**

OES will notify Napa County Department of Environmental Management in the event that an SSO is reported to OES. In any area where an SSO has the potential to imminently and substantially affect human health the public must also be notified through posting (see Section 5.6). Beyond that, at the direction of the City Manager, STHWW will forward a copy of the spill report, depending on the nature, location and volume of the spill, to other public agencies, local interest groups or the media as warranted.

6.4 **Reporting Responsibilities**

The Sewer Supervisor has the authority to make the Initial Notification to OES. The electronic reporting to CIWQS can be made by the Sewer Supervisor or the Director of Public Works, but shall be reviewed for completeness and accuracy before being certified.

6.5 **Report Forms**

All spill information must be recorded using the STHWW "SSO Event Report" Form (attached).

6.6 **Retaining Records**

All spill reporting records, including the STHWW Overflow Reporting Log, will be retained for a period of five (5) years from the date of the final report in the Administrative Office files. The records shall be filed in the "NPDES, Spill Report Records" file.

7.0 Revisions & Employee Training

7.1 **ERP Revisions**

The STHWW Overflow Emergency Response Plan shall be reviewed and revised, as necessary, after each overflow event. The Director of Public Works will conduct an annual review of the ERP in order to maintain a document that remains up-to-date.

7.2 **Annual Training**

The Director of Public Works, or his/her designee, shall schedule annual training designed to identify resource shortcomings, clarify roles and responsibilities, improve response performance and reveal any response weaknesses. The training may consist of:

- Response training –An annual awareness training meeting will be conducted with respect to the details of the ERP and the responsibilities of each employee. All employees will attend this meeting. Additional training sessions may also be conducted by the Sewer, Wastewater Treatment and other divisions to further familiarize employees with the response procedures.

- Tabletop exercise – A simulated spill event may be scheduled, according to need, to allow the exercise participants to discuss and understand the necessary response actions, test equipment and gauge the response ability of the employees. Scheduling a simulated Tabletop exercise will be at the discretion of the Director of Public Works.

- Spill Review Committee – After each SSO, STHWW's will convene a Spill Review Committee to review the event's cause, the procedural response of the employees, the regulatory and compliance documentation and whether additional issues and/or resources have to be addressed.

8.0 Phone Directory

The following phone, fax and email directory provides STHWW personnel with the current contacts for regulatory agencies and resources:

REGULATORY AGENCIES

Governor's Office of Emergency Services (OES)
(800) 852-7550
(916) 262-1677 Fax

Regional Water Quality Control Board (Regional Water Board)
(510) 622-2460
(510) 622-5633 Fax

Napa County Department of Environmental Management
(707) 253-4471 (business hrs.)
(800) 540-5306

CONTRACTOR SERVICES

Montelli Construction
436 St. Helena Hwy
944-1167

Harold Smith & Son
800 Crane Ave.
963-7977

M&M Sanitary
American Canyon
224-4548

OTHER CONTACTS

PG&E
(800) 743-5000 (Emergency number)

REMIF (City Insurance Company)
(707) 938-2388
(707) 938-0374 Fax

Napa County Public Works
(707) 253-4351
(707) 944-0196 Roads

Upper Valley Disposal
(707) 963-7988

Railroad Police
(707) 477-5955 (Emergency)

Caltrans
(707) 224-8684

City of St. Helena
Office of the Director of Public Works
1480n Main Street } St. Helena, CA } 94574
Phone: 707.968.2658 | Fax: 707.967.2806
www.cityofsthelena.org

SSO Event Report

No.	Question	Multiple Choice Response Circle One (if blank provide written response)
	* Denotes required response	
Physical Location Details		
1	Address *	
	City	St. Helena
	State	CA
	ZIP	94574
2	**Estimated Spill Volumes**	
a)	Estimated spill volume that reached a separate storm drain that flows to a surface water body? *	in gallons
b)	Estimated spill volume recovered from the separate storm drain that flows to a surface water body? (Do not include water used for clean-up) *	in gallons
c)	Estimated spill volume that directly reached a drainage channel that flows to a surface water body? *	in gallons
d)	Estimated spill volume recovered from a drainage channel that flows to a surface water body? *	in gallons
e)	Estimated spill volume discharged directly to a surface water body? *	in gallons
f)	Estimated spill volume recovered from surface water body? *	in gallons
g)	Estimated spill volume discharged to land? (Includes discharges directly to land, and discharges to a storm drain system or drainage channel that flows to a storm water infiltration/retention structure, field, or other non-surface water location. Also, includes backups to building structures) *	in gallons
h)	Estimated spill volume recovered from the discharge to land? (Do not include water used for clean-up) *	in gallons
3	Did the spill discharge to a drainage channel and/or surface water?*	Yes | No
4	Did the spill reach a storm drainpipe that is not part of a combined sewer system? *	Yes | No

City of St. Helena
Office of the Director of Public Works
1480n Main Street } St. Helena, CA } 94574
Phone: 707.968.2658 | Fax: 707.967.2806
www.cityofsthelena.org

SSO Event Report

No.	Question	Multiple Choice Response Circle One (if blank provide written response)
5	If spill reached a separate storm drainpipe, was all of the wastewater fully captured from the separate storm drain and returned to the sanitary sewer system? *	
6	Spill location Name	
7	Latitude of spill location *	
8	Longitude of spill location *	
9	County	Napa
10	Regional Water Quality Control Board	Region 2 - San Francisco Bay
11	Spill location description: (Use attachment if location description is more than 2000 charaters)	
12	Number of apperance points *	
13	Spill appearance point *	Combined sewer D.I. (combined CS only) | Force main | Gravity Mainline | Inside Building or Structure | Lateral Clean Out (private) | Lateral Clean Out (public) |Lower Later (private) | Lower Lateral (public) | Upper Lateral (private) | Upper Lateral (public) | Manhole | Other sewer system structure (explain below) | Pump station
14	Spill appearance point explained for "other"	
15	Final spill destination *	Beach | Building or structure | Combined storm drain (combined CS only) | Drainage Channel | Paved Surface | Separate storm drain | Street/curb and gutter | Surface water | Unpaved surface | Other (specify below)
16	Explanation of final spill destination: (Required if final spill destination is "Other")	
17	Estimated spill start date/time *	_____ /_____ / 20_____ | _____:_____ AM/PM
18	Date and time sanitary sewer system agency was notified of or discovered spill *	_____ /_____ / 20_____ | _____:_____ AM/PM
19	Estimated Operator arrival date/time *	_____ /_____ / 20_____ | _____:_____ AM/PM
20	Estimated spill end date/time *	_____ /_____ / 20_____ | _____:_____ AM/PM

City of St. Helena
Office of the Director of Public Works
1480n Main Street } St. Helena, CA } 94574
Phone: 707.968.2658 | Fax: 707.967.2806
www.cityofsthelena.org

SSO Event Report

No.	Question	Multiple Choice Response Circle One (if blank provide written response)
21	Spill cause *	Air Relief Value (ARV)/Blow-Off Valve (BOV) Failure | Construction Diversion Failure | CS Maintenance Caused Spill/Damage | Other (specify below) Damage by other not related to CS Construction/Maintannce (specify below) | Debris from Construction | Debris from Lateral | Debris-General | Debris-Rags | Flow exceeded capacity (Separate CS only) | Grease deposition (FOG) | Inappropriate Discharge to CS | Nautral Disaster | Non-Dispersables | Operator error | Pipe structural problem/failure | Pipe structural problem/failure installation | Pump station failure-controls | Pump station failure-mechanical | Pump station failure-power | Rainfall exceeded design (separate CS only) | Roof intrusion | Siphon Failure | Surcharged pipe (combined CS only) | Vandalism
22	Spill cause explanation: (Required if spill Cause is "Other")	
23	Where did failure occur? *	Air Relief Valve (ARV)/Blow-Off Valve (BOV) | Force Main | Gravity Mainline | Lower Later (public) | Mainhole | Upper lateral | Main | Lower Lateral | Other (specify below) | Pump station failure-controls | Pump station failure-mechanical | Pump station failure-power |Siphon | Upper Lateral (private)
24	Explanation of Where Failure Occurred: (Required if Where Failure Occurred is "Other") *	
25	Was the spill associated with a storm event? *	Yes | No
26	Diameter of sewer pipe at the point of blockage or spill cause (if applicable)	inches
27	Material of sewer pipe at the point of blockage or spill cause (if applicable)	
28	Estimated age of sewer pipe at the point of blockage or spill cause (if applicable)	months
29	Explanation of volume estimation methods used: (describe how you developed spill volume estimates for this spill) *	
30	Name and Title (Contact person who can answer specific questions about this SSO) *	Cleaned up (mitigated effects of spill) | Contained all or portion of spill | Inspected sewer using CCTV to determine cause | Restored flow | Returned all or portion of spill to sanitary sewer system | Other (specify below)
30b	Contact Person Phone Number *	

February 2014

CITY OF ST. HELENA

Sanitary Sewer Overflow Water Quality Monitoring Plan

Table of Contents

A PROJECT MANAGEMENT 1

A.1 PROJECT ORGANIZATION 1
A.2 BACKGROUND 1

B DATA GENERATION AND ACQUISITION 3

B.1 SAMPLING PROCESS DESIGN 3
B.1.1 Sampling Event Timing 3
B.1.2 Monitoring Site Locations 3
B.2 EQUIPMENT PREPARATION 3
B.2.1 Sampling Containers 4
B.2.2 Field Meter Calibration 4
B.3 WATER QUALITY MONITORING 4
B.3.1 Spill Travel Time 5
B.3.2 Sample Collection Methods 6
B.4 SAMPLE HANDLING AND CUSTODY 7
B.4.1 Sample Bottle Labels 7
B.4.2 Transport 7
B.4.3 Chain of Custody Form 8

C REPORTING 8

List of Tables

Table 1. Project Contact list 1

Table 2. Monitoring Equipment List 3

Table 3. Constituents to be Analyzed, Sample Volume Required, and Sample Type 4

Table 4. Constituent Hold Times and Analytical Methods 7

Table 5. Site Names for Sample Handling 7

Table 6. Analytical Laboratories 8

Table 7. Notification and Reporting Timeline 8

List of Figures

Figure 1. SSO Action Flow Chart 2

List of Appendices

A Field Forms

B Calibration Logs

C Chain of Custody Forms (CoCs)

A PROJECT MANAGEMENT

A.1 PROJECT ORGANIZATION

This monitoring program will be conducted under the direction of the City of St. Helena (the City) with guidance provided by Larry Walker Associates (LWA). Caltest Analytical Laboratory of Napa (Caltest) will serve as the primary laboratory, but alternatives might be used due to logistics and timing. The Project Contact list is provided in **Table 1.**

Table 1. Project Contact List

Name	Role	Agency/Company	Phone Number	Email
Michael Sample	Monitoring Coordinator/Field Crew	City of St. Helena		
Kristine Corneillie	MRP Technical Advisor	LWA	408.261.3996 (o)	krisc@lwa.com
Todd Albertson	Laboratory Project Manager	Caltest	707.258.4000 (o)	todd@caltestlabs.com

A.2 BACKGROUND

In 2006, the State Water Resources Control Board (State Water Board) adopted Statewide General Waste Discharge Requirements for Sanitary Sewer Systems (SSS WDRs), Order No. 2006-0003-DWQ. The Monitoring and Reporting Program (MRP) established monitoring, record keeping, reporting, and public notification requirements. On September 9, 2013, Order No. WQ 2013-0058-EXEC became effective that clarified and expanded requirements of the original MRP and defined new sanitary sewer overflow (SSO) categories. The SSO definitions, as well as the notification, monitoring, and technical reporting requirements are shown in **Figure 1**.

This monitoring plan addresses water quality monitoring requirements for Category 1 SSOs that are greater than or equal to 50,000 gallons. As defined by Order No. WQ 2013-0058-EXEC, the following elements must be included in an SSO Water Quality Monitoring Plan to comply with subsection D.7(v) of the SSS WDRs:

1. Protocols for water quality monitoring.
2. Account for spill travel time in the surface water and scenarios where monitoring may not be possible (e.g. safety, access restrictions, etc.).
3. Water quality monitoring analyses for ammonia and bacterial indicators to be performed by an accredited or certified laboratory.
4. Procedures for proper maintenance and calibration of monitoring instruments and devices used to implement the SSO Water Quality Monitoring Program and documentation of maintenance and calibration, as necessary, to ensure their continued accuracy.
5. Water quality sampling within 48 hours of the City becoming aware of the SSO, for, at a minimum, the following constituents:
    a. Ammonia
    b. Total Coliform

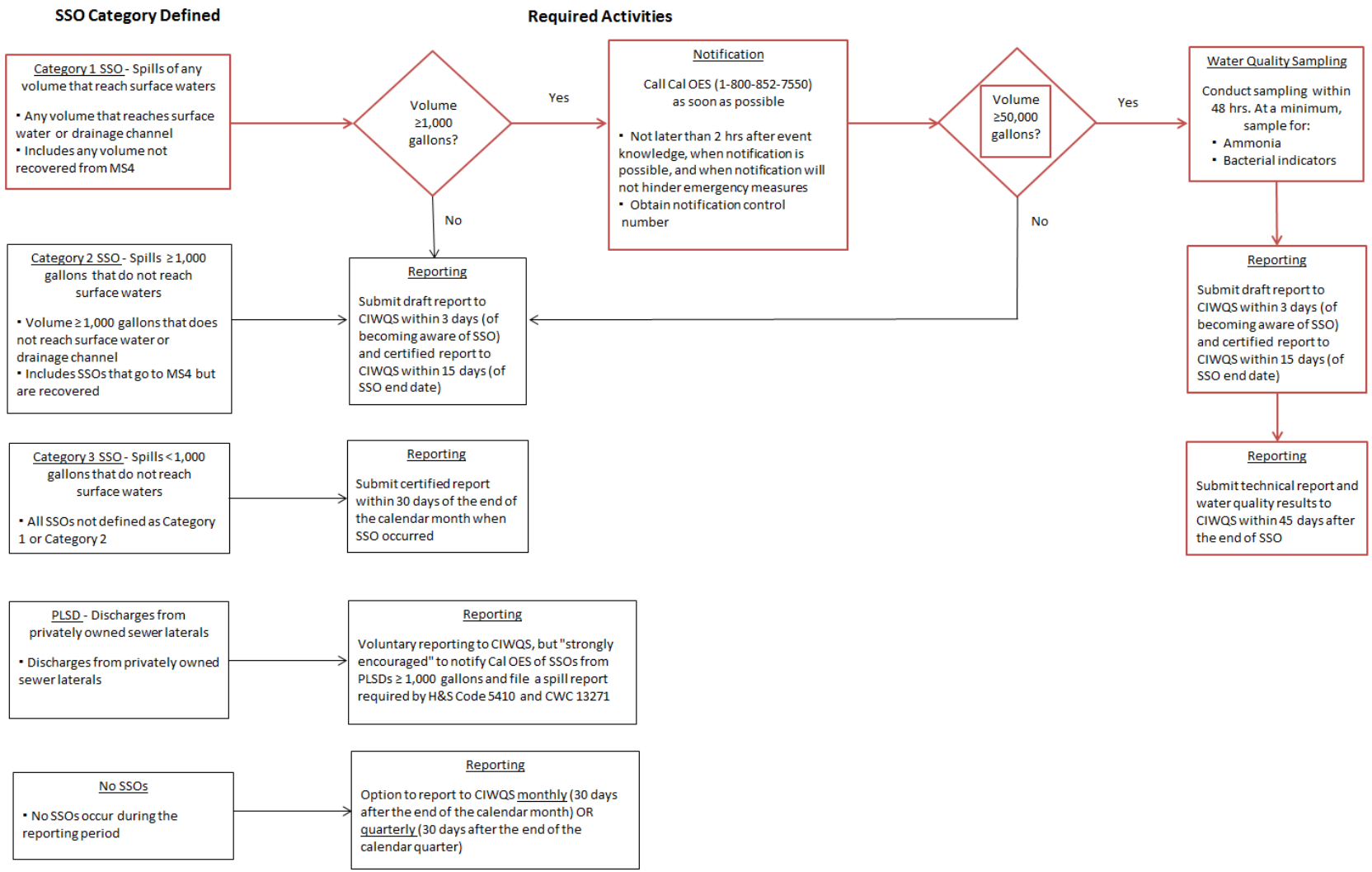

Figure 1. SSO Action Flow Chart (Based on Order No. WQ 2013-0058-EXEC)

B DATA GENERATION AND ACQUISITION

B.1 SAMPLING PROCESS DESIGN

B.1.1 Sampling Event Timing

The Monitoring Coordinator will determine when the field crew will be mobilized to sample the receiving water. Sampling must be conducted within 48 hours after initial Category 1 SSO and spill volume notification. The monitoring coordinator will target daylight sampling within the first 24 hours of the SSO notification, but sample timing may be shifted due to safety and logistical issues.

Sampling will not be conducted if there are any concerns regarding field crew safety. These concerns may include heavy rain events, which compromise access points through flooding and swift currents. Thunderstorms will also be avoided when lightning is occurring. Sampling will only be conducted if there are at least two members of the field crew team available.

B.1.2 Monitoring Site Locations

Upon notice of a Category 1 SSO, the Monitoring Coordinator will determine where the field crew will sample. The Monitoring Coordinator will be responsible for determining the sampling locations. At a minimum, sampling will occur where the SSO enters the surface water body, 100 feet upstream of the entry point, and at least one point downstream of the entry point. The downstream location(s) will be determined from visual monitoring and estimated spill travel time (see Section B.3.1). The Monitoring Coordinator will provide a detailed description of potential monitoring site locations to the Field Crew.

Upon arrival at the monitoring sites, the Field Crew will determine the best locations to sample by assessing the hydrology of the receiving water and any safety precautions. The Field Crew should look for locations where the receiving water can easily be entered or sampled mid-channel by a grab pole. Once the sampling site location is selected, but before sampling starts, the Field Crew will record the latitude and longitude of the sampling location into the Field Form (**APPENDIX A**).

B.2 EQUIPMENT PREPARATION

The Field Crew shall maintain a sampling kit with the necessary supplies to conduct a monitoring event. **Table 2** lists the equipment and supplies that will be included in the sampling kit.

Table 2. Monitoring Equipment List

Storm Kit
Spare batteries for field meter (6)
Spare sample labels
Pencils (2) and waterproof pens/markers (2)
Diagonal clippers
Electrical tape
Cable ties (assorted sizes)
Utility knife
Zip-lock baggies (assorted sizes)
Powder-free nitrile gloves
Rubber bands, heavy duty
Camera

Duct tape
GPS Device
Camera
SSO Water Quality Monitoring Plan
Log books/ Field forms
Chain-of-custody forms
New sample bottles
Intermediate containers
Flow meters
Coolers and ice
Cellular phone
Any necessary safety gear
Grab pole
Umbrella
Paper towels
Trash bags

B.2.1 Sampling Containers

The Field Crew will maintain a supply of sampling bottles for at least 4 events. The Field Crew will order bottles directly from the laboratory and will reorder bottles if they are unused for six months. **Table 3** includes the required bottle types, sample volumes, and preservatives for ammonia and total coliform samples.

Table 3. Constituents to be Analyzed, Sample Volume Required, and Sample Type

Constituent	Optimum Vol. (L)	Min. Vol. (L)	Collection Method	Bottle Type	Preservation	Analytical Lab
Ammonia (NH_3)	0.500	0.100	Direct Fill	500mL Plastic	H_2SO_4, <6° C	Caltest
Total Coliform	0.100	0.100	Direct Fill	100mL Sterile Plastic	<6° C	Caltest

B.2.2 Field Meter Calibration

All field meters will be properly calibrated and maintained by the Field Crew. Calibrations will be performed according to the methods and frequency recommended by the equipment manufacturer. When calibrating the instruments, the Field Crew will document all pertinent information in a Calibration Log (**APPENDIX B**) and keep it with the rest of the project documentation.

B.3 WATER QUALITY MONITORING

The Field Crew will be responsible for the following tasks upon arrival at the monitoring location:

1. Determine best sampling locations and record latitude and longitude readings for the upstream, SSO entry point, and downstream sampling sites.

2. Calculate spill travel time at the downstream monitoring site.

3. Collect water quality samples in the following order: first at the SSO entry point, second at the downstream site(s), and third at the upstream monitoring site.

4. Complete all field forms and prepare the samples for delivery to the laboratory.

The following sections outline the necessary steps the Field Crew must take when performing the above actions.

B.3.1 Spill Travel Time

When the Field Crew arrives at the downstream monitoring site, they will estimate spill travel time by calculating travel time within enclosed storm drains (distance traveled/initial spill rate) and within open surface waters. Travel time within the open surface waters can be determined two different ways depending on the accessibility and safety of the monitoring site.

B.3.1.1 Velocity Probe

Using a velocity probe is the preferred method of spill travel time calculation, but it requires extra safety precautions, since the Field Crew will have to wade and cross the surface water body.

1. The Field Crew must first ensure that the receiving water body is flowing at a safe rate and its span can be crossed by wading.

2. One Field Crew member will be responsible for using the velocity probe and the other will stand on the shore and record the readings.

3. The Field Crew member with the velocity probe will enter the surface water at the shore and begin to take a velocity measurement, roughly six inches below the surface. The Field Crew member will wait for the reading to stabilize before reporting the value to the recording Field Crew member.

4. The Field Crew member will then move the velocity probe two feet further into the surface water body and make another measurement. This will continue until the entire span of the receiving water body has been measured.

5. The Field Crew will not cross into any unsafe portions of the receiving water body and will note on the Field Form if the measurements are only for a portion of the channel.

B.3.1.2 Visual Velocity Estimation

If the receiving water body is unsafe to enter, the velocity can be measured by observing floating debris.

1. The Field Crew members will stand on the edge of the channel, 30 feet apart.

2. The Field Crew member standing upstream will indicate when a large piece of debris passes their point. At this time the Field Crew member standing downstream will start timing.

3. Once the same piece of debris passes the downstream Field Crew member, they will stop timing and calculating the velocity (ft/sec) by dividing 30 feet by the number of seconds it took for the debris to travel that length.

If there isn't any large debris floating in the surface water, the upstream Field Crew member can use a nearby stick or other buoyant object.

B.3.2 Sample Collection Methods

Sample collection methods will vary depending on the surface water and the safety of the Field Crew. Clean, powder-free, nitrile gloves will be worn for all bottle handling. The direct fill sample collection method is the preferred sampling method, since it does not use an intermediate container. In cases where the direct fill method cannot be used due to accessibility or safety an intermediate bottle and a grab pole can be used.

B.3.2.1 Direct Fill Sample Collection

The direct fill sample collection method will be used in cases where the surface water can be entered safely by the Field Crew. Field Crew will wear waders and ensure that the water level and velocity of the surface water are low enough to provide a safe entry and sampling environment.

Ammonia and bacteriological sample bottles will be filled by direct submersion to approximately mid-depth as follows.

1. Wade to approximately the area of the water body with the highest flow rate and face upstream. This will most likely be midstream, but can be in a different portion of the stream, depending on the hydrology.
2. Submerge the sample bottle with its cap on to approximately mid-depth at a location of significant flow (avoid stagnant water). Hold the bottle upright under the surface while it is still capped.
3. Open the lid carefully just a little to let water run in. Fill the bottle and screw the cap tightly while the bottle is still underneath the surface.
4. Remove bottle from stream and place on ice.

B.3.2.2 Intermediate Container Sample Collection

If the flow, water level and/or access point are deemed unsafe then an intermediate bottle attached to a grab pole will be used for sample collection. A clean, new intermediate bottle will be used for each sampling event and sampling site.

Ammonia and bacteriological sample bottles will be filled by intermediate container sample collection as follows:

1. Attach the intermediate bottle to an expandable pole using tape or cable ties and remove lid.
2. Submerge the intermediate bottle, attached to expandable pole, to approximately mid-depth at a location of significant flow (avoid stagnant water).
3. Remove bottle from water and empty contents. Repeat this twice more.
4. Once the intermediate bottle is properly rinsed, return it to approximately mid-depth at a location of significant flow (avoid stagnant water).
5. Using the intermediate bottle, fill the bacteriological sample container and then the ammonia bottle. Ensure that neither bottle overflows and that the preservative stays in the sample container.
6. After bottle fills, replace bottle lid, remove bottle from pole, and place on ice.

B.4 SAMPLE HANDLING AND CUSTODY

The Field Crew will ensure that all samples are collected and submitted to their respective labs by the maximum hold times listed in **Table 4**. If timing or logistics prevent a hold time being met, the Field Crew will contact the Monitoring Coordinator.

Table 4. Constituent Hold Times and Analytical Methods

Constituent	Analytical Method[1]	Maximum Hold Times	Analytical Lab
Ammonia (NH_3)	SM 4500-NH3-G	28 days	Caltest
Total Coliform	SM 9221-B/E	6 hours	Caltest

B.4.1 Sample Bottle Labels

The Field Crew will label all sample bottles with a waterproof label, which will contain the agency name, sample collection date, analyte, analysis method, station number and name and Field Crew names. The analytes and analysis methods are shown in **Table 4** and the station identification protocols are shown in **Table 5**.

Table 5. Site Names for Sample Handling

Station Number	Station Name
US-001	Surface Water Upstream
ENTRY	Surface Water Point of Entry
DS-001	Surface Water Downstream 1
DS-XXX[1]	Surface Water Downstream XXX[1]

1 Additional downstream monitoring sites will be labeled in sequential order starting from the SSO surface water point of entry.

Example sample bottle label:

Direct Fill Sample Bottle Label

City of St. Helena

Station Number - ____

Analyte – Analysis Method _____

Date & Time:_____ Collected by:_____

B.4.2 Transport

All samples will be kept on ice from the time of collection to the time of receipt by laboratory personnel. It is imperative that all samples be analyzed within maximum holding times (see **Table 4**). Samples will be shipped/delivered as specified in **Table 6**.

Table 6. Analytical Laboratories

Analytical Laboratory	Analysis	Shipping Method
Caltest Attn. Todd Albertson 1885 North Kelly Road Napa, CA 94558 707.258.4000	Ammonia and bacterial	Hand delivered/courier

B.4.3 Chain of Custody Form

Chain-of-Custody (CoC) forms will be filled out by the Field Crew for all samples submitted to the laboratories. CoCs will contain the following information:

- Sampler name
- Address (where the results will be sent)
- To whom the laboratory results are being sent
- Sample collection date and time
- Sample location
- Analysis method requested
- Sample container type and number
- Comments/special instructions
- Samples relinquished by (signature, print name, date)
- Samples received by (signature, print name, date)

An electronic data deliverable will be requested for all sample reports. Example lab specific CoCs are included in **APPENDIX C.**

C REPORTING

A Category 1 SSO in which 50,000 gallons or greater are spilled to a surface water requires multiple stages of notification and reporting. The City will adhere to the required timeline outlined in **Table 7**, which begins when the City becomes aware of an SSO. The specific requirements for notification and reporting are specified by Order No. WQ-2013-0058-EXEC and detailed in the City's Sanitary Sewer Management Plan.

Table 7. Notification and Reporting Timeline

Time Period	Requirement
<2 Hours	Notification to CalOES
Within Three Business Days	Draft Category 1 SSO Report to CIWQS
Within 15 Calendar Days	Certified Category 1 SSO Report to CIWQS
Within 45 Calendar Days	SSO Technical Report with water quality results to CIWQS

Appendix A

Field Forms

SSO Water Quality Monitoring Plan Field Log		
General Information		
Event ID:	Date:	SSO Time:
Sampling Personnel:		
SSO Description		
Time of Notification:	Size:	Location:
Weather (fog, rain, wind, etc):		
Total precipitation during previous 5 days:		
Monitoring Sites		
US-001		
Arrival Time:	Departure Time:	
GPS Coordinates	Latitude:	Longitude:
Sample Location	☐ Mid-Channel	☐ Bank
Sample Time:	Total Coliform:	Ammonia:
Floating Material or Debris:		
Water Color/Turbidity:		
Odor:		
POINT of ENTRY		
Arrival Time:	Departure Time:	
GPS Coordinates	Latitude:	Longitude:
Sample Location	☐ Mid-Channel	☐ Bank
Sample Time:	Total Coliform:	Ammonia:
Floating Material or Debris:		
Water Color/Turbidity/Odor:		
Estimated Spill Travel Time to Monitoring Site:		
DS-001		
Arrival Time:	Departure Time:	
GPS Coordinates	Latitude:	Longitude:
Sample Location	☐ Mid-Channel	☐ Bank
Sample Time:	Total Coliform:	Ammonia:
Floating Material or Debris:		
Water Color/Turbidity/Odor:		
Estimated Spill Travel Time to Monitoring Site:		
Page __ of ___		

SSO Monitoring Plan Field Log (Additional Downstream Sites)		
DS-____		
Arrival Time:	Departure Time:	
GPS Coordinates	Latitude:	Longitude:
Sample Location	☐ Mid-Channel	☐ Bank
Sample Time:	Total Coliform:	Ammonia:
Floating Material or Debris:		
Water Color/Turbidity/Odor:		
Estimated Spill Travel Time to Monitoring Site:		
DS-____		
Arrival Time:	Departure Time:	
GPS Coordinates	Latitude:	Longitude:
Sample Location	☐ Mid-Channel	☐ Bank
Sample Time:	Total Coliform:	Ammonia:
Floating Material or Debris:		
Water Color/Turbidity/Odor:		
Estimated Spill Travel Time to Monitoring Site:		
DS-____		
Arrival Time:	Departure Time:	
GPS Coordinates	Latitude:	Longitude:
Sample Location	☐ Mid-Channel	☐ Bank
Sample Time:	Total Coliform:	Ammonia:
Floating Material or Debris:		
Water Color/Turbidity/Odor:		
Estimated Spill Travel Time to Monitoring Site:		
DS-____		
Arrival Time:	Departure Time:	
GPS Coordinates	Latitude:	Longitude:
Sample Location	☐ Mid-Channel	☐ Bank
Sample Time:	Total Coliform:	Ammonia:
Floating Material or Debris:		
Water Color/Turbidity/Odor:		
Estimated Spill Travel Time to Monitoring Site:		
Page __ of ___		

Appendix B

Calibration and Maintenance Logs

Calibration and Maintenance Log

Instrument Model	Type of Calibration or Maintenance	Date of Calibration or Maintenance

Appendix C

Chain of Custody Forms (CoCs)

Caltest
ANALYTICAL LABORATORY

1885 N. KELLY ROAD NAPA, CA 94558 (707) 258-4000 FAX (707) 226-1001

PAGE ____ OF ____

SAMPLE CHAIN OF CUSTODY

PROJECT NAME / PROJECT NUMBER:

P.O. NUMBER

LAB ORDER #

CLIENT: Town of Yountville

REPORT ATTN:

MAILING ADDRESS:

STATE:

ZIP

BILLING ADDRESS:

ATTN:

PHONE NUMBER:

FAX PHONE NUMBER:

SAMPLER (PRINT & SIGN NAME):

ANALYSES REQUESTED

TURN-AROUND TIME

[X] STANDARD

[ ] RUSH

DUE DATE:

CALTEST LAB #	DATE SAMPLED	TIME SAMPLED	SAMPLE MATRIX*	CONTAINER TYPE/ AMOUNT**	PRESERVATIVE	SAMPLE IDENTIFICATION / SITE	CLIENT LAB #	COMP. or GRAB	Ammonia	Total Coliform									REMARKS
				1-500mL HDPE	H2SO4	US-001			X										
				100mL	None	US-001				X									*** 6 hour holding time!
				1-500mL HDPE	H2SO4	ENTRY			X										
				100mL	None	ENTRY				X									*** 6 hour holding time!
				1-500mL HDPE	H2SO4	DS-001			X										
				100mL	None	DS-001				X									*** 6 hour holding time!

RELINQUISHED BY	DATE/TIME	RECEIVED BY	RELINQUISHED BY	DATE/TIME	RECEIVED BY
	/			/	
	/			/	

FOR LAB USE ONLY

Samples: WC ____ MICRO ____ BIO ____ AA ____ SV ____ VOA ____ pH? Y/N TEMP: SEALED: Y/N INTACT: Y/N

BD: BIO ____ WC ____ AA ____

CC: AA ____ SV ____ VOA ____

SIL: HP ____ PT ____ QT ____ VOA ____

W/HNO_3 ____ H_2SO_4 ____ NaOH ____

PIL: HNO_3 H_2SO_4 NaOH HCL

COMMENTS:

*MATRIX: AQ = Aqueous Nondrinking Water, Digested Metals; FE = Low R.L.s, Aqueous Nondrinking Water, Digested Metals; DW = Drinking Water; SL = Soil Sludge, Solid ; FP = Free

**CONTAINER TYPES: AL = Amber Liter; AHL = 500 ml Amber; PT = Pint (Plastic); QT = Quart (Plastic); HG = Half Gallon (Plastic); SJ = Soil Jar; B4 = 4oz. BACT; BT = Brass Tube; VOA = 40mL VOA; OTC - Other Type Container

R PR M F

WHITE - LABORATORY YELLOW - CLIENT COPY TO ACCOMPANY FINAL REPORT PINK - CLIENT COPY AS RECEIPT

SSO and Backup Response Plan

Field Guide

City of St. Helena

Sanitary Sewer Overflow and Backup Response Plan

Field Guide

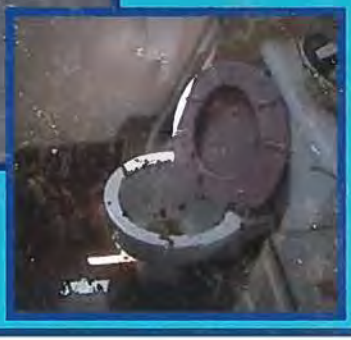

Prepared by David Patzer, DKF Solutions Group
707.373.9709 losscontrol@sbcglobal.net
Copyright © 2004-2008

Sanitary Sewer Overflow and Backup Response Plan

© COPYRIGHT 2004-2009
DKF Solutions Group
All rights reserved.

All material contained in this program is protected and may not be reproduced without the express, written consent of DKF Solutions Group. This program, including procedures, forms and letters was created by DKF Solutions Group (except where otherwise cited) and may not be shared, loaned or otherwise given, in part or in whole, to any entity, company or organization except regulatory agencies, without the express, written consent of DKF Solutions Group. DKF Solutions Group and the Agency indicated on the cover page are the only authorized entities allowed to alter or reproduce this document for the Agency's internal use.

In the development of this program, a concerted professional effort was made to ensure the accuracy of the contents; however, no warranty is express or implied. This program should not be regarded as a substitute for the advice and counsel of an attorney.

For any questions regarding the copyright or contents of this program, contact DKF Solutions Group at 707.373.9709 or at losscontrol@sbcglobal.net.

Table of Contents

Customer Relations Practices Following a Sewer Backup FG-1

Line Clearing SOPs
- How To Use a Hydroflusher FG-2.1
- How To Use a Continuous Rodder ..... -2.2

Containment Procedures FG-3

Flow Volume Estimation Procedures
- Contained Volume FG-4.1
- Contained in Roadway Gutter ..... -4.2
- Counting Upstream Connections ..... -4.3

Bypass Pump Selection Tables
- 0-25 Feet Total Lift FG-5.1
- 25-50 Feet Total Lift ..... -5.2

Determining Overflow Rates From a Manhole
- Flow From a Manhole Picture Matching FG-6.1
- Flow From a Manhole With Cover in Place Tables ..... -6.2
- Flow From a Manhole With Cover Removed Tables ..... -6.3
- Flow From a Manhole Pick Hole Tables ..... -6.4

Sewer Overflow Response Tactics Guide FG-7

Customer Relations Practices Following a Sewer Backup

It is important for employees to communicate effectively with customers, especially in sewage overflow and backup situations. How we communicate - on the phone, in writing, or in person -is how we are perceived. Good communication with the homeowner results in greater confidence in our ability to address the problem satisfactorily, less chance of having the homeowner prolong the claims process, and less chance of him/her exaggerating the damage done to their property.

As a representative of your agency, you will occasionally have to deal with an angry homeowner. A sewer backup is a stressful event and even a reasonable homeowner can become upset should he/she perceive us as being indifferent, uncaring, unresponsive, or incompetent.

Although sometimes difficult, effective management of a sewage backup situation is critical. If it is not managed well, the situation can end up in a costly prolonged process with the homeowner. We want the homeowner to feel assured that we are responsive and the homeowner's best interest is a top priority.

A Few Communication Tips

1. Give the homeowner ample time to explain the situation or to vent. Show interest in what the homeowner has to say, no matter how many times you have heard it before, or how well you understand the problem.
2. As soon as possible, let the customer know that you will determine if the source of the sewer backup is in the public sewer and, if it is, will have it corrected as quickly as you can.
3. Acknowledge the homeowner's concerns. For example, if the homeowner seems angry or worried about property damage, say something like, "I understand you're concerned about the possible damage to your property, but a professional cleanup crew can restore the area, and if it is determined that the agency is at fault, the property owner has the right to file a claim for any reasonable repairs or losses resulting from this incident."
4. Express understanding and empathy for any inconveniences caused by the incident, but do not admit fault.
5. As much as possible, keep the homeowner informed on what is being done and will be done to correct the problem.
6. Keep focused on getting the job done in a very professional manner. Focus on the problem without unnecessary small talk with the homeowner.
7. Don't find fault or lay blame on anyone.

How to Use a Hydroflusher to Clear a Line Blockage

Overview

Procedures for opening and cleaning a blocked municipal sewer line with a high-velocity waterjet. Individual situations may be unique, but use these basic procedures for any jetting project.

Best tools: High-velocity flushing trucks. The jet may be a combination machine or a truck- or trailer-mounted jetter.

Types of municipal sewer systems:

- **Sanitary sewers** carry waste from homes and businesses to a municipal wastewater treatment plant
- **Storm sewers** carry stormwater runoff to streams and rivers. Storm sewers carry heavier waste (sand, silt and gravel) than sanitary sewers.

The size of the pipe and the type of sewer dictate cleaning procedures.

Safety

- **Wear necessary PPE**: Eye protection, coveralls, hardhat, work boots and work gloves.
- Follow the **CalTrans** (*MUTCD*) **Traffic Control Manual** and be aware of manhole hazards.
- Follow all **OSHA rules** when entering confined spaces (manholes)
- **Proper tools for manhole lid removal:** Gas tech, manhole lifter and traffic control
- **Never enter a manhole (confined-space) with the line under pressure because of the possibility of drowning or personal injury.**

Professional Standards

- Follow all safety rules
- Always consider every option available to hydroflush a municipal sewer system in a safe and cost effective manner.
- Ensure that the residents and businesses within the work area or jurisdiction do not experience problems due to high pressure back ups or damage.
- Effectively clean the sewer mains by incorporating these standard procedures of maintenance, experience, training and available tools to complete required day-to-day operations.

Locating the Blockage

STEP 1

- Determine the direction of flow in the system. Wastewater flows downhill in a gravity-based sewer.
- Use a sewer map and/or your familiarity with the area to identify the direction of flow, OR remove a manhole lid and look into the invert.

STEP 2

- Keep moving to the nearest downstream manhole until the blockage is located. A manhole filled with wastewater or with a flow line above the sewer shelf is typically the problem area.
- A full manhole means water and debris have entered the manhole, but because of a blockage downstream cannot drain away.
- The blockage is normally between the first empty manhole (downstream) and the first full manhole (upstream).

Setting up the Hydroflusher

STEP 1

- Position the vehicle/sewer-cleaning equipment at nearest downstream manhole below the stoppage on the side nearer the blockage.
- On steep lines where the downstream manholes are less than 5 feet deep, necessary precautions to prevent secondary overflows at downstream manholes must be taken. Form a containment barricade near the downstream manhole with use of sandbags, etc.

STEP 2

- Position the water jet over the 1st empty manhole downstream of the blockage

STEP 3

- If not already attached, attach 20'-25' of leader hose (*a hose of a different color*) to the regular hose – this serves as a benchmark for insertion & retrieval (*NOTE: A leader hose helps prevent the hose from exiting the pipe prematurely & causing injury!*)

  ***DO NOT** use the alternative method of marking the jet hose five feet from the end!*

STEP 4

- Select a PENETRATING forward jet nozzle with a small angle (*i.e. 15-degrees*) for blockages.

STEP 5

- Install a nozzle extension between the end of the hose & the nozzle to prevent the nozzle and hose from turning up a service lateral causing damage.

STEP 6

- Lower the hose, nozzle extension & nozzle into the manhole & into the pipe invert
- Insert the jet hose through the Tiger Tail & tie the device in place to stabilize it. *Note: failure to use a Tiger Tail or Roller Guide may result in the hose being damaged while flushing the main!*

STEP 7

- Set up a vacuum truck/trailer or have a catcher available to completely capture and remove the debris to avoid future stoppages.

This is a must when breaking mainline stoppages and proper maintenance procedures!

Hydroflushing

STEP 1

- Ensure that the hose, the nozzle extension and nozzle are inserted into the pipe completely and the hose is protected by a hose guide device (*i.e. Tiger Tail*).
- Run the line with just enough pressure to reach the blockage. When you reach the blockage, the hose should stop.

STEP 2

- Begin hydro flushing. Adjust water pressure as needed, but do not exceed 2500psi.
- Clean the sewer from the lower end to the higher end of the flow so that when the hose is retrieved, it works with the downward grade of the pipe and allows for more efficient cleaning of remaining debris.

NOTE: In sewer lines where toilets have bubbled or overflowed due to high pressure back flushing, a lower pressure must be used to prevent additional backups

STEP 3

- If the hose does not advance, pull back on it and then let go (*Be careful not to strain your back!*). Repeat the steps until the hose breaks through the blockage.

STEP 4

- If the hose breaks through and the line is still plugged, run the hose until you hit another plug, then repeat the steps again.

STEP 5

- Clear the blockage by working from the lower end to the higher end of the flow.
- Pull the hose back in a slow continuous speed to ensure that the line is being cleaned sufficiently. Bringing the hose back to fast will leave the pipe with areas not cleaned, which is an unacceptable level of cleaning.

***NOTE**: Always jet the line a few feet at a time, returning the debris to the manhole – completely remove debris so further blockages are not created downstream! Pulling heavy debris is time-consuming and laborious, and if not done properly can cause the hose and nozzle to be buried and stuck. Then you may need to dig up the sewer.*

- The debris is pulled to the manhole by the water flow and the returning hose and nozzle. Allow the hose to enter slowly on the initial passes and pull the hose and nozzle back occasionally to prevent them from exiting a defective pipe or becoming buried in debris.
- Remove the debris using the vacuum portion of the combination truck, or a debris removal hand tool. Anytime you hydro flush a sewer, **remove** the debris completely to avoid future stoppages. If this can't be done, then drag the debris into a high flow trunk main to prevent a stoppage from occurring downstream.
- Always look into the bottom of the manhole for the amount and type of debris being pulled from the pipe to determine the number of passes and the length of the passes needed to clean the sewer effectively.

STEP 6

Once you hear or see the rush of the water, turn off the pressure until the water level drops in the line. Once the flow is back to normal, run the hose up to the next manhole to insure that the line is free of all blockages, then pull the hose back. Check the upstream manholes to make sure the line is running.

STEP 7

Always rewind the jet hose with the water pressure on to avoid flattening the hose.

NOTE: Always turn down the water pressure once you see the leader hose – Run hose until spray from the nozzle fills the pipe, then shut down the water. Shutting the water down prematurely will lave material at/or upstream from the manhole causing another blockage in a very short time.

How to Use a Continuous Rodder

General Safety Guidelines

- Know your equipment: never operate the rodder in excess of it's rated capacity, speed, pressure and temperature
- Take your time: Trying to move too fast or trying to force a blockage can be disastrous
- Inspect equipment before AND after every job: check the condition of the rod, guides, engine and assemblies
- Wear the required PPE including gloves at all times when operating the rodding equipment
- Be aware of working near confined spaces:
  - Always suspect gas and test for it
  - Never smoke around a manhole
  - Never open a manhole while standing over it
  - Give the opening time to ventilate before beginning work
- Never touch the rod when it's rotating and never rotate the rod until everyone is clear
- Be aware of contamination hazards
- Use proper traffic safety procedures when setting up on the street
- Do not enter the manhole to change tools
- Never grasp the rod or coupling with your hands until all torque is relieved.

Setting up the Rodder

STEP 1 Start the rodder unit and let it warm up

STEP 2 Run out the rod until a coupling is between the guide hose and the end of the machine

STEP 3 Insert a length of cut rod through the open center hole of the coupling. DO NOT TOUCH ROD CONTROL LEVERS DURING THIS STEP

STEP 4 Turn the pressure relief valve counter clockwise until it stops

STEP 5 Depress the lateral control lever to retrieve rod into the drive head assembly

STEP 6 Keeping the lever depressed, slowly turn the pressure relief valve clockwise until the rod moves into the machine and is stopped by the rod through the coupling

STEP 7 Holding the lever down, slowly turn the valve clockwise to increase the pressure. Watch the hydraulic oil pressure gauge on the control panel. Stop increasing the pressure when the needle reads 300 to 350 pounds (should be 350 pounds for robotic rodders). Pressure is now set for manual machines. Remove the rod from the coupling and begin work. Secure the lock ring to retain setting. For robotic rodders, continue to Step 8.

(Setting up the Rodder continued)

Continue for Robotic Rodders Only

STEP 8

Set the manual pressure to 350 pounds using the above procedures. Reverse the rod travel and send the rod into the guide hose until the rod through the coupling hits the opening of the guide hose.

STEP 9

Leave the lateral control lever locked in the forward position and open the Robotic control box. Set the robotic pressure gauge to about 600 pounds

STEP 10

Flip the MODE switch to automatic and slowly turn the robotic pressure valve counter clockwise until the system activates. Note where on the valve this happens and then dial it down to the next mark. This ensures that the pressure is not too close to the manual or primary system.

STEP 11

The robotic system should now be set up for operation. NOTE: pressures may have to be adjusted periodically when working with heavy materials or on long runs.

Rod Guide Hose Set Up

STEP 1 Place the bell end approximately four to six inches inside the pipe to be cleaned.

STEP 2 Place the lower manhole brace so that it hits the barrel wall of the manhole at approximately a 35° to 45° angle. This will keep the bell end from creeping back up the manhole

STEP 3 Pull the rodder forward to remove all slack from the guide hose.

STEP 4 Confirm that the rod guide hose has a smooth and low-angled entry into the manhole.

Avoid bends in the rod guide hose. Bends force the rod to turn while bent which generates heat which weakens the rod.

Without the manhole brace, the bell end of the hose can creep back into the manhole creating a severe bend.

Controlling Rod Torque

Productive Torque: The force needed to cut into and remove heavy roots and other debris. It can be seen as a gentle flexing of the rod—twisted up to 90 degrees.

Excessive Torque: Develops when the tool is not pulled away from the material it is bound in. It can result in rod damage and downtime in the field. It can be seen as rods twisting past 180 degrees, making the guide hose twist slowing down the reel and making the engine work too hard.

Testing for Rod Damage: Stretch 50-100 feet of rod out on a flat surface. Damaged rods will appear twisted, won't lie flat and bends will be obvious.

CONTROLLING ROD TORQUE IN THE FIELD

1. **Test torque pressure**
   To test the torque pressure: Release the reel spin direction lever to neutral to see if the reel stops quickly or even begins to spin in reverse. If it does, then the tool is lodged and the rod is relieving the torque pressure.

2. **Spin off torque**
   Move the tool a few feet from the obstruction, and allow the tool to spin off excessive torque. Keep the machine rotating so there is less time needed to resume rotation.

3. **Resume rotation**
   Begin rotation again and continue until the material is penetrated.

4. **Monitor**
   Continue to watch for torque building up on the rod. Repeat steps above as necessary.

Grease Removal Techniques

Tools:

Square Bar Corkscrew

Auger

Three-Blade Cutter

1 **Attach auger to rod**

Use an ***Auger*** or ***Square Bar Corkscrew*** auger that is at least one full pipe size smaller than the pipe. Send it up the pipe until it reaches the next manhole.

2 **Make pilot hole**

Turn auger at approximately 20-25 rpm and push slowly to cut away material. Refer to "Controlling Rod Torque" procedure to maintain control of the rod torque. If there is too much resistance, remove the auger and use the next smaller size.

3 **Gaff auger to street**

Relieve the torque from the rod and gaff it up to the street.

4 **Attach larger auger**

Attach a larger auger to the rod.

Use the next size auger if there was heavy resistance on the first pull. Use a pipe-sized auger if there was little resistance.

Continue

(Grease Removal Techniques continued)

5 **Make another pass**

Lower the auger into the manhole. Rotate the rod AFTER the tool is safely inside the pipe. Use the same slow rotation (rpm) and speed as on the previous pass. Refer to "Controlling Rod Torque" procedure to maintain control of the torque.

6 **Make a third pass**

When the auger returns to the machine, reverse the direction and return it to the remote manhole. Keep the same rpm as the previous pass, but increase the speed slightly.

7 **Repeat as needed**

If a pipe-sized auger was not used on the second pass, increase the auger size and repeat the above procedure until a pipe-sized auger can be pulled through the pipe to the remote manhole.

8 **Attach cutter**

Attach a ***Three-Blade Cutter*** to the rod. Return this tool to the machine maintaining a slow speed, but increasing the rotation to 50-65 rpm. This tool will scour the pipe walls and remove all remaining material.

9 **Remove guide hose**

Remove the guide hose and then the scene according to agency procedures.

Root Removal Techniques

Tools:

Square Bar Corkscrew

Auger

Concave Root Saw

Three-Blade Cutter

1 Attach auger to rod

Use an ***Auger*** or ***Square Bar Corkscrew*** auger that is at least one full pipe size smaller than the pipe. Send it up the pipe until it reaches the next manhole.

2 Make pilot hole

Turn auger at approximately 20-25 rpm and push slowly to cut away material. Refer to "Controlling Rod Torque" procedure to maintain control of the rod torque. If there is too much resistance, remove the auger and use the next smaller size.

3 Gaff auger to street

Relieve the torque from the rod and gaff it up to the street.

4 Attach larger auger

Attach a ***Concave Root Saw*** to the rod.

Use a pipe-sized saw if there was little resistance with the auger. Use a smaller size if there was heavy resistance with the auger.

Continue

(Root Removal Techniques continued)

5 **Back-cut**

Lower the saw into the manhole. Rotate the rod AFTER the tool is safely inside the pipe. Slowly pull the saw back to the machine maintaining a slow speed, but increasing the rotation to 40-55 rpm. Refer to "Controlling Rod Torque" procedure to maintain control of the torque.

6 **Return saw**

When the root saw arrives at the machine, reverse the direction and return it to the remote manhole. Keep the same rpm as the previous pass, but increase the speed slightly. Refer to "Controlling Rod Torque" procedure to maintain control of the torque.

7 **Repeat as needed**

If a pipe-sized root saw was not used, increase the saw size and repeat the above procedure until a pipe-sized saw can be pulled through the pipe to the remote manhole.

8 **Attach cutter**

Attach a ***Three-Blade Cutter*** to the rod. Return this tool to the machine maintaining a slow speed, but increasing the rotation to 50-65 rpm. This tool will scour the pipe walls and remove all remaining material.

9 **Remove guide hose**

Remove the guide hose and then the scene according to agency procedures.

Emergency Stoppage Techniques

These procedures are to be used as a guide when dealing with emergency stoppages. Each situation is unique and may require different set up and operation. Consider access locations, length of pipe section, set up difficulties and traffic when following these basic steps.

Tool:

Square Bar Corkscrew

1 **Locate manhole**

Locate the closest dry manhole downstream from the surcharged manhole. If possible, set up and operate equipment from there.

If forced to work from the surcharged manhole, use extreme caution and make sure the tool is in the invert and the guide hose is properly set. Test the tool before full engagement to make sure it is in the pipe.

2 **Select auger**

The ***Square Bar Corkscrew*** is a good tool for tearing through blockages. Use one that is at least one full size smaller than the blocked pipe.

3 **Clear obstruction**

Push and rotate the tool up the pipe. As obstructions are met, pull back to relieve the torque and then return to the obstruction. Continue until the tool passes the obstruction. There should be a rush of water. If not, then there may be another obstruction further up the pipe.

Continue

(Emergency Stoppage Techniques continued)

4 **Prepare for water**

When the stoppage is cleared, there will be a rush of wastewater and solids. UNDER NO CIRCUMSTANCES SHOULD THERE BE ANYONE IN THE MANHOLE. Lift the guide hose as needed to make sure the bell end is not preventing obstructions from getting by.

5 **Move up the line**

Once the flow has started, move the tool up the line to the next manhole. Dislodge settled debris and allow obstructions to pass. Pull the tool back slowly to the machine to make sure the obstruction is fully punctured and removed.

6 **Return saw**

Clean the pipe section with proper tools for removing any remaining materials. Pipe must be cleaned with pipe-sized tools to make sure the pipe is fully cleared. Refer to agency policy for the timing of this task.

Containment Procedures

Protection of the public's health and a safety is a top priority!

The overflow must be contained. Containment becomes more difficult if the overflow reaches the storm drain system or drainage way since the overflow can rapidly contaminate receiving waters such as creeks, streams, rivers, and other water bodies. During dry weather, the storm drain system can be used to store the overflow if it can be plugged downstream of the overflow or if the downstream storm drain pump station can be deactivated.

Options for containing the overflow

Overflow onto ground

- Rubber mats at catch basin or inlet
- Sand bags in gutter and around catch basin or inlet
- Dig earthen trench or build berm to create pond

Overflow in building

- Evacuate affected people if necessary
- Use sand bags/plastic sheeting if necessary
- Avoid electrical shock - have power turned off if outlets or other energized equipment is sitting in water or is wet

Overflow into storm drain/drainage way

- Trace overflow in storm drainage system to downstream end point
- Plug all affected storm system outlets and coordinate with appropriate personnel for strategy to contain spill
- Turn off storm water pump station

Required equipment for containing overflow

Overflow onto ground and in buildings

- Rubber mats
- Sand bags
- Plastic sheets
- Bypass pumps and pipe/hose
- Vacuum truck

Overflow into storm drain/drainage way

- Plugs
- Bypass pump
- Vacuum truck

Overflow at pump station

- Emergency generator
- Bypass pump

Flow Volume Estimation Procedures: Contained Volume

The volume of some small spills can be estimated using this method if the overflow is contained in one area and if it is not raining. In addition, the shape, dimensions, and depth of the spilled wastewater are needed. The shape and dimensions are used to calculate the area of the spills and the depth is used to calculate the volume.

STEP 1 — Sketch the shape of the contained sewage

STEP 2 — Measure or pace off the dimensions.

STEP 3 — Measure the depth in several locations. Calculate an average depth for the entire area by adding all measured depths together and dividing by the number of measurements taken.

STEP 4 — Convert the dimensions, including depth to feet.

STEP 5 — Calculate the area using the following formulas:

Rectangle	Area = length x width
Circle	Area = diameter x diameter x 0.785
Triangle	Area = base x height x 0.5

STEP 6 — Multiply the area times the depth

STEP 7 — Multiply the volume by 7.48 to convert the volume to cubic feet to gallons

EXAMPLE:

Volume = 100' x 100' x 0.5' x 7.48
Volume = 37,400 gallons

EXAMPLE:

Volume = 100' x 100' x .785 x 0.5' x 7.48
Volume = 29,359 gallons

Flow Volume Estimation Procedures: Contained in a Roadway Gutter

The volume of an overflow contained in a roadway gutter can be estimated by this method:

STEP 1

Measure the length of gutter containing the overflow.

STEP 2

Measure the depth and width of the overflow in the gutter. Refer to the drawing below.

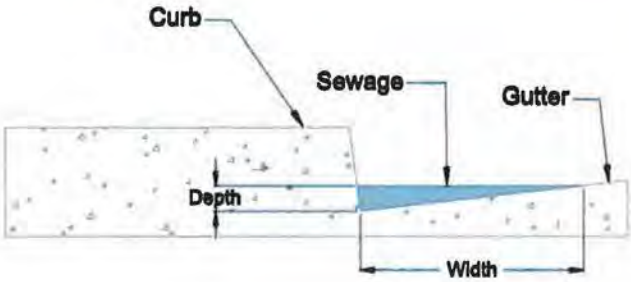

STEP 3

Convert all measurements to feet

STEP 4

Calculate the overflow volume using the following equation:

Volume (gal) = length x width x depth x 3.74

Flow Volume Estimation Procedures: Counting Upstream Connections

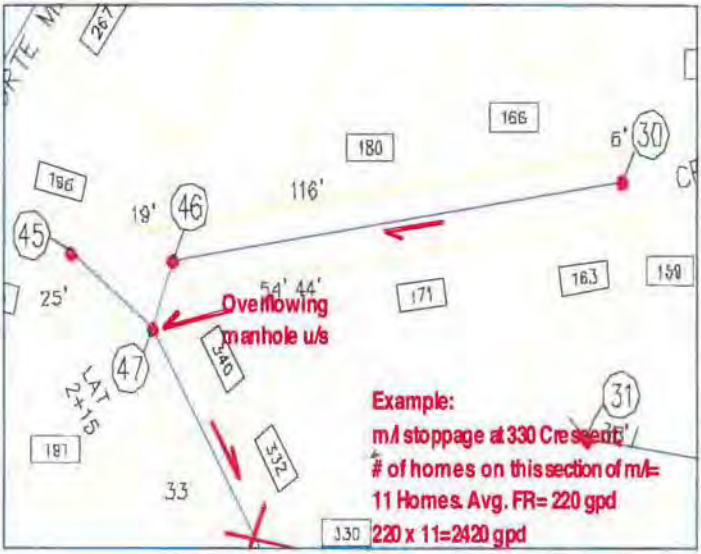

METHOD

1. Count the number of upstream connections.
2. Estimate the time that the overflow has been occurring *(Remember: the overflow was probably flowing before it was reported).*
3. Each residence contributes about 240 gallons per day or about 10 gallons per hour. Multiply the number of residences by 10 and by the number of hours. This gives you the number of gallons.

   NOTES:

   a. Remember that 10-gallons per hour is an estimate. This number will be higher during peak water usage times and lower during low water usage times. Take this into account when estimating the overflow volume.

   b. This is a conservative estimate because stoppages rarely stop all of the flow.

Bypass Pump Selection Table: 0-25 Feet Total Lift

Pipe Size (in)	Flow rate (gpm)	50	100	150	200	250	300	350	400	450	500	600	700	800	900	1000
18	4500	8"	8"	8"	8"											
18	4000	8"	8"	8"	8"	8"	8"	8"								
18	3500	8"	8"	8"	8"	8"	8"	8"	8"	8"	8"					
18	3000	8"	8"	8"	8"	8"	8"	8"	8"	8"	8"	8"	8"	8"		
18	2500	8"	8"	8"	8"	8"	8"	8"	8"	8"	8"	8"	8"	8"	8"	8"
15	2000	6"	6"	6"	8"	8"	8"	8"	8"	8"	8"	8"	8"	8"	8"	8"
15	1500	6"	6"	6"	6"	6"	6"	6"	6"	8"	8"	8"	8"	8"	8"	8"
15	1000	6"	6"	6"	6"	6"	6"	6"	6"	6"	6"	6"	6"	6"	6"	6"
10	750	4"	6"	6"	6"	6"	6"	6"	6"	6"	6"	6"	6"	6"	6"	6"
8	500	4"	4"	4"	4"	4"	4"	4"	6"	6"	6"	6"	6"	6"	6"	6"
8	400	4"	4"	4"	4"	4"	4"	4"	4"	4"	4"	4"	6"	6"	6"	6"
8	300	[illegible]	[illegible]	[illegible]	4"	4"	4"	4"	4"	4"	4"	4"	4"	4"	4"	4"
4	200	[illegible]	[illegible]	[illegible]	[illegible]	[illegible]	[illegible]	[illegible]	[illegible]	[illegible]	4"	4"	4"	4"	4"	4"
4	100	[illegible]	[illegible]	[illegible]	[illegible]	[illegible]	[illegible]	[illegible]	[illegible]	[illegible]	[illegible]	[illegible]	[illegible]	[illegible]	[illegible]	[illegible]
4	50	[illegible]	[illegible]	[illegible]	[illegible]	[illegible]	[illegible]	[illegible]	[illegible]	[illegible]	[illegible]	[illegible]	[illegible]	[illegible]	[illegible]	[illegible]

Hose Length (ft)

Pipe Size (in)	Avg Flow Rate (gpm)
4	270
6	314
8	486
10	764
12	1667
15	2153
18	4444

Assumptions

1. All loses are ignored except for frictional losses.
2. Velocity heads are zero because of low speeds.
3. Pump curves are from www rainforrent.com.
   a. 3" pump DV-80 @ 2800 rpm
   b. 4" pump DV-100 @ 2200 rpm
   c. 6" pump DV-150 @ 2200 rpm
   d. 8" pump DV-200c @ 1900 rpm
4. Hose diameter is same as pump size.
5. Fire hose roughness coefficient C=120
6. Inlet and outlet pressures are at atmospheric pressure.
7. Average flow rates for pipe diameters are calculated using average slopes.
8. Maximum 25 feet suction lift.

Bypass Pump Selection Table: 25-50 Feet Total Lift

Pipe Size (in)	Flow rate (gpm)	50	100	150	200	250	300	350	400	450	500	600	700	800	900	1000
18	4500	8"	8"	8"	8"											
18	4000	8"	8"	8"	8"	8"	8"	8"								
18	3500	8"	8"	8"	8"	8"	8"	8"	8"	8"	8"					
18	3000	8"	8"	8"	8"	8"	8"	8"	8"	8"	8"	8"	8"	8"		
18	2500	8"	8"	8"	8"	8"	8"	8"	8"	8"	8"	8"	8"	8"	8"	8"
15	2000	6"	6"	6"	8"	8"	6"	8"	8"	8"	8"	8"	8"	8"	8"	8"
15	1500	6"	6"	6"	6"	6"	6"	6"	8"	8"	8"	8"	8"	6"	8"	8"
15	1000	6"	6"	6"	6"	6"	6"	6"	6"	6"	6"	6"	6"	6"	6"	6"
10	750	6"	6"	6"	6"	6"	6"	6"	6"	6"	6"	6"	6"	6"	6"	6"
8	500	4"	4"	4"	4"	4"	6"	6"	6"	6"	6"	6"	6"	6"	6"	6"
8	400	4"	4"	4"	4"	4"	4"	4"	4"	6"	6"	6"	6"	6"	6"	6"
8	300	4"	4"	4"	4"	4"	4"	4"	4"	4"	4"	4"	4"	4"	4"	4"
4	200	3"	3"	3"	3"	3"	3"	4"	4"	4"	4"	4"	4"	4"	4"	4"
4	100	3"	3"	3"	3"	3"	3"	3"	3"	3"	3"	3"	3"	3"	3"	3"
4	50	3"	3"	3"	3"	3"	3"	3"	3"	3"	3"	3"	3"	3"	3"	3"

Hose Length (ft)

Assumptions

1. All loses are ignored except for frictional losses.
2. Velocity heads are zero because of low speeds.
3. Pump curves are from www rainforrent.com.
   a. 3" pump DV-80 @ 2800 rpm
   b. 4" pump DV-100 @ 2200 rpm
   c. 6" pump DV-150 @ 2200 rpm
   d. 8" pump DV-200c @ 1900 rpm
4. Hose diameter is same as pump size.
5. Fire hose roughness coefficient C=120
6. Inlet and outlet pressures are at atmospheric pressure.
7. Average flow rates for pipe diameters are calculated using average slopes.
8. Maximum 50 feet suction lift.

Pipe Size (in)	Avg Flow Rate (gpm)
4	270
6	314
8	486
10	764
12	1667
15	2153
18	4444

Determining Overflow Rates From a Manhole: Flow from a Manhole Picture Matching

Reference Sheet for Estimating Sewer Flow Rate From Overflowing Sewer Maintenance Holes

All estimates are calculated in gallons per minute (gpm)

All photos were taken during a demonstration using metered water from a hydrant in cooperation with the city of San Diego's Water Department

Determining Overflow Rates From a Manhole:
Flow From a Manhole with Cover In Place Tables

The formula used to develop Table 1 measures the maximum height of the water coming out of the maintenance hole above the rim. The formula was taken from hydraulics and its application by A.H. Gibson (Constable & Co. Limited).

Example Overflow Estimation:

The maintenance hole cover is unseated and slightly elevated on a 24" casting. The maximum height of the discharge above the rim is 5 1/4 inches. According to Table 1, these conditions would yield an SSO of 185 gallons per minute.

FLOW OUT OF MH WITH COVER IN PLACE

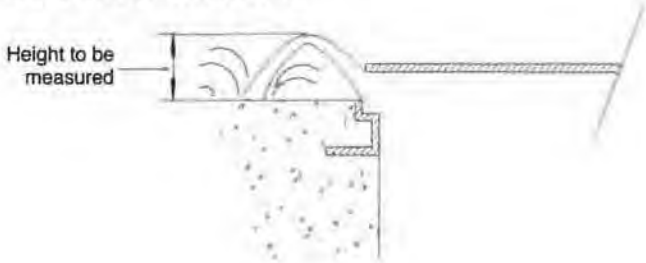

This sanitary sewer overflow drawing was developed by Debbie Myers, Principal Engineering Technician, for Ed Euyen, Civil Engineer, P.E. No. 33955, California, of County Sanitation District 1.

Determining Overflow Rates From a Manhole:
Flow From a Manhole with Cover In Place Tables

24" COVER

Height of spout above M/H rim H in inches	S S O FLOW Q		Min. Sewer size in which these flows are possible
	in gpm	in MGD	
1/4	1	0.001	
1/2	3	0.004	
3/4	6	0.008	
1	9	0.013	
1 1/4	12	0.018	
1 1/2	16	0.024	
1 3/4	21	0.030	
2	25	0.037	
2 1/4	31	0.045	
2 1/2	38	0.054	
2 3/4	45	0.065	
3	54	0.077	
3 1/4	64	0.092	
3 1/2	75	0.107	
3 3/4	87	0.125	
4	100	0.145	
4 1/4	115	0.166	
4 1/2	131	0.189	
4 3/4	148	0.214	
5	166	0.240	
5 1/4	185	0.266	
5 1/2	204	0.294	
5 3/4	224	0.322	6"
6	244	0.352	
6 1/4	265	0.382	
6 1/2	286	0.412	
6 3/4	308	0.444	
7	331	0.476	
7 1/4	354	0.509	
7 1/2	377	0.543	
7 3/4	401	0.578	8"
8	426	0.613	
8 1/4	451	0.649	
8 1/2	476	0.686	
8 3/4	502	0.723	

36" COVER

Height of spout above M/H rim H in inches	S S O FLOW Q		Min. Sewer size in which these flows are possible
	in gpm	in MGD	
1/4	1	0.002	
1/2	4	0.006	
3/4	8	0.012	
1	13	0.019	
1 1/4	18	0.026	
1 1/2	24	0.035	
1 3/4	31	0.044	
2	37	0.054	
2 1/4	45	0.065	
2 1/2	55	0.079	
2 3/4	66	0.095	
3	78	0.113	
3 1/4	93	0.134	
3 1/2	109	0.157	
3 3/4	127	0.183	
4	147	0.211	
4 1/4	169	0.243	
4 1/2	192	0.276	
4 3/4	217	0.312	6"
5	243	0.350	
5 1/4	270	0.389	
5 1/2	299	0.430	
5 3/4	327	0.471	
6	357	0.514	
6 1/4	387	0.558	8"
6 1/2	419	0.603	
6 3/4	451	0.649	
7	483	0.696	
7 1/4	517	0.744	
7 1/2	551	0.794	
7 3/4	587	0.845	10"
8	622	0.896	
8 1/4	659	0.949	
8 1/2	697	1.003	
8 3/4	734	1.057	
9	773	1.113	

Disclaimer:
Ed Euyen, Civil Engineer, P.E. No. 33955, California developed this sanitary sewer overflow table, for County Sanitation District 1. This table is provided as an example. Other Agencies may want to develop their own estimating tables.

Determining Overflow Rates From a Manhole:
Flow From a Manhole with Cover Removed Tables

The maintenance hole cover is off and the flow coming out of a 36" frame maintenance hole at one-inch (1") height will be approximately 660 gallons per minute.

FLOW OUT OF MH WITH COVER REMOVED (TABLE 2)

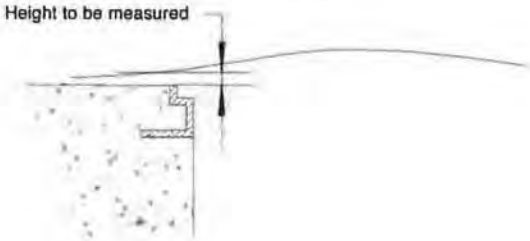

This sanitary sewer overflow drawing was developed by Debbie Myers, Principal Engineering Technician, for Ed Euyen, Civil Engineer, P.E. No. 33955, California, of County Sanitation District 1.

Determining Overflow Rates From a Manhole:
Flow From a Manhole with Cover Removed Tables

24" FRAME

Water Height above M/H frame H in inches	S S O FLOW Q		Min. Sewer size in which these flows are possible
	in gpm	in MGD	
1/8	28	0.04	
1/4	62	0.09	
3/8	111	0.16	
1/2	160	0.23	
5/8	215	0.31	6"
3/4	354	0.51	8"
7/8	569	0.82	10"
1	799	1.15	12"
1 1/8	1,0355	1.49	
1 1/4	1,340	1.93	15"
1 3/8	1,660	2.39	
1 1/2	1,986	2.86	18"
1 5/8	2,396	3.45	18"
1 3/4	2,799	4.03	
1 7/8	3,132	4.51	
2	3,444	4.96	21"
2 1/8	3,750	5.4	
2 1/4	3,986	5.74	
2 3/8	4,215	6.07	
2 1/2	4,437	6.39	
2 5/8	4,569	6.58	24"
2 3/4	4,687	6.75	
2 7/8	4,799	6.91	
3	4,910	7.07	

36" FRAME

Water Height above M/H frame H in inches	S S O FLOW Q		Min. Sewer size in which these flows are possible
	in gpm	in MGD	
1/8	49	0.07	
1/4	111	0.16	
3/8	187	0.27	6"
1/2	271	0.39	
5/8	361	0.52	8"
3/4	458	0.66	
7/8	556	0.8	10"
1	660	0.95	12"
1 1/8	1,035	1.49	
1 1/4	1,486	2.14	15"
1 3/8	1,951	2.81	
1 1/2	2,424	3.49	18"
1 5/8	2,903	4.18	
1 3/4	3,382	4.87	
1 7/8	3,917	5.64	21"
2	4,458	6.42	
2 1/8	5,000	7.2	24"
2 1/4	5,556	8	
2 3/8	6,118	8.81	
2 1/2	6,764	9.74	
2 5/8	7,403	10.66	
2 3/4	7,972	11.48	30"
2 7/8	8,521	12.27	
3	9,062	13.05	
3 1/8	9,604	13.83	
3 1/4	10,139	14.6	
3 3/8	10,625	15.3	36"
3 1/2	11,097	15.98	
3 5/8	11,569	16.66	
3 3/4	12,035	17.33	
3 7/8	12,486	17.98	
4	12,861	18.52	
4 1/8	13,076	18.83	
4 1/4	13,285	19.13	
4 3/8	13,486	19.42	

Disclaimer:

Ed Euyen, Civil Engineer, P.E. No. 33955, California developed this sanitary sewer overflow table, for County Sanitation District 1. This table is provided as an example. Other Agencies may want to develop their own estimating tables.

Determining Overflow Rates From a Manhole:
Flow From a Manhole Pick Hole Tables

The formula used to develop Table 3 is Q=CcVA, where Q is equal to the quantity of the flow in gallons per minute, Cc is equal to the coefficient of contraction (.63), V is equal to the velocity of the overflow, and A is equal to the area of the pick hole.[2] If all units are in feet, the quantity will be calculated in cubic feet per second, which when multiplied by 448.8 will give the answer in gallons per minute. (One cubic foot per second is equal to 448.8 gallons per minute, hence this conversion method).

Example Overflow Estimation:

The maintenance hole cover is in place and the height of water coming out of the pick hole seven-eighths of an inch in diameter (7/8") is 3 inches (3"). This will produce an SSO flow of approximately 4.7 gallons per minute.

FLOW OUT OF VENT OR PICK HOLE (TABLE 3)

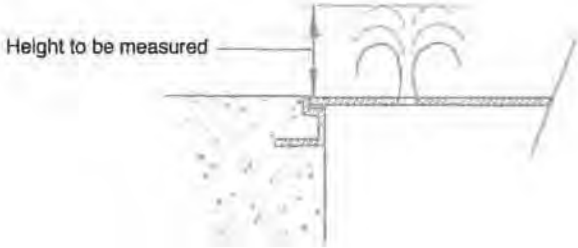

This sanitary sewer overflow drawing was developed by Debbie Myers, Principal Engineering Technician, for Ed Euyen, Civil Engineer, P.E. No. 33955, California, of County Sanitation District 1.

Determining Overflow Rates From a Manhole:
Flow From a Manhole Pick Hole Tables

Height of spout above M/H cover H in inches	SSO FLOW Q in gpm
1/8	1.0
1/4	1.4
3/8	1.7
1/2	1.9
5/8	2.2
3/4	2.4
7/8	2.6
1	2.7
1 1/8	2.9
1 1/4	3.1
1 3/8	3.2
1 1/2	3.4
1 5/8	3.5
1 3/4	3.6
1 7/8	3.7
2	3.9
2 1/8	4.0
2 1/4	4.1
2 3/8	4.2
2 1/2	4.3
2 5/8	4.4
2 3/4	4.5
2 7/8	4.6
3	4.7
3 1/8	4.8
3 1/4	4.9
3 3/8	5.0
3 1/2	5.1
3 5/8	5.2
3 3/4	5.3
3 7/8	5.4
4	5.5
4 1/8	5.6
4 1/4	5.6
4 3/8	5.7
4 1/2	5.8
4 5/8	5.9
4 3/4	6.0
4 7/8	6.0
5	6.1

Height of spout above M/H cover H in inches	SSO FLOW Q in gpm
5 1/8 5 1/4	6.2 6.3
5 3/8	6.3
5 1/2	6.4
5 5/8	6.5
5 3/4	6.6
5 7/8	6.6
6	6.7
6 1/8	6.8
6 1/4	6.8
6 3/8	6.9
6 1/2	7.0
6 5/8	7.0
6 3/4	7.1
6 7/8	7.2
7	7.2
7 1/8	7.3
7 1/4	7.4
7 3/8	7.4
7 1/2	7.5
7 5/8	7.6
7 3/4	7.6
7 7/8	7.7
8	7.7
8 1/8	7.8
8 1/4	7.9
8 3/8	7.9
8 1/2	8.0
8 5/8	8.0
8 3/4	8.1
8 7/8	8.1
9	8.2
9 1/8	8.3
9 1/4	8.3 -
9 3/8	8.4
9 1/2	8.4
9 5/8	8.5
9 3/4	8.5
9 7/8	8.6
10	8.7

Unrestrained MH cover will start to lift

Note: This chart is based on a 7/8-inch diameter pick hole

Disclaimer: Ed Euyen, Civil Engineer, P.E. No. 33955, California developed this sanitary sewer overflow table, for County Sanitation District 1. This table is provided as an example. Other Agencies may want to develop their own estimating tables.

Sewer Overflow Response Tactics Guide

The following is intended to be used a guide for generating ideas in how to respond to sewer overflows resulting from a variety of causes. Please bear in mind that each indicated response tactic may not be appropriate for a given sewer overflow. Always choose the tactic that best meets the circumstances at the time and the resources available. Protection of employee, public and environmental health should always be the top consideration when responding to a sewer overflow, regardless of its cause.

If you encounter an SSO due to:	These are the recommended solutions you should consider											
	Hydro-Jetter	Rodder	Vacuum Truck	TV Van*	Backhoe **	Hand Tools	By-Pass Piping	By - Pass Pumping	Manhole Entry***	Storage Tanks or Set Up Ponds	USA Request**	Backup Generators
Capacity due to gradient			■				■	■		■		
Capacity due to undersized line			■				■	■		■		
Capacity due to surcharged system										■		
Collapse	■	■	■		■		■	■			■	
Debris in Manhole			■			■			■			
Debris in line	■	■	■	■								
Grease	■	■	■	■								
Misc. blockage	■	■	■	■			■	■				
Roots	■	■	■	■			■	■				
Pump Station Failure								■				■
Power Failure								■				■

* CCTV operations may be required for this particular task.
** USA Services MUST be contacted prior to start of excavation! (1-800-227-2600).
*** Confined space entry procedures MUST be followed!

7.0 Fats, Oils, and Grease Control Program

7 Fats, Oils, and Grease (FOG) Control Program

The City has identified sections of the sewer system that are subject to grease blockages. The following subsections describe the City's ongoing and future efforts to control FOG.

7.1 Identification & Sewer Cleaning

During routine sewer cleaning, the City has identified areas or line segments of the wastewater collection system that are subject to grease stoppages and have established a prioritized cleaning schedule for each area. These "hot spots" require more frequent cleaning and further control of FOG sources. In general, routine cleaning of the collection system is conducted. For the hot spots, investigation of these lines is conducted quarterly and additional cleaning is conducted based on the results of the investigations.

7.2 Source Control

The City has developed source control activities for educating local businesses about FOG control. New businesses are given a package of materials upon opening their business (see Attachments to this chapter). Additionally, restaurants are required to maintain a log book of grease trap cleaning and are notified that the City may inspect their establishment at any time. Annual mailers are sent to restaurants reminding them of their requirements and of good operating practices (see attached, "A Guide for Food Service Facilities" available in English and Spanish). The City has also posted pollution prevention information on their webpage at: http://city.ci.st-helena.ca.us/section.cfm?id=114.

7.3 Facility Inspection

All restaurants and food establishments are subjected to an annual Health, FOG, Stormwater inspection performed by the Napa County Department of Environmental Management. At the time of inspection, facilities will be given FOG control brochures as well as a list of grease disposal companies for Napa County.

7.4 Legal Authority

The City administers a FOG Program, which is specifically aimed towards restaurants to reduce the amount of grease entering the sewer system. This helps reduce sewer system overflows caused by pipes clogged with grease. It also helps reduce the amount of damage caused to some of the pipes after repetition cleaning. The City requires businesses to install and maintain a grease removal device (grease trap, interceptor or vault) depending on the type of food service business (restaurants, bakeries, etc.) to collect grease as part of this program. The City has a subsection on grease trap requirements in its municipal code, which is also included as an attachment to this chapter.

7.0 Fats, Oils, and Grease Control Program

Attachments

Grease Trap Ordinance

Title 13 PUBLIC SERVICES
Chapter 13.24 WASTEWATER DISCHARGE

13.24.100 Greasetraps.

A. All restaurants and food preparation businesses producing discharges of wastewater that at any time exceed the limitations of Section 13.24.030(H)(2) shall install and maintain in good operating condition at all times a greasetrap or grease interceptor sufficient to process all wastewater containing grease or oil produced or occurring on the premises, and all wastewater containing grease or oil shall be processed through said greasetrap prior to any discharge thereof into the community sewers.

B. All greasetraps or grease interceptors installed and maintained pursuant to subsection A of this section shall conform to the approved designs and specifications maintained on file by the public works director or shall conform to the Uniform Plumbing Code and be approved in design and specifications by the public works director.

C. All restaurants and food preparation businesses existing on the effective date hereof, which are required by subsection A of this section to install a greasetrap or grease interceptor shall complete installation of the same within sixty (60) days after the effective date hereof. All restaurants and food preparation services required to comply with subsection A of this section which are established after the effective date hereof shall complete installation of the required greasetrap or grease interceptor prior to opening for business.

D. All parties maintaining a greasetrap or grease interceptor shall maintain the same in good operating condition and shall clean and dispose of the accumulated waste as frequently as is necessary to maintain proper operating conditions. None of the waste materials cleaned from any such wastetrap or waste interceptor shall be disposed of into any city storm drain or sewer manhole nor in any other manner which constitutes a public or private nuisance. Violations of this subsection shall constitute an infraction.

E. The city’s public works director and any Napa County environmental health personnel acting under his or her directions may enter any restaurant or food preparation business premises where any such greasetrap or grease interceptor is required to be maintained to inspect such devices periodically or whenever deemed necessary to ascertain whether all requirements of this section are being complied with. (Prior code § 12.19)

FOG Outreach Materials

Help Prevent Pollution:
A Guide for Food Service Facilities

Pollution Prevention

Clean and healthy creeks, rivers, and bays are important to the City of St. Helena. However, allowing debris from your business to enter the gutter and storm drains can lead to water pollution. Storm drains carry rainwater from our streets, and should never contain wash water, trash, grease or other materials. Unlike substances that enter the sanitary sewers (from sinks and toilets), substances that enter the storm drains do not receive treatment before entering our waterways. In addition, blocked sewer lines can cause raw sewage to back up into kitchens, bathrooms, city streets, storm drains, and our waterways.

This brochure will explain steps your food establishment can take to help preserve water quality by keeping debris out of storm drains and by preventing fats, oils, and grease from blocking sewer lines.

Use Grease Interceptors To Capture Fats, Oils, and Grease (FOG).

Cleaning Spills and Equipment

- Never hose a spill into a gutter, street or storm drain!
- Before mopping a wet kitchen spill, absorb it with towels, cat litter or other absorbent materials.
- Sweep up dry spills immediately and dispose of the material in the trash.
- Scrape grease and food waste from floor mats and filters before cleaning. Dispose of scrapings in trash.
- After scraping, clean floor mats, filters, and garbage cans in a mop, sink or a designated, curbed area connected to the sanitary sewer. Consider using a cleaning service for these activities.

Absorb Wet Spills With Cat Litter Or Towels; Discard In The Trash

Dumpster/Grease Bin Area Cleaning

- Keep the area around the dumpster clear of trash and other debris. Do not overfill the dumpster.
- Cover dumpsters to block insects, animals, rainwater and wind.
- Sweep or vacuum up trash and throw it away.
- Absorb wet spills with cat litter, towels or similar materials. Discard in the trash.
- Do not rinse your dumpster area! Doing so can cause grease and trash to enter the storm drains.
- Have leaky dumpsters replaced.

Use Janitorial Mop Sinks For Cleaning Mops, Towels, And Floor Mats.

Prevent Fats, Oils, and Grease from Blocking the Sewers

Fats, oils, and grease (FOG) can cause sewer line blockages which can make sewage overflow into your facility and into storm drains that lead to the Napa River. To stop the substances from building up in sewer lines, prevent them from entering your drains.

Photo Courtesy of the Monterey Regional Water Pollution Control Agency.

Practices in the Kitchen

- Collect waste cooking oil and grease in portable containers with lids. Transfer into drums or barrels for recycling.
- Do not pour oil or grease down any drain. Recycle or use absorbent materials and dispose of waste in the trash.
- Dry-wipe pots, pans, dishware, and work areas to remove all visible grease before washing. Dispose of waste in the trash.
- Use drain screens to capture food waste and dispose of properly into the trash.
- Train employees about proper grease disposal and post "NO GREASE" signs near all sinks or drains.

Maintenance of Grease Traps and Interceptors

- Reduce solids going to the grease trap or interceptor.
- Inspect and clean grease traps frequently to ensure proper operation.
- Have a licensed company inspect and pump out grease interceptors regularly to ensure proper operation.
- Keep maintenance records on-site for reference and regulatory review.

For more information, call the City of St. Helena Department of Public Works at (707) 968-2658

For emergencies call 911.

St. Helena Pollution Prevention Program

In cooperation with The Napa County Storm Water Management Program

Eliminación de residuos

- Inspeccione periódicamente los contenedores de basura y los compactadores para asegurar que no tengan fugas. Si tienen fugas, llame a la empresa de arrendamiento para que los repare o los reemplace.

- Cubra los contenedores y otros receptáculos de basura para evitar que el agua de lluvia caiga dentro.

- Nunca arroje productos de desecho o desperdicios, como los de alimentos o líquidos, a los desagües de aguas pluviales. Done los alimentos en buen estado a un banco de alimentos, participe en programas de realización de abono compuesto con desperdicios de alimentos, comuníquese con una empresa de alimentación de animales o elimine los residuos de alimentos en un receptáculo para basura.

- Nunca lave con manguera los contenedores de basura ni las áreas en que estos se encuentran. Si es necesario limpiar un contenedor de basura, comuníquese con la empresa de arrendamiento de los contenedores. Use métodos de limpieza en seco para lavar el área en que se encuentran los contenedores de basura o bien realice otras Prácticas de mejor manejo (Best Management Practices – BMPs, en inglés) para limpiar el área en que estos se encuentran para evitar que el agua usada para la limpieza fluya hacia el sistema de drenaje de aguas pluviales.
- Es ilegal manipular o desechar inapropiadamente cualquier producto que pueda fluir hacia un drenaje de aguas. Tanto la empresa como las personas responsables de esto están sujetas a enjuiciamiento civil y criminal.

St. Helena Pollution Prevention Program

In cooperation with The Napa County Storm Water Management Program

Tratamiento y almacenamiento de grasas

- No vierta aceite de cocina ni grasa para cocinar en fregaderos ni en desaguaderos ubicados en el piso; tampoco los vierta en estacionamientos, en drenajes de aguas pluviales o en la calle.

- Elimine o recicle el aceite de cocina y la grasa para cocinar por medio de un transportista de desperdicios de grasas autorizado o de una agencia de reciclado de grasas autorizado. Busque transportistas y agencias de reciclado de grasas en las Páginas Amarillas bajo el nombre de "tallow" (sebo o grasa animal).

- Realice un mantenimiento de los interceptores de aceites y grasas al menos una vez al mes. Para que los interceptores de aceites y grasas funcionen correctamente, no deben contener más de 1/3 de su capacidad de capa de grasa flotante ni más de 1/4 de su capacidad de sedimento en el fondo (www.oracwa.org).

- Debe realizarse un mantenimiento semanal de los colectores de grasa instalados bajo los fregaderos. Será necesario mantenerlos con más frecuencia si la grasa sobrepasa el 50% de capacidad del colector (www.oracwa.org).

- Límpielos en seco. Use rascadores para quitar los desperdicios de alimentos de la vajilla, las ollas, las sartenes, las parrillas y las superficies para cocinar antes de limpiarlas con agua. Deseche los desperdicios de alimentos en un receptáculo para basura, envíelos a una empresa de alimentación de animales o done las sobras de alimentos en buen estado a un banco de alimentos.

- Coloque papel para alimentos para absorber el aceite y la grasa bajo los canastos de las sartenes. Deseche el papel engrasado en un receptáculo para basura.

- Es ilegal manipular o desechar inapropiadamente cualquier producto que pueda fluir hacia un drenaje de aguas. Tanto la empresa como las personas responsables de esto están sujetas a enjuiciamiento civil y criminal.

St. Helena Pollution Prevention Program

In cooperation with The Napa County Storm Water Management Program

Limpieza de pisos y pavimentos

- Mantenga limpias las áreas de estacionamientos, de accesos para coches y de contenedores de basura y retire los desechos acumulados. Use métodos de limpieza en seco para los derrames: por ejemplo, barra en vez de lavar con agua; use trapos, piedras sanitarias para gatos u otro tipo de materiales absorbentes; coloque la basura y los desechos sólidos en contenedores de basura. Si limpia un derrame con un trapeador, deseche el agua que usó para lavar el trapeador en fregaderos interiores para limpieza o en fregaderos exclusivos para trapeadores.

- No limpie el pavimento ni ningún área exterior con manguera para evitar que este agua fluya hacia el drenaje de aguas. Use un limpiador de superficies certificado por BASMAA (www.city.paloalto.ca.us/cleanbay/cbb.html) para lavar aceras, áreas de acceso para coches y estacionamientos. Sus empleados y su contratista deben hacer uso de las BMPs para evitar que el agua utilizada para lavar fluya hacia el sistema de drenaje de aguas pluviales.

- Nunca vierta ni barra aguas residuales provenientes de pisos de restaurantes por la puerta trasera o hacia una canaleta, un drenaje de aguas pluviales o un riachuelo. Deseche el agua que usó para lavar el trapeador en fregaderos interiores para limpieza o en retretes.

- Es ilegal manipular o desechar inapropiadamente cualquier producto que pueda fluir hacia un drenaje de aguas. Tanto la empresa como las personas responsables de esto están sujetas a enjuiciamiento civil y criminal.

St. Helena Pollution Prevention Program

In cooperation with The Napa County Storm Water Management Program

Limpieza de equipos

- Limpie alfombras, filtros para grasa, tarros de basura y otros equipos de restaurante en un fregadero para limpieza, un drenaje para pisos interior u otras áreas de lavado designadas cuyas aguas fluyan hacia el sistema de alcantarillado sanitario. Hable con la agencia local de alcantarillado sanitario para conocer los requisitos. El agua usada para lavar los equipos no debe fluir hacia el sistema de drenaje de aguas pluviales.

- Si el restaurante hace limpiar las alfombras, las campanas de ventilación o cualquier otro equipo por un contratista, asegúrese de que el agua utilizada para lavar no fluya hacia el sistema de drenaje de aguas pluviales. El restaurante es responsable de las acciones del contratista.

- Verifique el buen funcionamiento de los ventiladores de extracción y las chimeneas de ventilación ubicados en el techo al menos una vez por semana. Coloque una bandeja de recolección de aceite bajo los recubrimientos de los ventiladores de extracción ubicados en el techo para recolectar el aceite de cocina y la grasa; vacíe semanalmente las bandejas

- No limpie los equipos en fregaderos que se usan para la preparación de alimentos.

- Es ilegal manipular o desechar inapropiadamente cualquier producto que pueda fluir hacia un drenaje de aguas. Tanto la empresa como las personas responsables de esto están sujetas a enjuiciamiento civil y criminal.

Grease Blockage in sewer pipe.

Prevent Fats, Oils, and Grease from Blocking the Sewer

Fats, oils, and grease (FOG) can cause sewer line blockages into your facility and into storm drains that lead to the Napa River. To stop the substances from building up in sewer lines, prevent them from entering your drains.

Kitchen Practices

- Collect waste cooking oil and grease in portable containers with lids. Transfer into drums or barrels for recycling

- Do not pour oil or grease down any drain. Recycle or use absorbent materials and dispose of waste in trash.
- Dry-wipe pots, pans, dishware, and work areas to remove all visible grease before washing. Dispose of waste in the trash.
- Use drain screens to capture food waste and dispose if properly into the trash.
- Train employees about proper grease disposal and post "NO GREASE" signs near all sinks or drains.

Illustrations courtesy of the City of Los Angeles and Orange County. Photo courtesy of the Monterey Regional Water Pollution Control Agency.

Maintenance of Grease Traps and Interceptors

- Reduce solids going to the grease trap or interceptor.
- Inspect and clean grease traps frequently to ensure proper operation,
- Have a licensed company inspect and pump out grease interceptors regularly to ensure proper operation.
- Keep maintenance records on-site for reference and regulatory review.

For more information call:
Department of Public Works (707) 968-2658, email us at: *publicworks@ci.st-helena.ca.us* or visit us at www.sthelenacity.com

IN CASE OF EMERGENCY CALL 911

PROTECTING WATER QUALITY

A GUIDE FOR GREATER ST. HELENA'S FOOD SERVICE FACILITIES

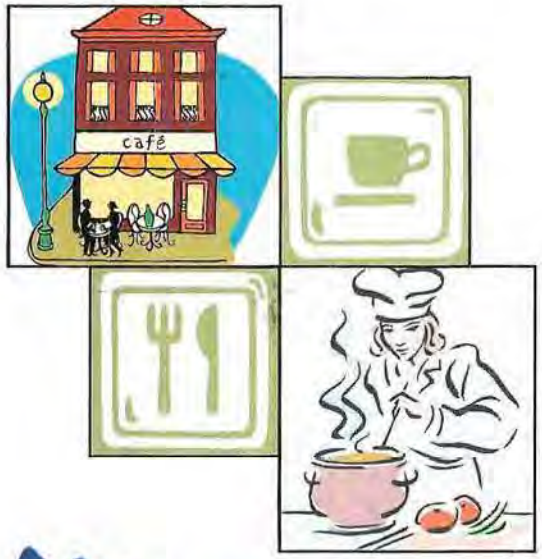

Only Rain Down The Drain!

POLLUTION PREVENTION

Clean and healthy creeks, rivers, and bays are important to the City of St. Helena. However, allowing debris from your business to enter the gutter and storm drains can lead to water pollution. Storm drains carry rainwater from our streets, and should never contain wash water, trash, grease or other materials. Unlike substances that enter the sanitary sewers (from sinks and toilets), substances that enter the storm drains do not receive treatment before entering our waterways. In addition, blocked sewer lines can cause raw sewage to back up into kitchens, bathrooms, city streets, storm drains, and our waterways.

Capture Fats, Oils and Grease (FOG) and Recycle or Dispose of as Solid Waste

Cleaning Spills and Equipment

- **Never hose a spill into a gutter, street, or storm drain!**
- Before mopping a wet kitchen spill, absorb it with towels, cat litter or other absorbent materials.
- Sweep up dry spills immediately and dispose of in the trash.
- Scrape grease and food waste from floor mats and filters before cleaning. Dispose of scrapings in trash.
- After scraping, clean floor mats, filters, and garbage cans in a mop sink or designated, curbed area connected to the sanitary sewer. Consider using a cleaning service for these activities.

Absorb Spills with Cat Litter or Towels; Discard in the Trash

Dumpster/Grease Bin Area Cleaning

- Keep the area around the dumpster clear of trash and other debris. Don't overfill the dumpster.
- Cover dumpsters to block insects, animals, rainwater and wind.
- Sweep or vacuum up trash and throw it away.
- Absorb wet spills with cat litter, towels, or similar material. Discard in the trash.
- **Do Not Rinse Your Dumpster Area!** Doing so can cause grease and trash to enter the storm drains.
- Have leaky dumpsters replaced.

Use Janitorial Mop Sinks for Cleaning Mops, Towels and Floor Mats

Example of Poster given to new Food & Restaurant Establishments

Good Cleaning Practices

Food & Restaurant Industry

Clean floormats, filters and garbage cans in a mop sink, floor drain or proper outside area. Don't wash them in a parking lot, alley, sidewalk or street.

Limpie los tapetes de piso, los filtros y los botes de basura en un fregadero para trapeadores, desagüe de piso o en algún sitio apropiado afuera. No los lave en los estacionamientos, callejones, veredas o en la calle.

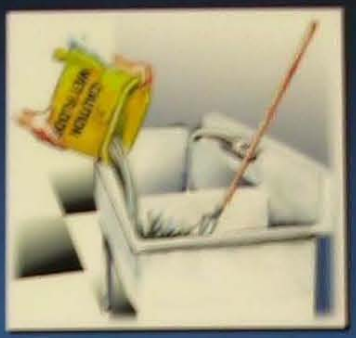

Pour washwater into a janitorial or mop sink. Don't pour it out onto a parking lot, alley, sidewalk or street.

Arroje el agua empleada en la limpieza al fregadero para trapeadores. No la arroje en los estacionamientos, callejones, veredas o en la calle.

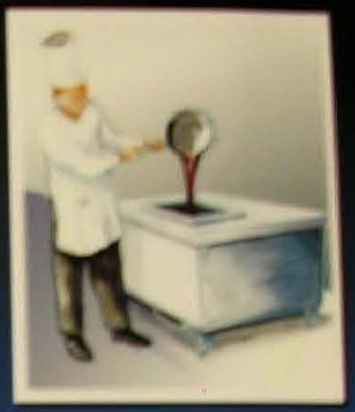

Recycle grease and oil. Don't pour it into sinks, floor drains, or onto a parking lot or street.

Recicle grasa y aceite. No los arroje en lavaderos o desagües de piso ni en estacionamientos o calles.

Keep dumpster area clean and lid closed. Don't fill it with liquid waste or hose it out.

Mantenga el área alrededor del basurero limpia y la tapa cerrada. No lo llene con desperdicios líquidos ni utilice la manguera.

Use dry methods for spill cleanup (sweeping, cat litter, etc.) Don't hose down spills.

Use métodos secos para limpiar los derrames (barrido, arena de los gatos, etc.). No utilice mangueras para limpiar los derrames.

For a

CLEANER NAPA RIVER

Only Rain Down the Drain!

Grease Disposal Companies for Napa County

Compañías de Eliminación de Grasa para el Condado de Napa

SEPTIC HAULER	CONTACTS	CLEANS VAULTS	CLEANS TRAPS	PROVIDE & CLEANS TALLOW BINS	PHONE #
DARLING INTERNATIONAL		Yes	No	Yes	800-473-4890
DEPENDABLE SEPTIC SYSTEMS	Renee Bauman	Yes	Yes	No	707-257-2127
					707-963-4161
ROTO ROOTER	Robert Cortez	Yes	No	No	707-224-2433
					707-963-7934
SACRAMENTO RENDERING COMPANY (SRC)	Travis/Jim Walsh	Yes	Yes	Yes	800-772-8727
WINE COUNTRY SANITARY	John Morovich	Yes	No	No	707-996-4331

Note: This is only a partial list. For further information , consult the local phone book or on-line at: www.ciwmb.ca.gov/foodwaste/render.htm#Solano.
The City of St. Helena is providing this list for your reference and does not endorse any companies.

FOG Inspection Materials

RESTAURANT INSPECTION OUTLINE

- Bring supplies to inspection
- Begin inspections in “hot spot” areas
- Introduce yourself and give Fats, Oils, And Grease Best Management Practices brochure
- Complete every item on the inspection report (with n/a if an item is not applicable to facility)
- Check for the presence of floor drains
- Check for screening devices in sinks
- Discuss limited use of under-the-sink garbage disposal units to reduce solids to sewer
- Check for an automatic dishwasher. Make sure the dishwasher bypasses the grease trap
- Make sure the dishwasher water goes through the outside grease vault.
- Check for a pre-wash sink
- Ask if any acids, enzymes, emulsifiers, or solvents are being use – they are prohibited
- Inquire if bacterial cultures are used for grease treatment
- Encourage employees to scrape food and grease off pots, pans, plates and cooking utensils
- Encourage employees to wipe utensils with paper towels any excess fats, oil and grease
- Discard food scraps, FOG, and paper towels in solid waste receptacle.
- Discard grill-cleaning residuals in grease storage container or solid waste bin
- Check for the type, size, and condition of all FOG removal devices
- Inspect vault and/or trap
- Inspect tallow or grease storage area
- Inspect rendering bin outside for fryer oil disposal
- Observe housekeeping practices for storm discharge consideration
- Document the name of the rendering firm. Check for manifests.
- Check floor mats, serving carts, or any other equipment, cleaning procedures
- Inventory janitorial cleaners, chemicals and quantities on site
- Check that washwater is poured into a utility sink or curbed cleaning facility with a floor drain
- Document most recent FOG pick-up. Check cleaning schedule
- Record hauler company and name of hauler
- Require that vaults be completely pumped of its contents
- Do not endorse products, advice is acceptable
- Advise facility of random sampling for compliance verification.
- Discuss stormwater concerns
- Look for a cleanout or sampling port, sample if necessary or if facility is randomly chosen
- Require resampling if O&G exceedence
- Issue NOV if needed
- Set up compliance schedule, with milestones if needed
- Follow-up inspection whenever needed
- Discuss trap or vault installation if needed, City to inspect vault or trap after installation
- Record inspections in database and/or excel file

City of St. Helena
Food Service Grease Trap
Inspection Form

❑ PASS

❑ FAIL

Inspector's Name:	
Date:	

Business Name:	*Manager's Name:*
Business Location:	*Business Phone #:*

Please Circle the correct response for all YES or NO questions.

1. Business Facility sewer is connected to City Sewer System?	YES	NO
2. Grease Trap Installed?	YES	NO
3. Type of Grease Trap Installed? (circle the type)	Below Ground	Under Sink
4. Provide the estimated volume of the Grease Trap measured in gallons:		
5. Provide the estimated level of floating grease inside trap/interceptor (inches)		
6. On what date was the trap/interceptor last cleaned?		
7. Do you include any additives to the traps?	YES	NO
8. If you do add additives, what kind?		
9. Is there a food grinder?	YES	NO
10. Does the food grinder discharge into the grease trap?	YES	NO
11. Is there an automatic dishwasher?	YES	NO
12. Does the automatic dishwasher discharge into the grease trap?	YES	NO
13. How are mats washed?		
14. Do mat washing liquids discharge into the sanitary drain or storm drain?		
15. Is there another language besides English used by staff? What is it?		

Recommendations Made:

❑ Follow-up Inspection required
❑ BMP Fact Sheets provided

Inspector's Signature: _____ *Manager's Signature:* _____ *Date Signed:* _____

NOTE: Grease traps ≤100# with 3 inches or more of grease and/or solids is a violation.
Grease interceptors >100# with 12 inches or more of grease and/or solids on the inlet side is a violation.

LOCATION	NAME	MAILING ADDRESS			PHONE
1026 HUNT AVE	STORES INC 762, SAFEWAY	AP EXPENSE	PO BOX 29097	PHOENIX, AZ 85038	(510)770-2571
1115 MAIN ST	FOODS, SUNSHINE	DALE SMITH	1115 MAIN ST	ST. HELENA, CA 94574	( ) -
1016 MAIN ST	PIZZERIA TRA VIGNE	1074 CALEDONIA ST.	SUITE E	SAUSALITO, CA 94965	(707)967-9999
1400 OAK AVE	COFFEE ROASTING CO., NV	1400 OAK AVE		ST HELENA, CA 94574	( ) -
1234 MAIN ST	PROPERTIES, PAPALE	PO BOX 527		ST. HELENA, CA 94574	( ) -
1310 MAIN ST	COOK ST. HELENA	1310 MAIN ST		ST. HELENA, CA 94574	(707)963-7088
1304 MAIN ST	ASSOCIATES, J & M	ARMADILLOS	1304 MAIN ST	ST. HELENA, CA 94574	( ) -
1345 RAILROAD AVE	MUELLER, JOHN	C/O L. JENSEN	1344 ADAMS ST	ST HELENA,, CA 94574	(707)963-8473
1010 ADAMS ST	LA PRIMA PIZZA,	1010 ADAMS ST		ST. HELENA, CA 94574	(707)963-7909
1347 MAIN ST	MARKET ST. HELENA LLC	ATTN: DOUGLAS KEANE	1347 MAIN ST.	ST. HELENA, CA 94574	(707)963-3889
1313 MAIN ST	GILL, ED	1313 MAIN ST		ST. HELENA, CA 94574	(707)963-1788
1205 MAIN ST	CANTINA INC., ANA'S	1205 MAIN ST		ST. HELENA, CA 94574	(707)942-6313
1336-A OAK AVE	THE BIG DIPPER	ATTN: GREGORY WEIRES	1336A OAK AVE.	ST. HELENA, CA 94574	(707)963-2616
61 MAIN ST	RESTAURNT, GOLDEN HARVEST	61 MAIN ST		ST. HELENA, CA 94574	(707)967-9888
1327 RAILROAD AVE	MERIMONTE NV L.L.C.	1327 RAILROAD AVE		ST. HELENA, CA 94574	(707)963-8631
501 MAIN ST	KFC/A&W	PO BOX 1778	ATTN: WENDELL WAGSTAFF	HANFORD, CA 93232	(707)963-4333
1050 CHARTER OAK	VIGNE, TRA	ATTN: TIFFANY	107 CALEDONIA ST. SUITE E	SAUSALITO, CA 94965	(707)963-4444
1080 MAIN ST	NATURE SELECT FOODS	1080 MAIN ST		ST. HELENA, CA 94574	(707)967-8545
1355 MAIN ST	BAKERY, MODEL	1357 MAIN ST		ST. HELENA, CA 94574	( ) -
1308 MAIN ST	PROPERTIES, PAPALE	PO BOX 527		ST. HELENA, CA 94574	(707)963-1029
1309 MAIN ST	HOTEL, ST. HELENA	ELIZABETH MARTIN TRUST	1309 MAIN STREET	ST HELENA, CA 94574	(707)963-4388
201 MAIN ST	COUNTRY INN, VINEYARD	201 MAIN ST		ST HELENA,, CA 94574	(707)963-1000
1020 MAIN ST	ASSOC II, SULPHER CREEK	900 MEADOWOOD LANE		ST HELENA,, CA 94574	(707)967-9400
1 MAIN ST	HARVEST INN	1 MAIN ST		ST. HELENA, CA 94574	(707)963-9463
1515 MAIN ST	RUNNELLS, JOHN	1515 MAIN ST		ST. HELENA, CA 94574	(707)963-3003
1417 KEARNEY ST	KEEGAN, PAULETTE	1417 KEARNEY ST		ST. HELENA, CA 94574	(707)963-2238
995 ADAMS ST	DISCOVERYLAND	995 ADAMS ST.		ST. HELENA, CA 94574	(707)965-6232
1255 OAK AVE	SCHOOL, ST HELENA PARISH	1255 OAK ST		ST. HELENA, CA 94574	(707)963-4677
1325 ADAMS ST	ST HELENA ELEMENTARY	465 MAIN ST		ST. HELENA, CA 00001	(707)967-2703
1316 HILLVIEW PL	ROBERT LOUIS STEVENSON	465 MAIN ST		ST. HELENA, CA 00001	( ) -
1088 COLLEGE AVE	COLLEGE, NAPA VALLEY	2277 NAPA-VJO HWY.	ATTN: ACCOUNTS PAYABLE	NAPA, CA 94559	(707)253-3000
1701 GRAYSON AVE	ST HELENA PRIMARY SCHOOL	465 MAIN ST.		ST HELENA, CA 00001	( ) -
1425 OAK AVE	MONTESSORI FAMILY CNTR	1425 OAK AVENUE		ST. HELENA, CA 94574	( ) -
100 ST HELENA HY	WINERY, SUTTER HOME	PO BOX 248		ST. HELENA, CA 94574	( ) -
1000 MAIN ST	VINEYARDS, MERRYVALE	1000 MAIN STREET		ST. HELENA, CA 94574	(707)963-2225
1902 MADRONA ST	WINERY, SPOTTSWOODE	1902 MADRONA AVE.		ST. HELENA, CA 94574	(707)963-0134

8.0 System Evaluation and Capacity Assurance Plan

8 System Evaluation and Capacity Assurance Plan

8.1 Capacity Assessment

The City prepared the *Dry Weather Capacity and Reliability Study Report* in 2006 for the Wastewater Treatment and Reclamation Facility (WWTRF). The purpose of this Study was to document the proposed increase in dry weather flow capacity of the WWTRF. The City also performed a collection system analysis in the *City of St. Helena WWTRP Upgrades Project Summary* memorandum (March 23, 2006). This memorandum described the results of analyses conducted to evaluate current and future influent flows to the WWTRP, and the resulting capacity that would be required.

The City's Capital Improvement Plan for the years 2011/12 through 2016/17 includes installation of pipe liners, sealing of manholes, disconnection of existing building drains to reduce infiltration and inflow, replacement of existing lines, construction of new lines, and expansion of existing ones (See detailed description of projects in Section 6.2).

8.2 System Evaluation and Capacity Assurance Plan

As noted above and in Section 6 (Measures and Activities), specific projects budgeted in the Capital Improvement Plan include installation of pipe liners, sealing of manholes, disconnection of existing building drains to reduce infiltration and inflow, replacement of existing lines, construction of new lines, and expansion of existing ones.

9.0 Monitoring, Measurement, and Program Modifications

9 Monitoring, Measurement, and Program Modifications

The intention of this section is to monitor the effectiveness of each SSMP element and update and modify SSMP elements to keep them current, accurate, and available for audit as appropriate. One way to track the effectiveness of each SSMP element is to use performance indicators. Performance indicators will be used during the audit process to determine any deficiencies in the SSMP. Examples of performance indicators that will be used to assess the SSMP include:

- Number of SSOs over the past 12 months
- Volume distribution of SSOs
- Volume of SSOs contained versus total volume
- SSOs by cause (roots, grease, debris, etc.)
- Stoppages by cause

Status updates as of April 2014 (Version 5 of the SSMP) for each of the SSMP sections can be found below. Note that the sections have been reordered to match the order of the SSMP requirements in Provision D.13 (i) through (xi) of the 2006 Statewide WDR.

1 Goals

The City of St. Helena's goals still include the proper management, operation, and maintenance of all parts of the wastewater collection system, adequate capacity to convey peak flows, minimizing frequency of SSOs, and mitigating the impact of SSOs.

2 Organization

The City's organization chart and roles have been updated to show the roles of the Assistant Public Works Director and the Senior Management Analyst. Language was also added to clarify that the names and contact information for responsible staff is kept on file at the Public Works office.

3 Legal Authority

The City's Sewer Service and Wastewater Discharge Ordinances demonstrate the City's legal authority to control infiltration and inflow (I/I) and to require proper construction, testing and inspection of their sewer system. No changes have been made to these ordinances since the last version of the SSMP.

4 Operation and Maintenance Program

4.1 Collection System Map

A map of the City's collection system is maintained and updated periodically based on the Sewer System Supervisor's guidance. The map is current and updates will be made once CCTV inspections of the collection system are complete.

4.2 Prioritized Preventive Maintenance

The July 2000 I/I Analysis recommended that the City use smoke testing, flow isolation, manhole inspections, and source defect/cost benefit analyses to reduce the amount of I/I entering the system during wet weather. The Spring 2007 Sewer Flow Isolation Study

recommended manhole and CCTV inspections and the City is using this information to prioritize system rehabilitation.

4.3 Rehabilitation and Replacement

An approach has been developed for inspecting, cleaning and video-taping the entire system. As of April 2014, approximately 70% of the system has been video-inspected. Inspections are scheduled to resume in June 2014 with anticipated completion by the end of 2015. This section was also updated to reflect the current CIP for years 2010/11 to 2016/17.

4.4 Contingency Equipment and Replacement Inventories

Recent equipment purchases include a new hydroflushing unit in 2008 and a new CCTV camera in 2012.

4.5 Training

The Collection System Operation Team continues to participate in several trainings per year.

5 Design and Performance Provisions

5.1 Standards for Installation, Rehabilitation, and Repair

Section 6 of the City of St. Helena Water and Sewer Standards includes design criteria as that are periodically reviewed, and updated as necessary. No updates have been made since the last version of the SSMPin the past year.

5.2 Standards for Inspection and Testing of New and Rehabilitated Facilities

The City is currently adding to theirThe Sanitary Sewer System Standards have been updated to include a requirement for a CCTV inspection prior to accepting a lateral or issuing a Certificate of Occupancy for a new connection.

6 Overflow Emergency Response Plan

The City's Sewer Overflow Response Plan was updated to include recommendations from the 2014 Internal SSMP Audit.

7 Fats, Oils, and Grease (FOG) Control Program

The City continues to identify and clean sections of the sewer system that are subject to grease blockages. The City continues to distribute materials regarding source control activities to educate local businesses about FOG control. Random inspections and inspections upon notice of an issue continue to take place. This section was updated to note that all restaurants and food establishments are subjected to an annual Health, FOG, Stormwater inspection by the Napa County Department of Environmental Management.

8 System Evaluation and Capacity Assurance Plan

8.1 Capacity Assessment

The City is moving forward with upgrades to the plant to increase capacity from 0.5 mgd to 0.8 mgd.

8.2 System Evaluation and Capacity Assurance Plan

The City continues to perform system-wide upgrades with tasks such as installation of pipe liners, sealing of manholes, and disconnection of existing building drains to reduce infiltration and inflow, replacement of existing lines, and construction of new lines.

10 SSMP Program Audits

The City completed an internal SSMP Audit in April 2014. This version of the SSMP (Version 5, updated April 2014) includes revisions based on the audit's recommendation.

11 Communication Program

The section was updated to note that the SSMP is published online. No other revisions are needed at this time.

10.0 SSMP Audits

10 SSMP Program Audits

The City completes a review of the SSMP every two years, or more often as needed based on the number of overflows. The audit evaluates the SSMP effectiveness and identifies any deficiencies and steps to correct them. This current SSMP update (Version 5) includes recommendations from the most recent internal audit conducted in April 2014.

11.0 Communication Program

11 Communication Program

The City maintains a website (http://www.ci.st-helena.ca.us/) to inform the public about City activities. The City's website is an effective communication channel for providing alerts and news to the public. The main page of the website provides important announcements, public hearings notices, links to agendas and minutes for City Council meetings, and other key information for City residents. The SSMP is published on the Public Works Department page of the City website. The City will also use the website to notify the public of important upcoming activities related to sewer system management, its development, and implementation, and performance.

The City does not have any tributary or satellite collection systems; there is no need to establish communication protocols with any such agencies.